3

01 / 2024

SPRO PARTS

MACHINES COMPONENTS AND ACCESSORIES

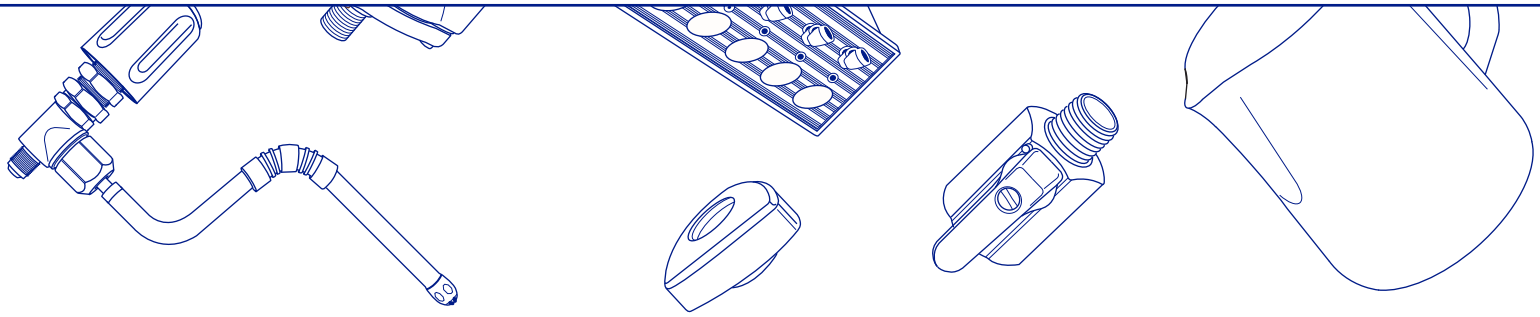

MACCHINE CAFFE' • COFFEE MACHINES

Astoria /CMA ..... 3 - 17
Aurora- Brugnetti ..... 18 - 21
Bezzera ..... 22 - 31
BFC - ROYAL ..... 32 - 41
Brasilia ..... 42 - 54
Carimali ..... 55 - 60
Casadio ..... 61 - 68
Cimbali ..... 69 - 81
Cime ..... 82 - 88
Coffee Queen / Crem ..... 89 - 90
Conti ..... 91 - 97
Dalla Corte ..... 98 - 102
ECM ..... 103 - 110
ECM DE ..... 111 - 121
Elektra ..... 122 - 134
Expobar ..... 135 - 141
Faema ..... 142 - 175
Fiamma RST ..... 176 - 183
Futurmat - Ariete ..... 184 - 189
Gaggia ..... 190 - 197
Isomac ..... 198 - 199
La San Marco ..... 200 - 208
La Spaziale ..... 209 - 217
Nuova Simonelli ..... 218 - 227
Pavoni ..... 228 - 239
Profitec ..... 240 - 252
Promac ..... 253 - 257
Rancilio ..... 258 - 270
Rocket ..... 271 - 283
Sanremo ..... 284 - 296
Sipresso 297
Vibiemme ..... 298 - 319
Victoria Arduino ..... 320 - 327
Wega ..... 328 - 338

RICAMBI E MACINE PER MACINADOSATORI • SPARE PARTS AND GRIDSTONES FOR COFFEE GRINDERS

Anfim ..... 339 - 348
Bnz 349
Compak 350
Eureka ..... 351 - 359
Faema ..... 360 - 361
Fiorenzato ..... 362 - 363
H 5 364
HC 600 365
HC 700 366
La San Marco ..... 367 - 370

Macap ..... 371 - 377
Mazzer ..... 378 - 385
Nuova Simonelli ..... 386 - 387
Obel ..... 388 - 392
Quamar ..... 393 - 396
Rancilio ..... 397 - 398
Rossi ..... 399 - 400
Lux-Delux 401
Adattatori Macinacaffè - *Grinders Adaptors* ..... 402 - 403
Elenco Macine - *Grindstones List* ..... 404 - 409

TRATTAMENTO ACQUA • WATER TREATMENT

Addolcitori manuali - *Manual water softeners* ..... 410 - 411
Addolcitori automatici - *Automatic water softeners* 412
Filtri addolcitori casa e resine - *Water softeners home filters and resin* 413
Cartucce filtranti - *Filtering Cartridges* ..... 414 - 417
Ricambi addolcitori - *Water softeners spare parts* ..... 418 - 419

RICAMBI UNIVERSALI • UNIVERSAL SPARE PARTS

Articoli Manutenzione - *Maintenance equipment* ..... 420 - 422
Beccucci - *Spouts* 423
Detergenti per macchine da caffè - *Coffee machine cleaning products* ..... 424 - 426
Detergenti - *Cleaning products* 427
Elettrovalvole - *Solenoid valve* ..... 428 - 432
Gas 433
Gruppi completi - *Complete groups* ..... 434 - 436
Parti elettriche ed eletroniche - *Electrical and electronic parts* ..... 437 - 439
Parti Scaldatazze - *Cupwarmer Parts* 440
Piedini - *Feet* 441
Pompe e Motori - *Pumps and motors* ..... 442 - 451
Portafiltri - *Filter holders* 252
Portafiltri per capsule - *Capsule Filterholder* ..... 453 - 455
Portafiltri Senza Fondo Completi - *Complete naked filter holders* ..... 456 - 457
Portafiltri Cialde e Portafiltri Teflonati - *Portafilters for pods and teflon coated filter holder* 458
Pressostati - *Pressure Switches* ..... 458 - 459
Raccordi - *Fittings* ..... 460 - 463
Rubinetti - *Valves* ..... 464 - 466
Tubi - *Pipes* ..... 467 - 468
Valvole sicurezza - *Safety valves* 469
Pressini automatici - *Automatic tampers* 470

ASTORIA / CMA

Tav.01

GRUPPO/GROUP Ø53

CORE600 - SABRINA

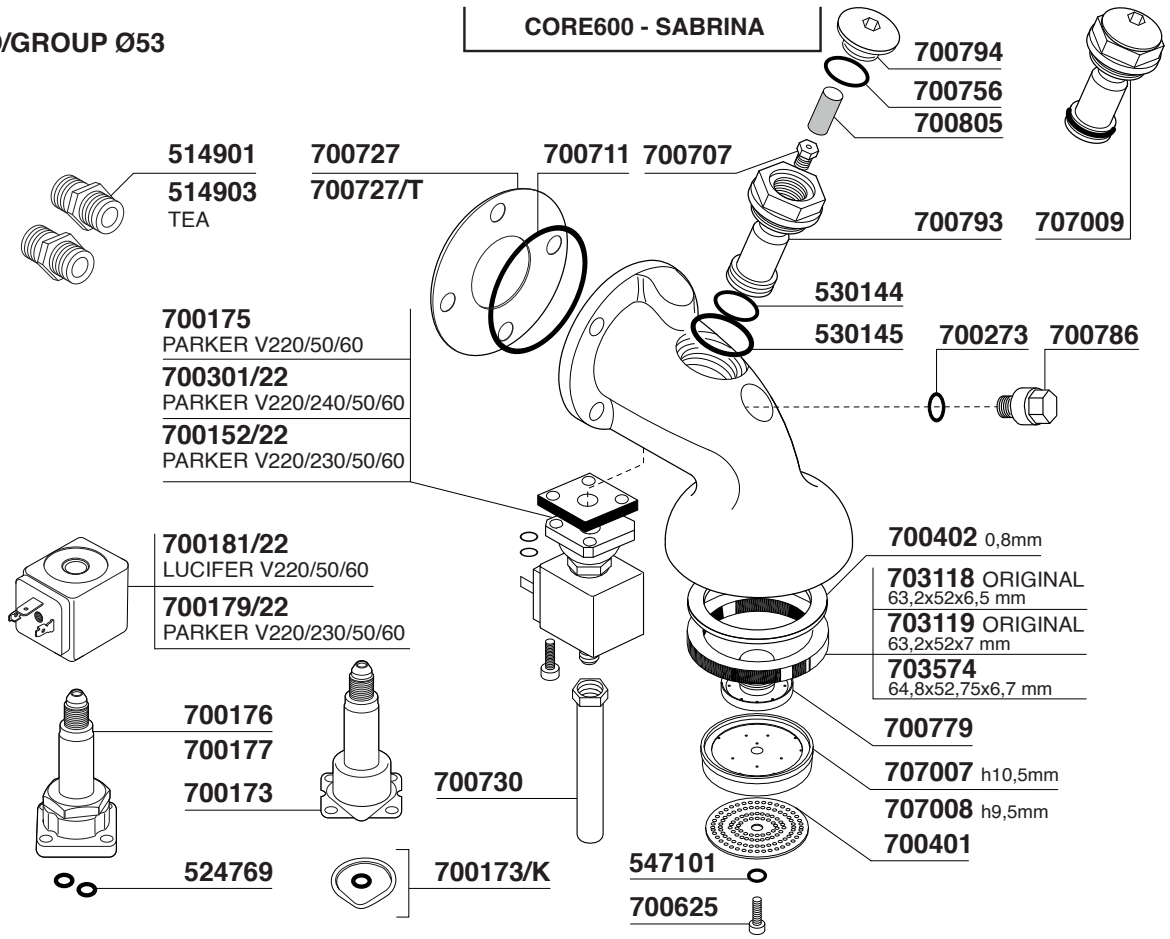

GRUPPO/GROUP Ø58

RAPALLO - CORE600 - SIBILLA
SABRINA - GRETA - GLORIA
CALYPSO - PERLA - DIVINA

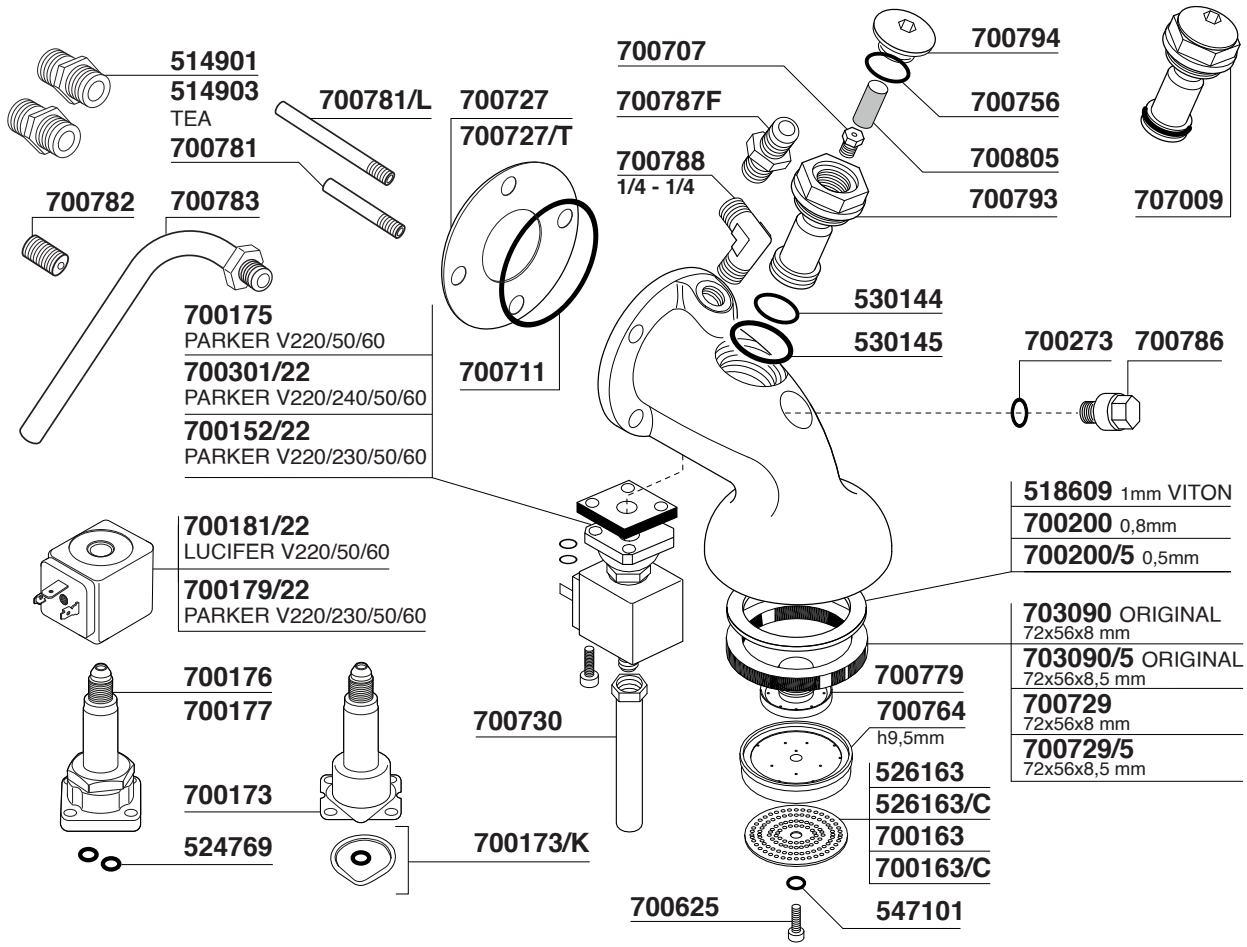

ASTORIA / CMA

Tav. 02

ARGENTA - BRAVA - DORA - LISA - PRATIC

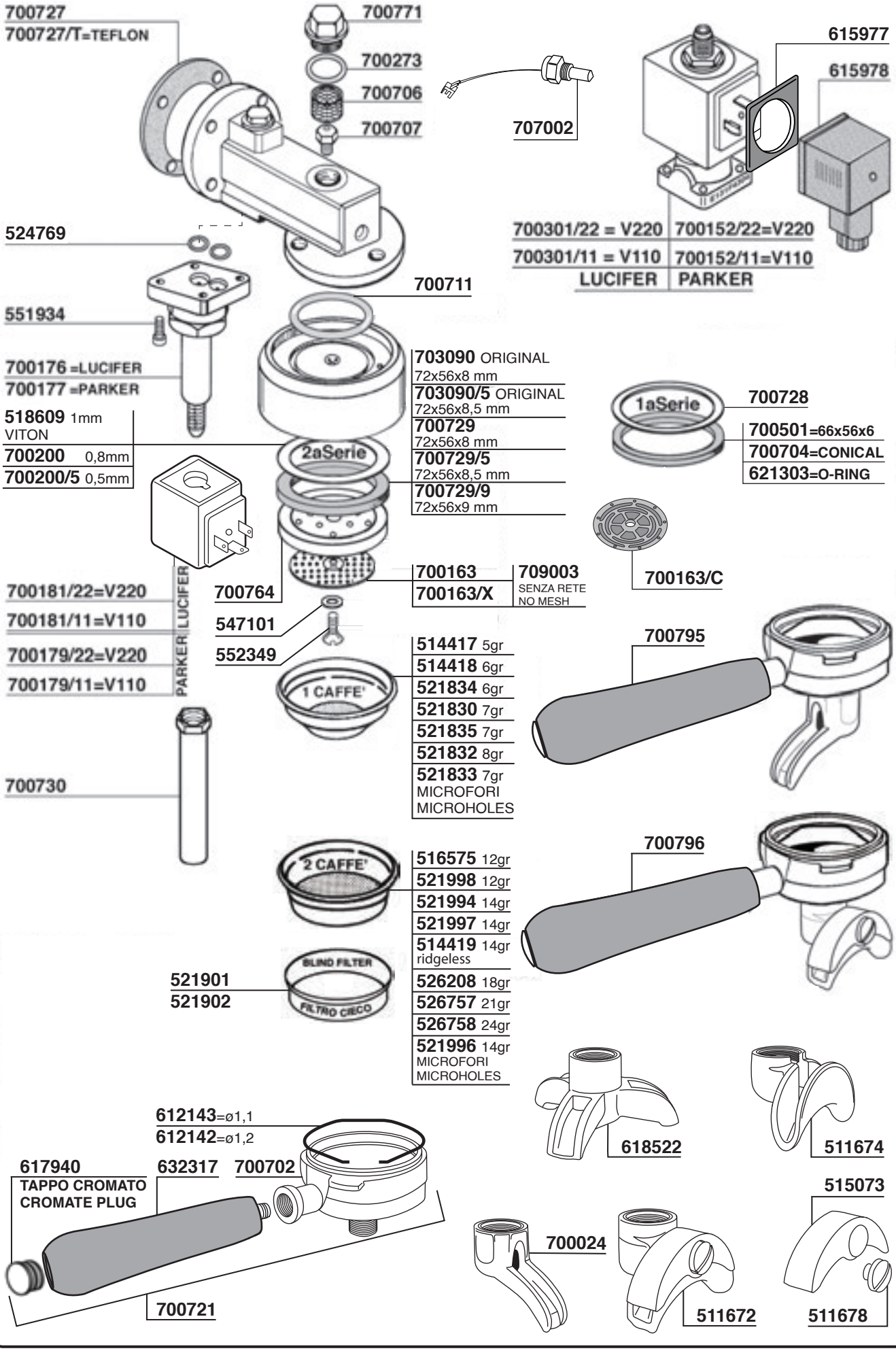

ASTORIA / CMA

Tav. 03

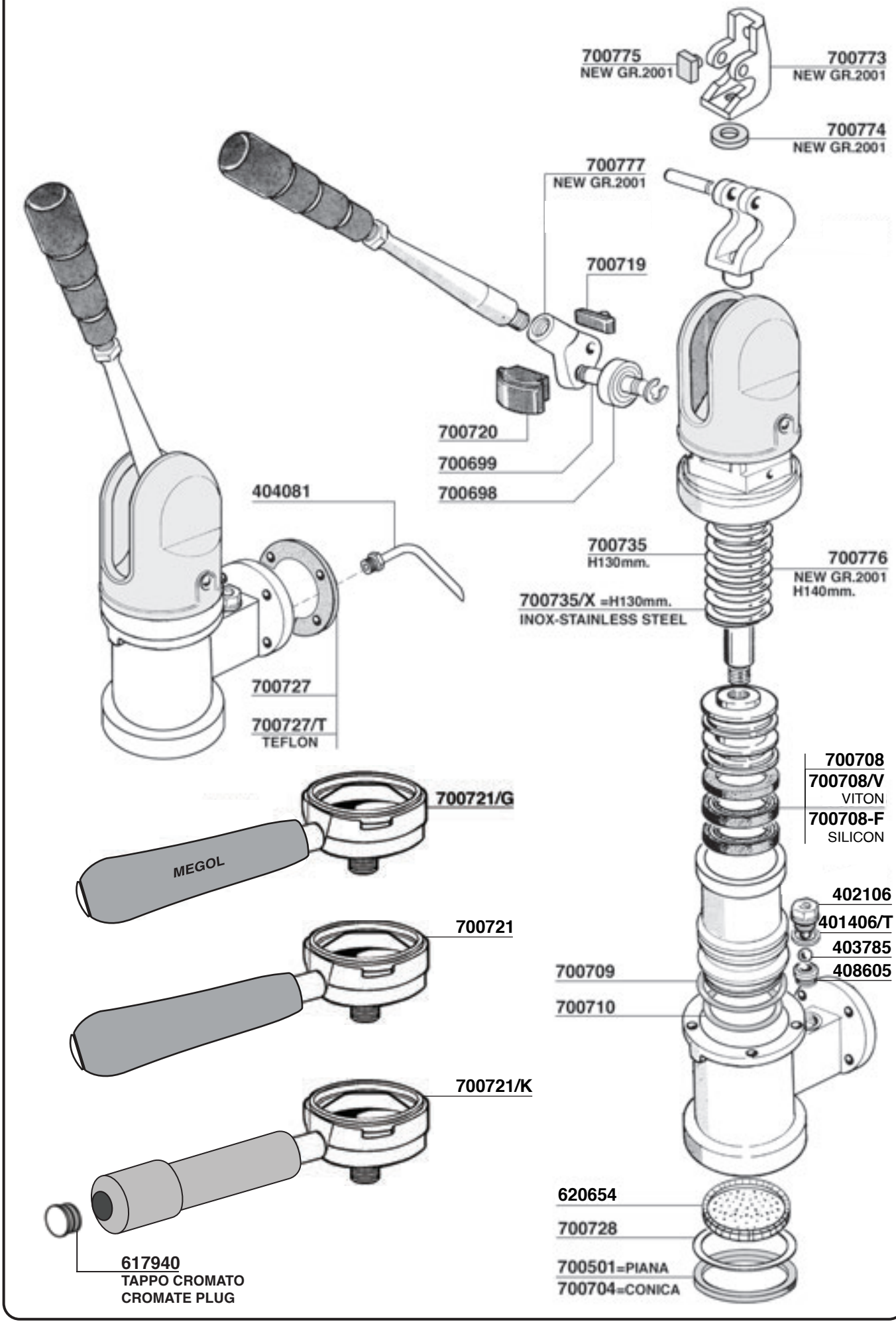

ASTORIA / CMA

Tav. 04

GLORIA P4Y - P4Y - P4YTS

GRUPPO/GROUP Ø53

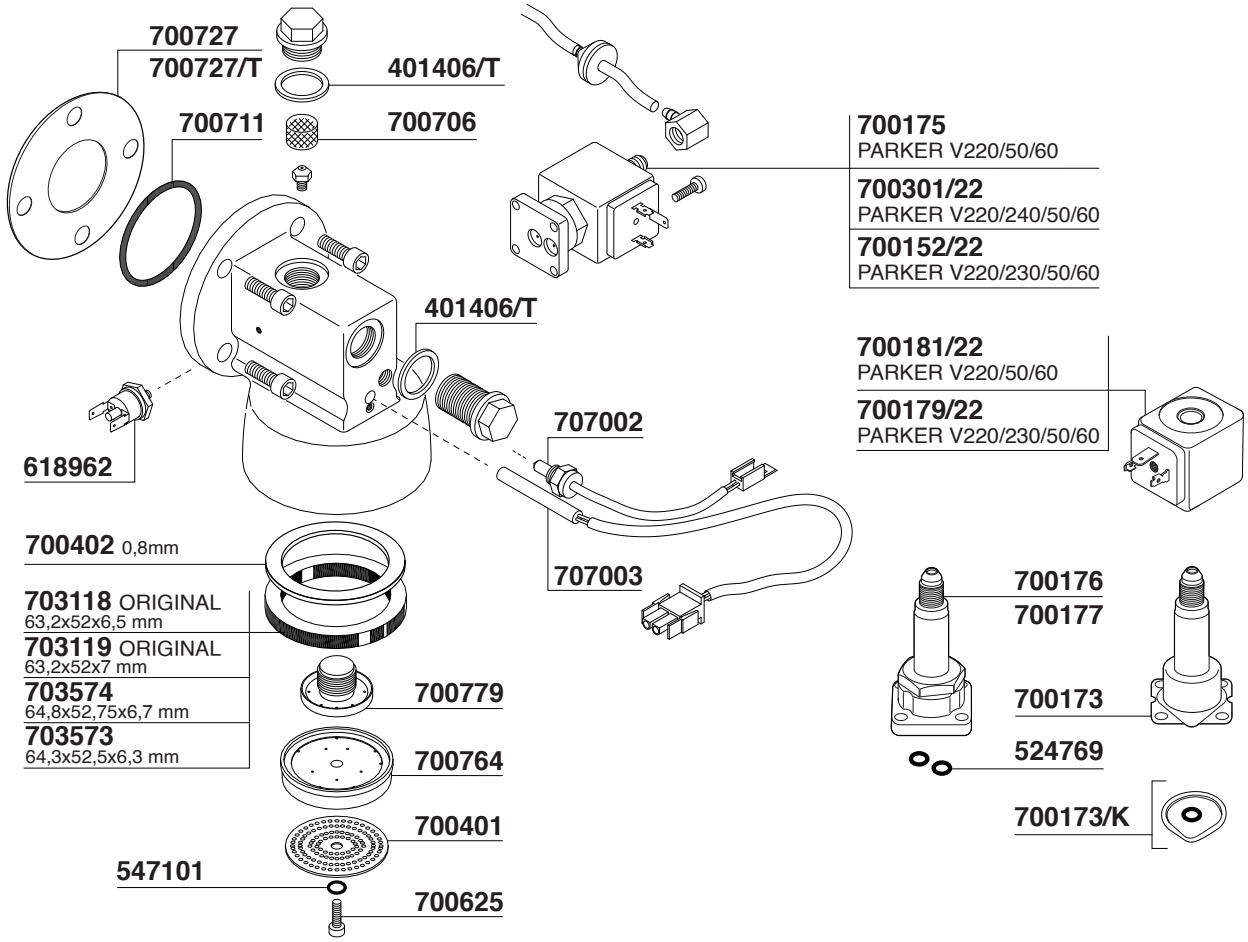

SABRINA P4Y - GLORIA P4Y - P4Y - P4YTS - STORM

GRUPPO/GROUP Ø58

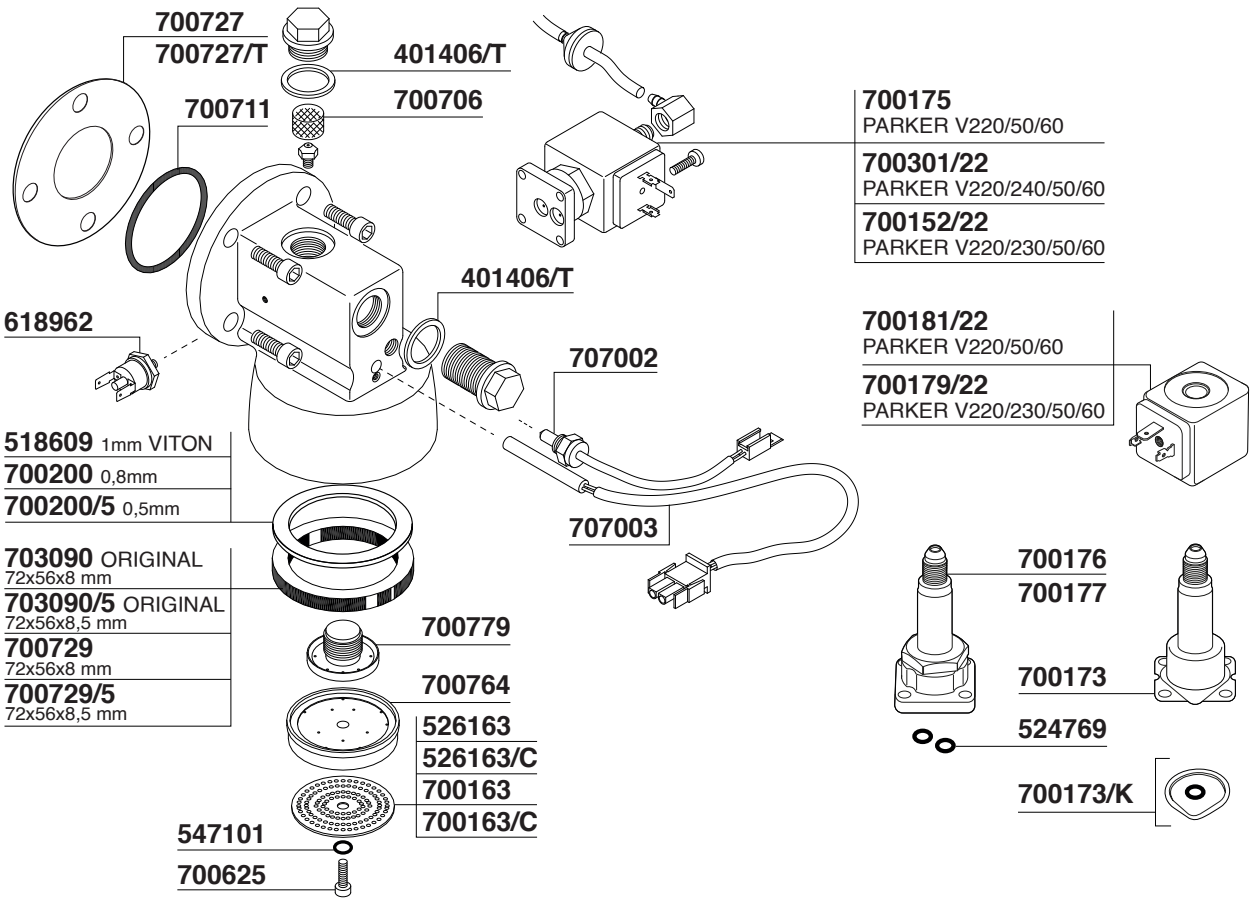

GRUPPO/GROUP Ø58 PORTAFILTRO PROFONDO/DEEP PORTAFILTER

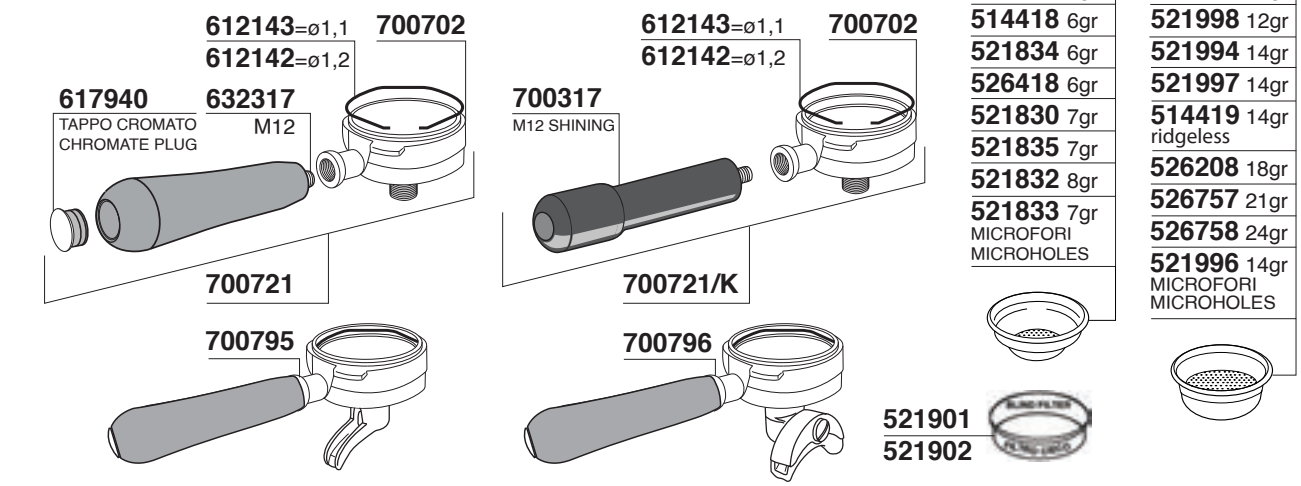

GRUPPO/GROUP Ø58 PORTAFILTRO BOMBATO/CONVEX PORTAFILTER

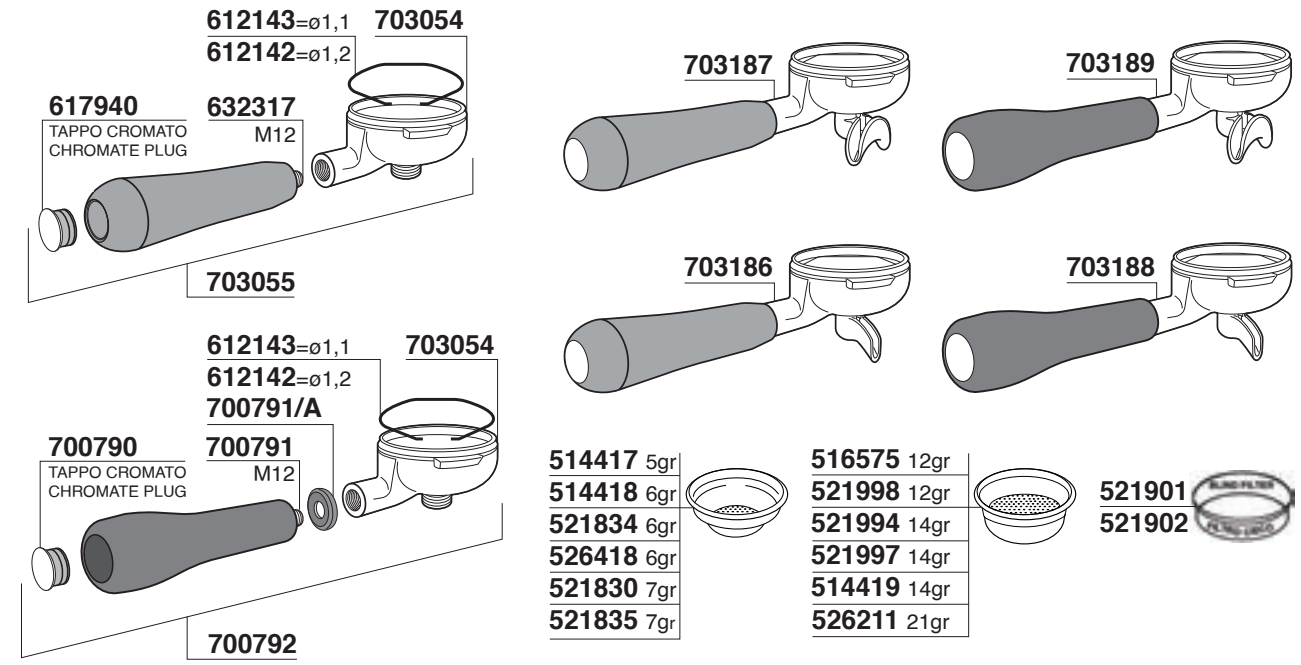

GRUPPO/GROUP Ø53

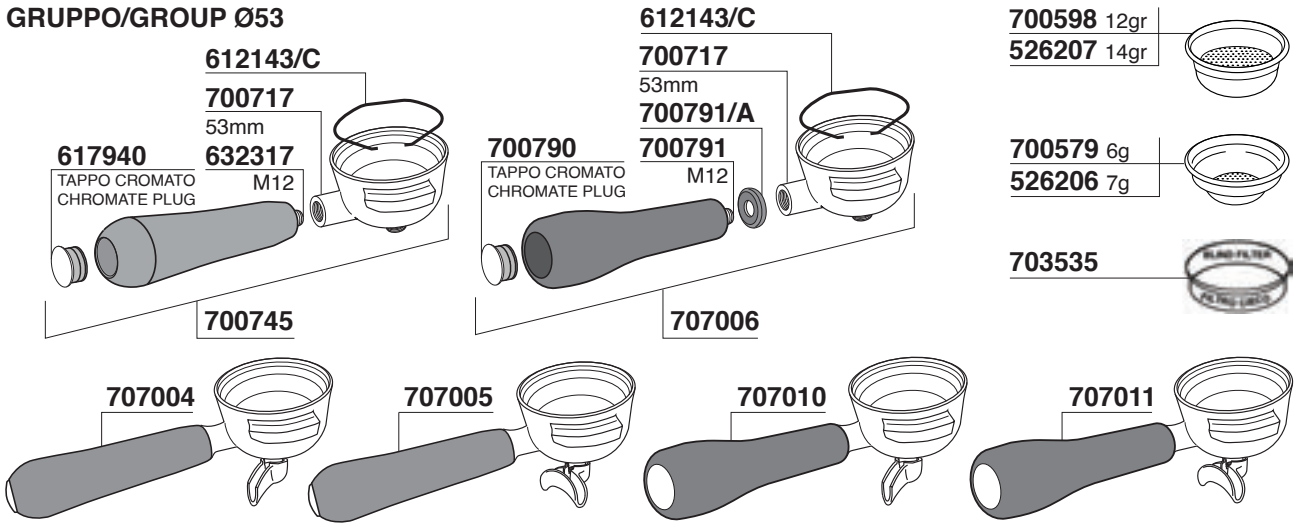

703190	703191	511674	511675	511672	630085/8	630086/8	511672/R	700024	618522	502003
ORIGINAL 3/8	ORIGINAL 3/8	3/8	3/8	3/8	3/8	3/8	3/8	3/8	3/8	3/8

ASTORIA / CMA

Tav. 06

8

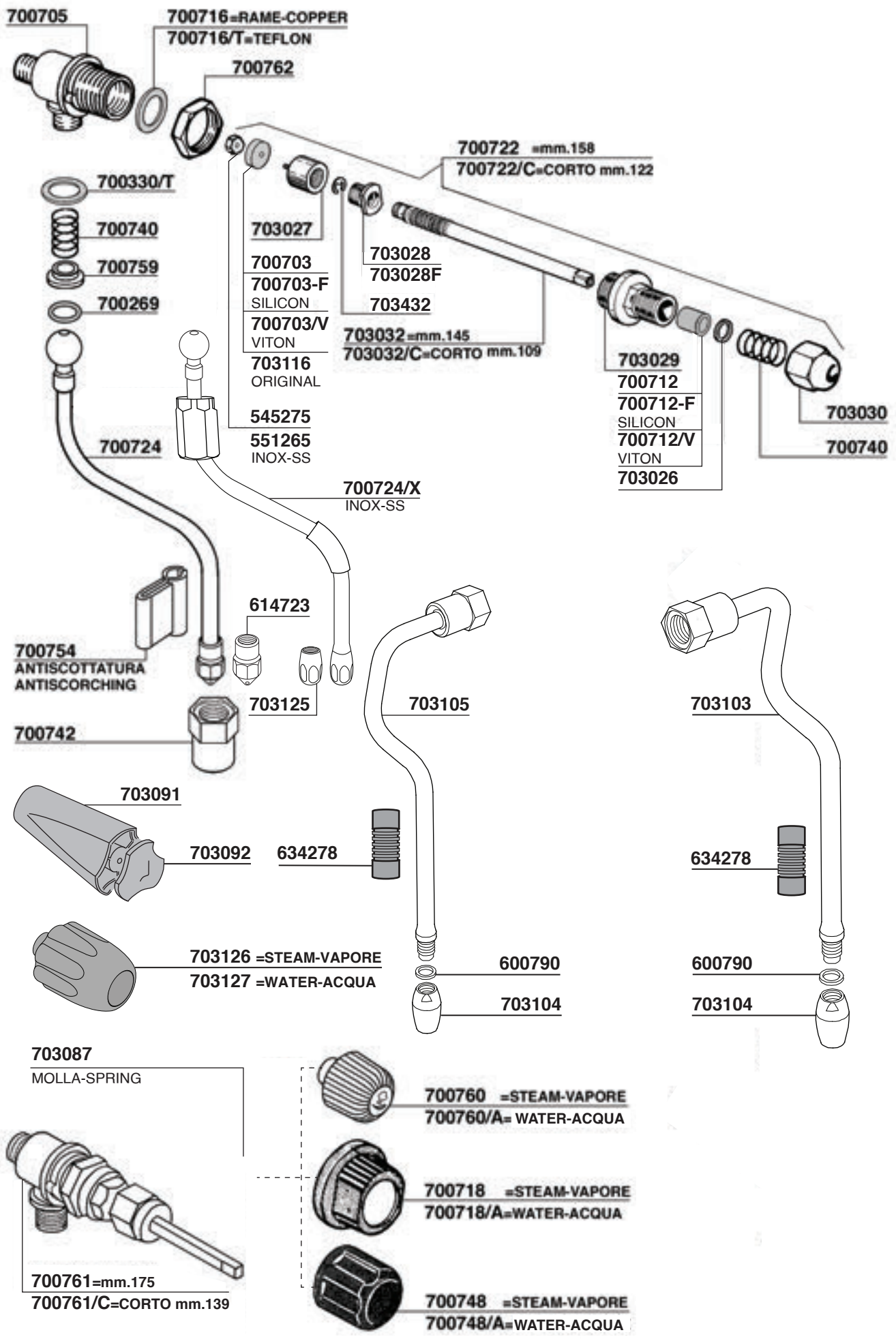

ASTORIA / CMA

Tav. 07

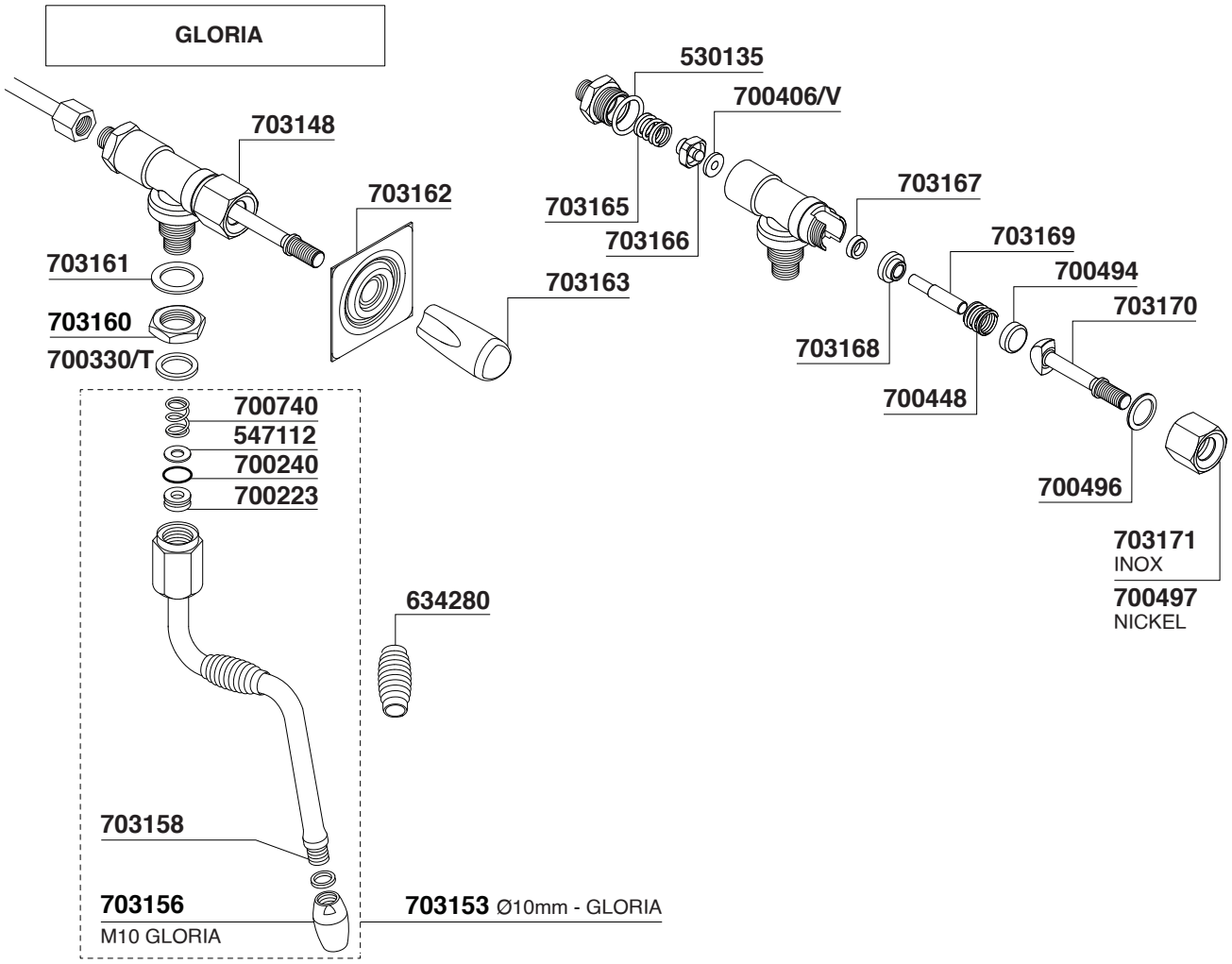

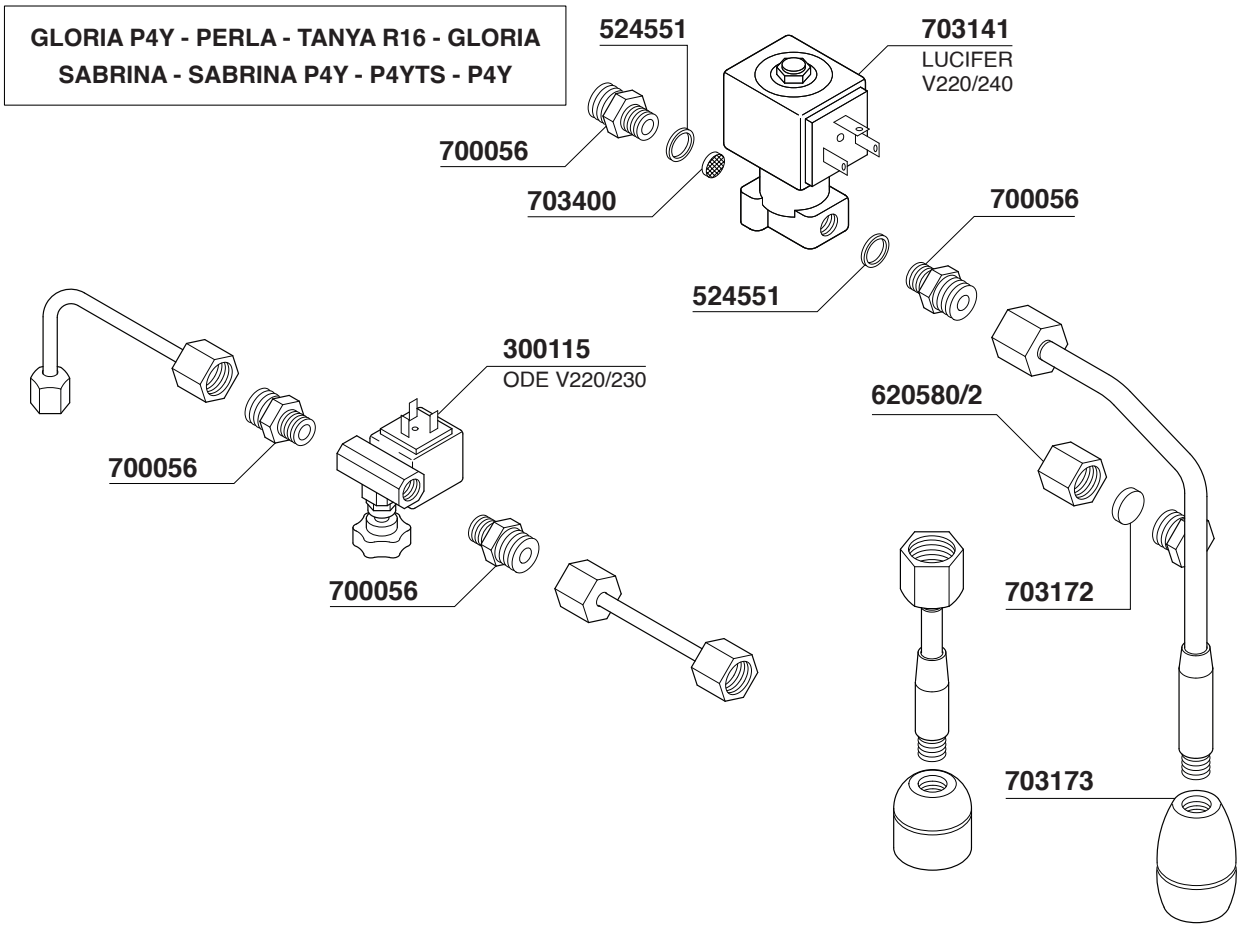

ASTORIA / CMA

Tav. 08

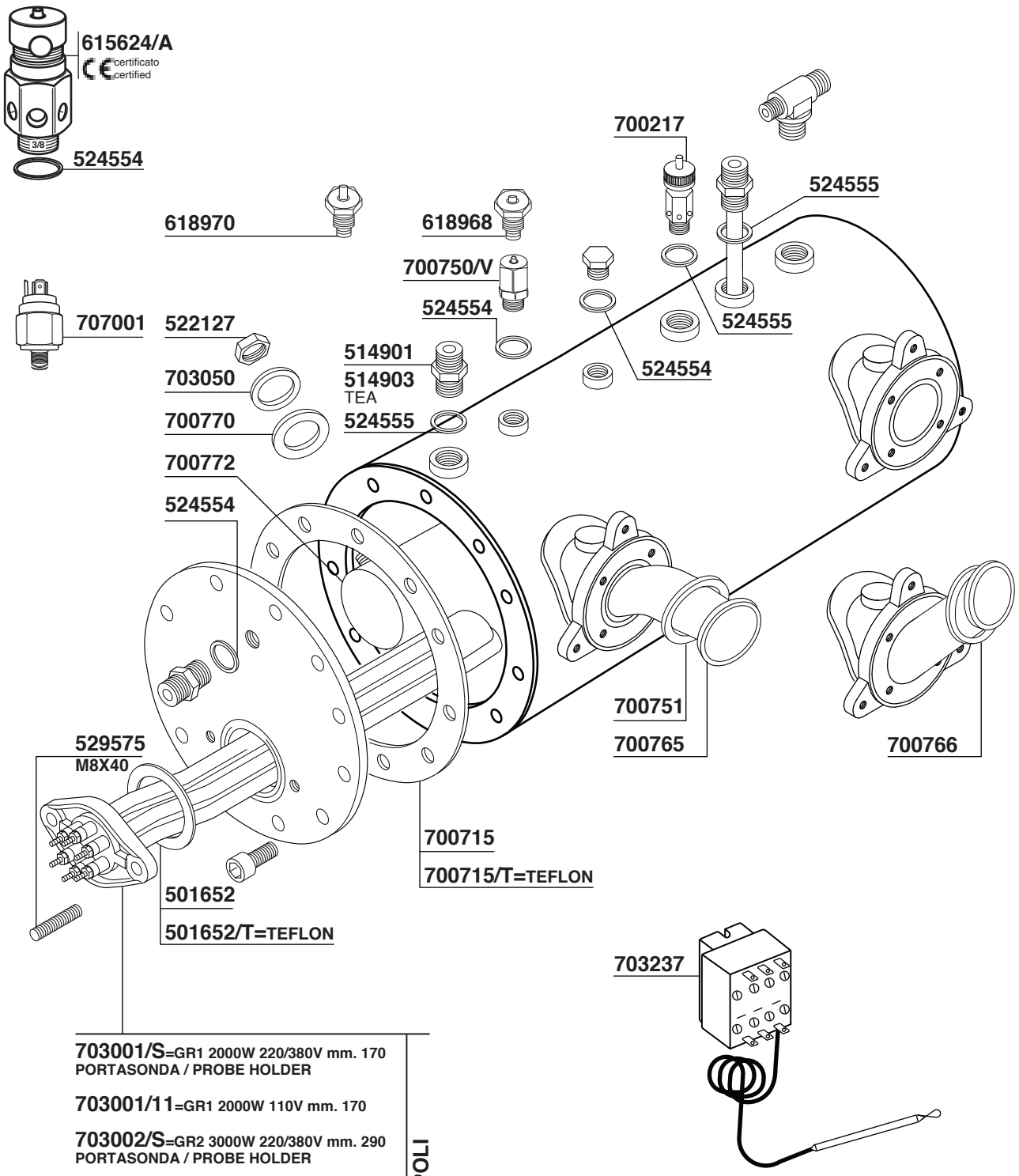

703001/S=GR1 2000W 220/380V mm. 170 PORTASONDA / PROBE HOLDER	6 POLI
703001/11=GR1 2000W 110V mm. 170	
703002/S=GR2 3000W 220/380V mm. 290 PORTASONDA / PROBE HOLDER	
703003/S=GR3 3700W 220/380V mm. 570 PORTASONDA / PROBE HOLDER	
703004/S=GR3/4 5000W 230/400V mm. 540 PORTASONDA / PROBE HOLDER	
703069=GR2 4500W 220/380V mm.310	
700731/22=GR1 2000W 220V mm. 160	4 POLI
700731/11=GR1 1700W 110V mm. 175	
700732/22=GR2 2600W 220V mm. 305	
700778/S=GR3 3700W 220V mm. 515 PORTASONDA / PROBE HOLDER	
633092=GR3/4 6500W 220V mm. 500	

ASTORIA / CMA

Tav. 09

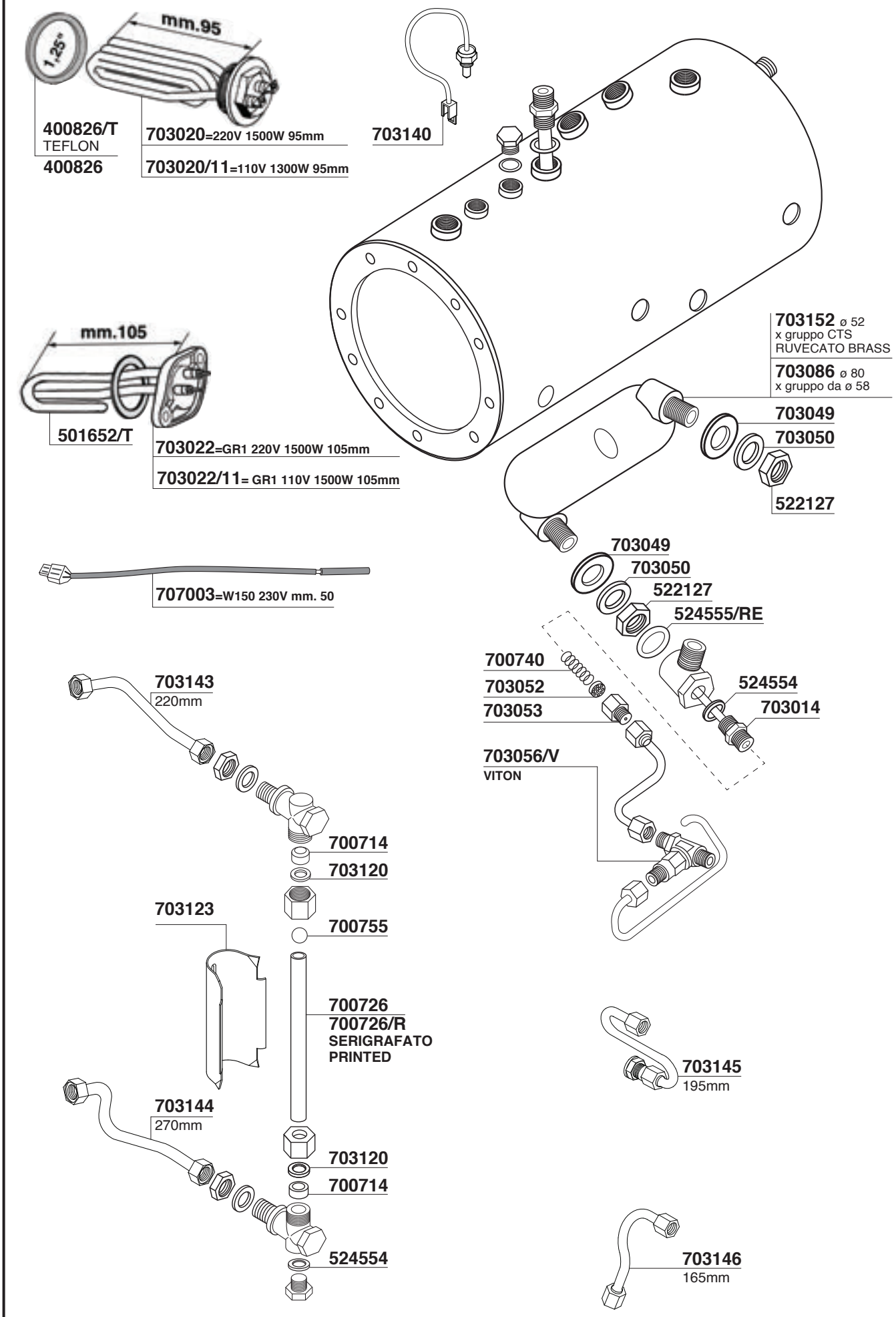

CALDAIA SERVIZI / SERVICE BOILER

GLORIA P4Y - SABRINA P4Y
P4YTS - P4Y - STORM

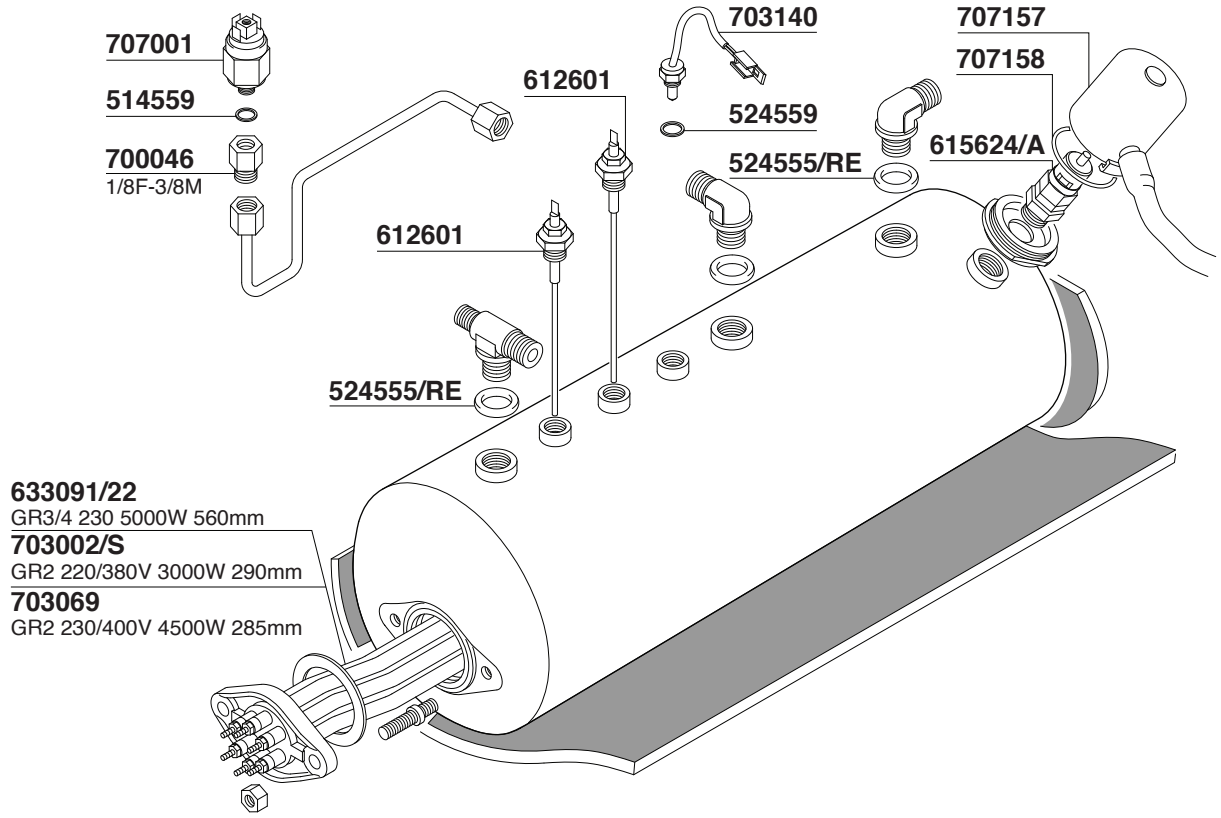

CALDAIA CAFFE' / COFFEE BOILER

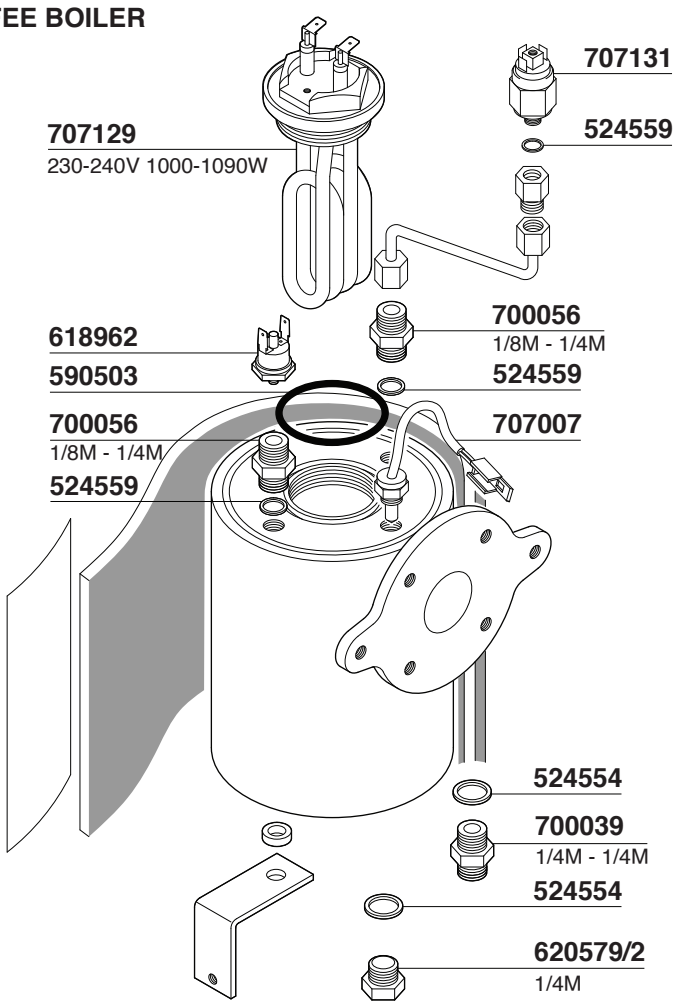

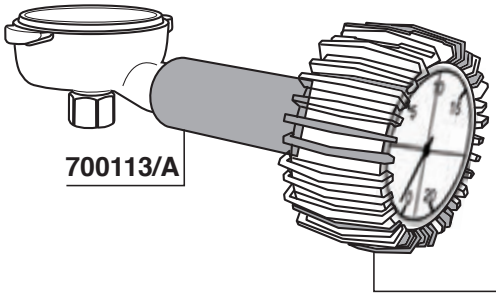

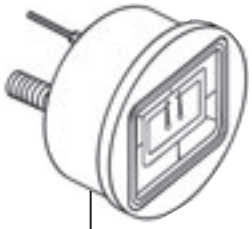

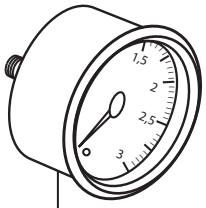

700701 =2 SCALE Ø63
700768 =1 SCALA Ø63

703147 Ø51,5
1 SCALA

MOTORE RAFFREDDATO AD ACQUA - MOTOR WATERCOOL

621112
700182
700182
700182
115 mm
140 mm
135 mm
514902
514902/X
524555
514901
514903 TEA
524555
700048
703024
700050
703023
MOTOR V220
703023/11
MOTOR V110
700008 PROCON
700008/X INOX
STAINLESS STEEL

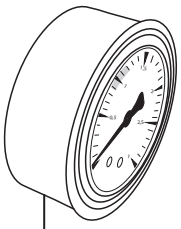

703102 Ø62

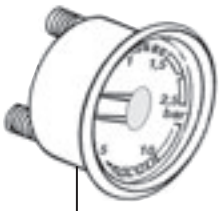

700411 Ø60

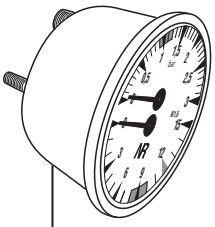

703083 Ø63

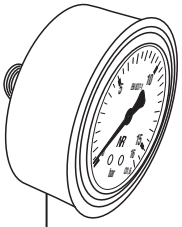

703084 Ø63

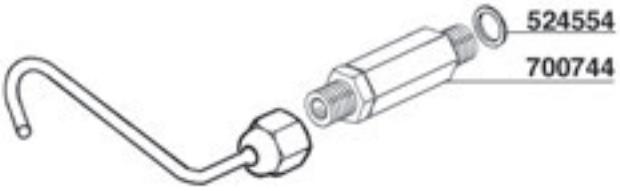

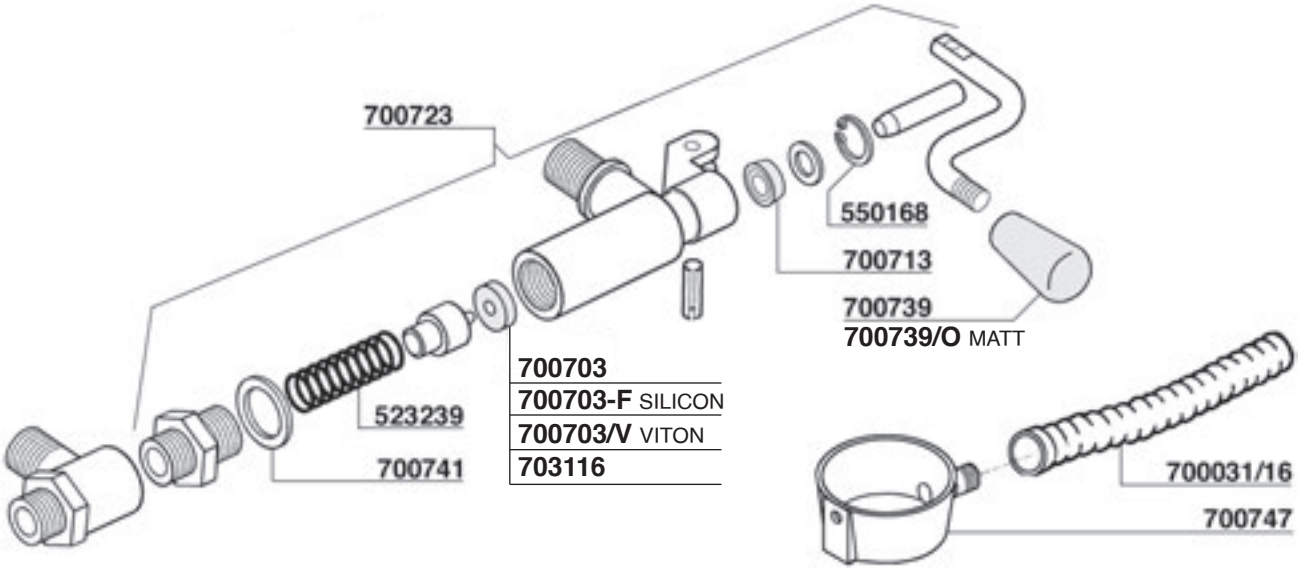

ASTORIA / CMA

Tav. 12

700429

703025
32A 0-1-2

RL30/1E-2CF
GICAR

AUTOLIVELLO - AUTOFILL
700737 220V
GICAR CODE 9.1.40.71G
700737/11 110V
GICAR CODE 9.1.40.70G

617902

613656

615978/T

617903/G

530148

700769
32A 0-1

551937

700574=V220
700574/11=V110

620405

GICAR

703007

RL30/1E-2C/11
GICAR

700749
20A 0-1

617902

620405/C

703082

620405

400835

703052

703151

703142

703150

524554

700648/22 =V230/50/60
700648/24 =V240/50/60

703122

401920

700464

615978/T

615979

530148

617903

551937

700621

616602/22 =V220
616602/11 =V110

615978/P

LUCIFER

703141
V220/240

616597 CE/UL

616592 CE
SIRAI

707002

612601
120mm

700662

524554

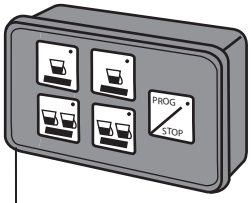

700752
PULSANTIERA
TOUCHPAD

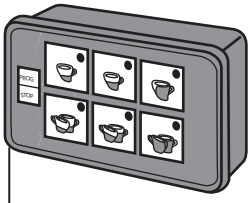

703070
PULSANTIERA - TIMER
TOUCHPAD - TIMER

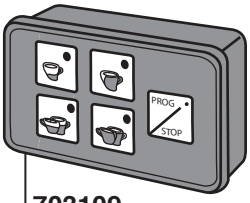

703109
PULSANTIERA
TOUCHPAD

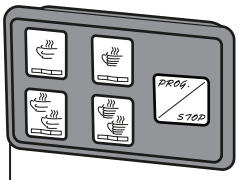

703121
PULSANTIERA
TOUCHPAD

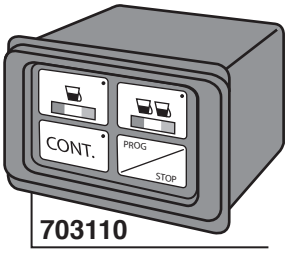

703110
PULSANTIERA - TIMER
TOUCHPAD - TIMER

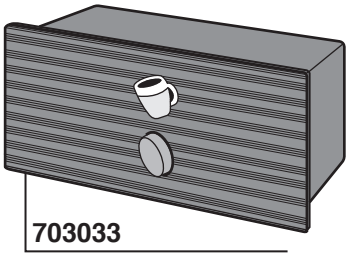

703033
PULSANTIERA MANUALE
MANUAL TOUCHPAD

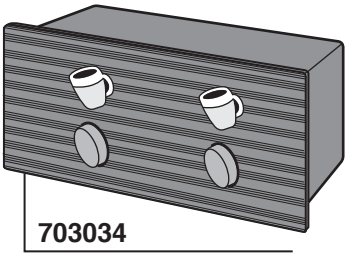

703034
PULSANTIERA MANUALE
MANUAL TOUCHPAD

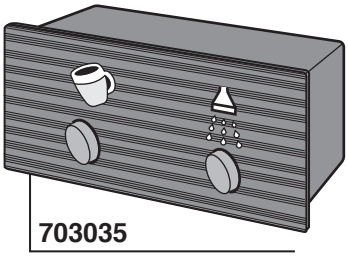

703035
PULSANTIERA MANUALE
MANUAL TOUCHPAD

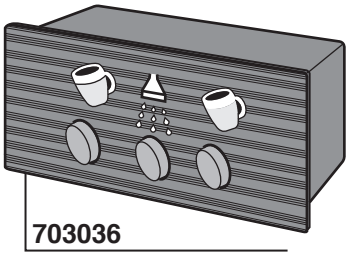

703036
PULSANTIERA MANUALE
MANUAL TOUCHPAD

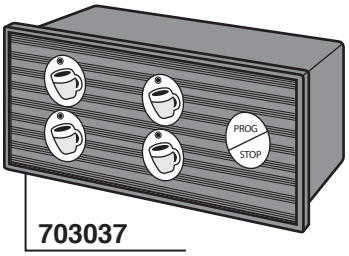

703037
PULSANTIERA
TOUCHPAD

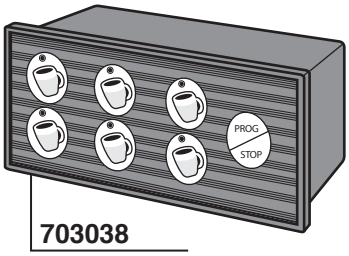

703038
PULSANTIERA
TOUCHPAD

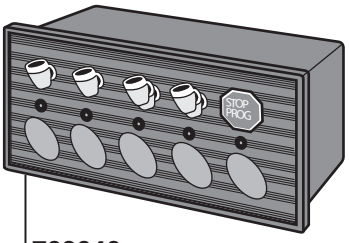

703040
PULSANTIERA - THE' - LIVELLO
TOUCHPAD - TEA - LEVEL

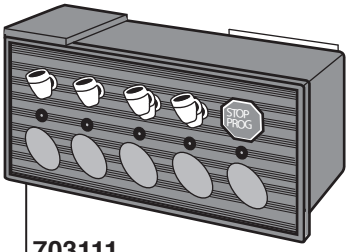

703111
PULSANTIERA
TOUCHPAD

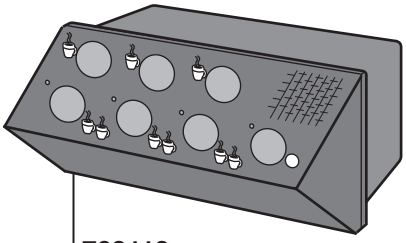

703112
PULSANTIERA
TOUCHPAD

ASTORIA / CMA

Tav. 14

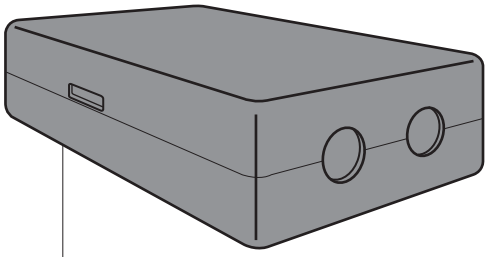

703041 230V
703042 120V
CENTRALINA DIVINA 1/2/3 GRUPPI
DIVINA ELECTRONIC BOX 1/2/3 GROUPS

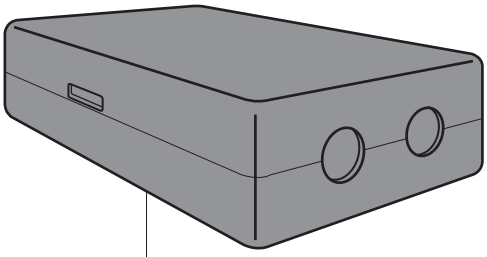

703100 1-3GR 230V PLUS1
703101 1-4GR PLUS2 GICAR CODE 9.5.21.40 G00
703106 1-3GR 230V PLUS3
703006 1/2/3 GR 230V LISA OLD / ARGENTA

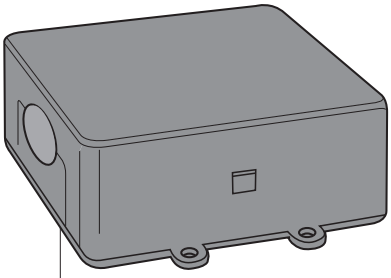

703099
GICAR CODE 9.5.24.21 G

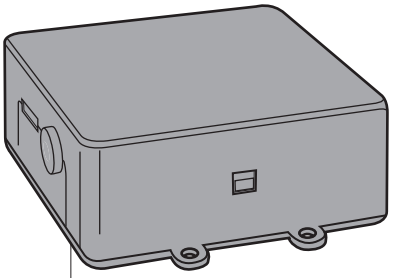

703073

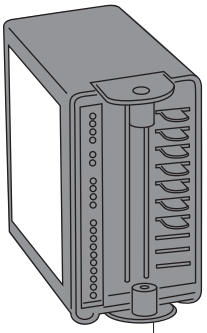

703107
GICAR CODE 9.5.37.08 G01
703108
GICAR CODE 9.5.37.07 G01

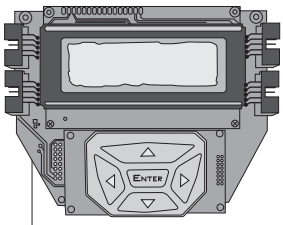

700799
DISPLAY P4Y-09

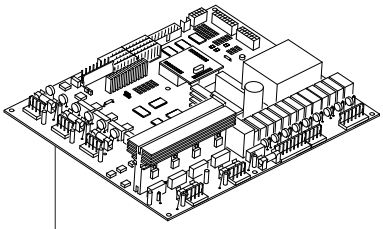

707000 1-4 GR 230V P4U

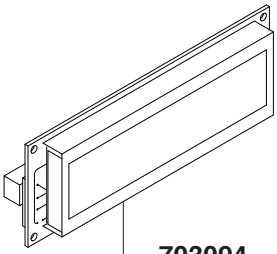

703094

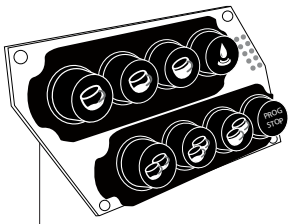

700797
P4U SX/LF

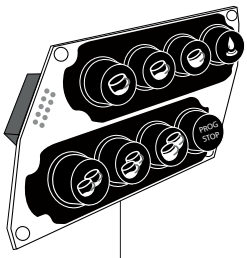

700798
P4U DX/RH

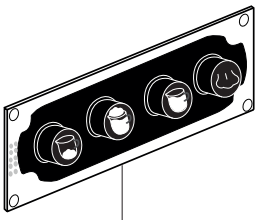

700746
AUTOSTEAMER

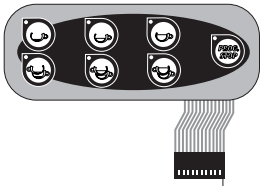

703114

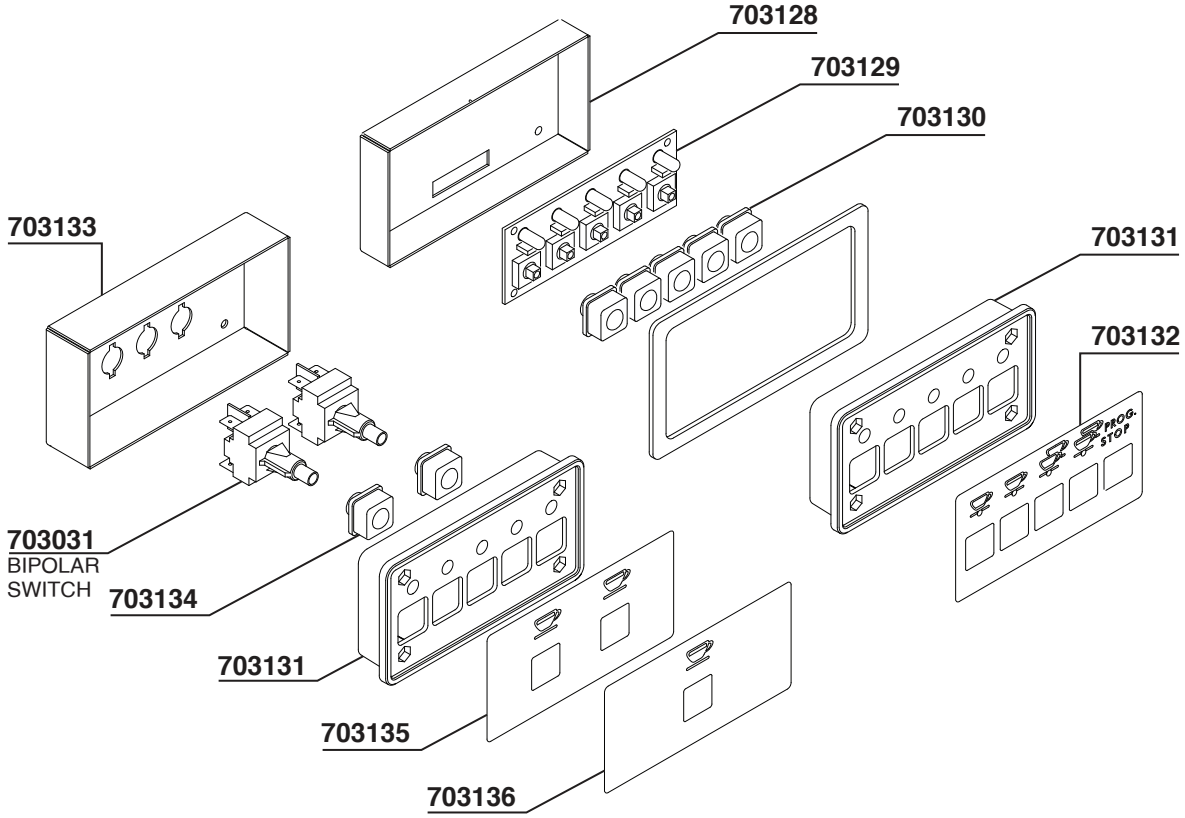

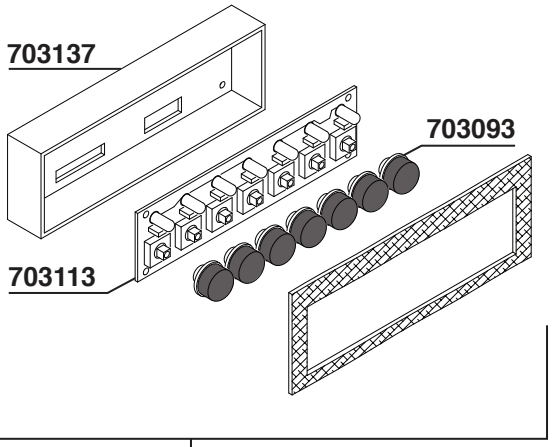

703138

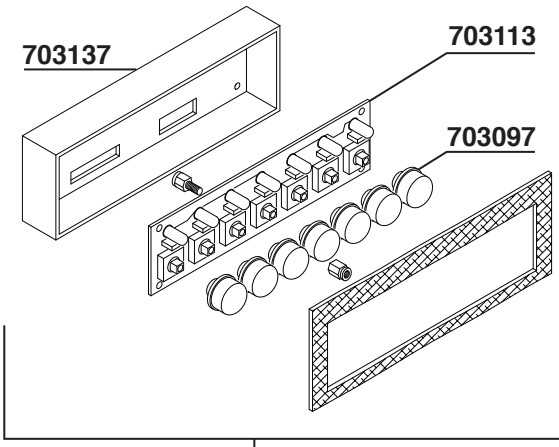

703139

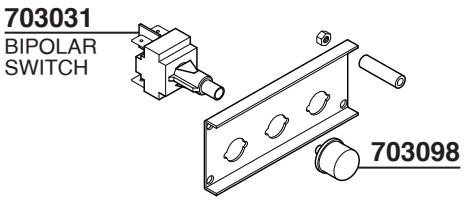

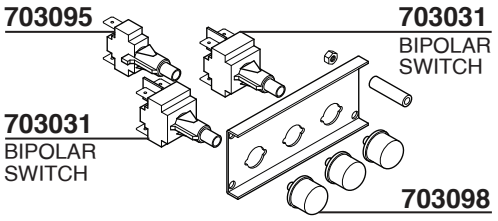

703031
BIPOLAR SWITCH

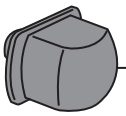

703059
CROMATO
CHROME PLATED

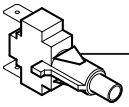

703095

703096

AURORA-BRUGNETTI Tav. 01

703500
703501
703502
703503
703504
700568
703506
524769
ORING
700176 =LUCIFER
700177 =PARKER
551934
703509
700181/22=V220
700181/11=V110
700179/22=V220
700179/11=V110
PARKER LUCIFER
703510
615977
615978
E131F4304
700301/22=V220 | 700152/22=V220
700301/11=V110 | 700152/11=V110
LUCIFER | PARKER

703507
518609 1 mm VITON
700200 0,8 mm
700200/5 0,5 mm
300009
300009/N STRONG
526182 ORIGINAL
547101
700879

703118 ORIGINAL 63,2x52x6,5 mm
703119 ORIGINAL 63,2x52x7 mm
703090 ORIGINAL 72x56x8 mm
703090/5 ORIGINAL 72x56x8,5 mm
700729 72x56x8 mm
700729/5 72x56x8,5 mm
700729/9 72x56x9 mm
700729-F 72x56x8 mm

514417 5gr
514418 6gr
521834 6gr
521830 7gr
521835 7gr
521832 8gr
521833 7gr MICROFORI MICROHOLES

516575 12gr
521998 12gr
521994 14gr
521997 14gr
514419 14gr ridgeless
526208 18gr
526757 21gr
526758 24gr
521996 14gr MICROFORI MICROHOLES

BLIND FILTER
FILTRO CIECO
521901
521902

AURORA-BRUGNETTI Tav.02

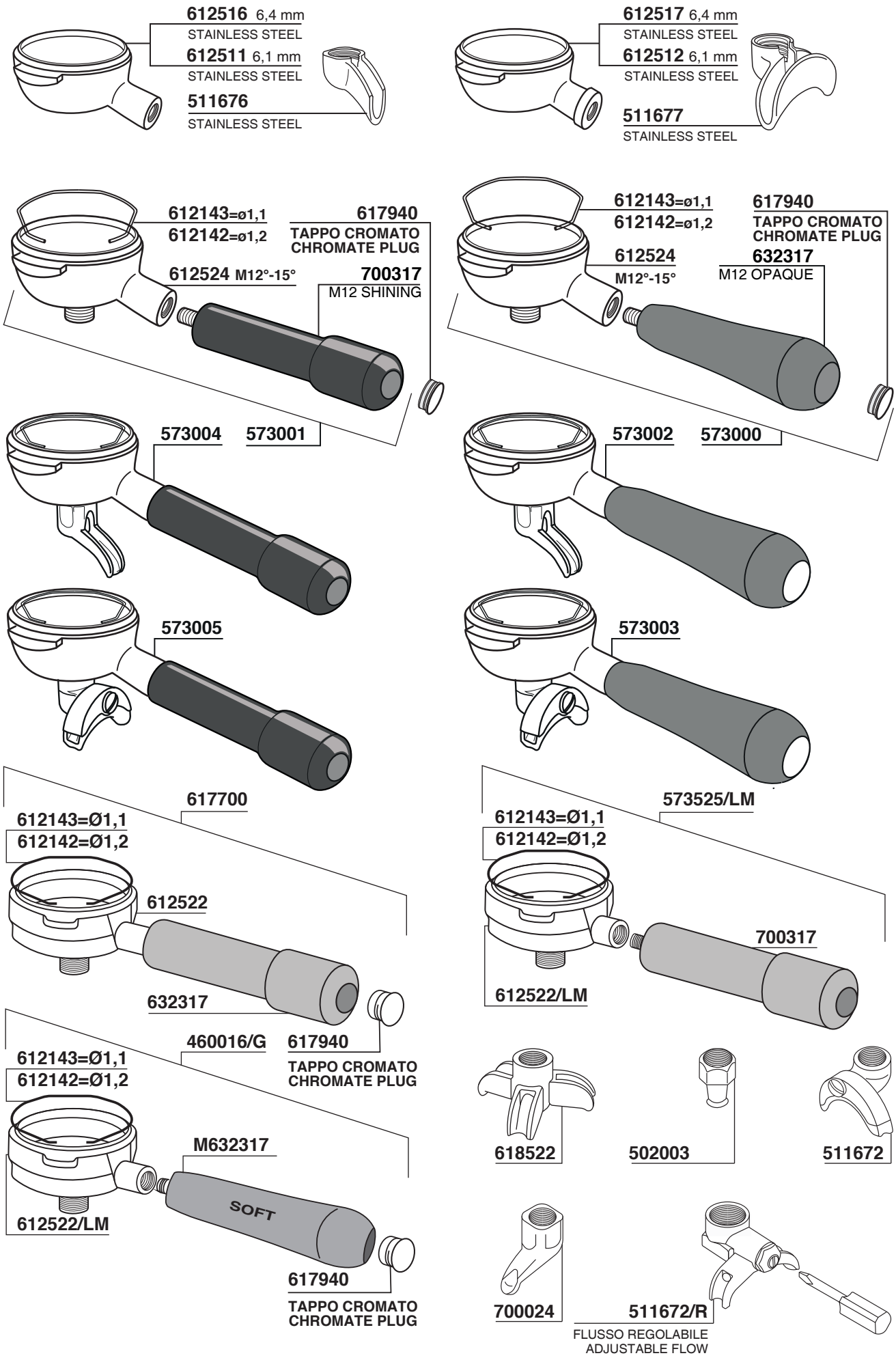

AURORA-BRUGNETTI Tav. 03

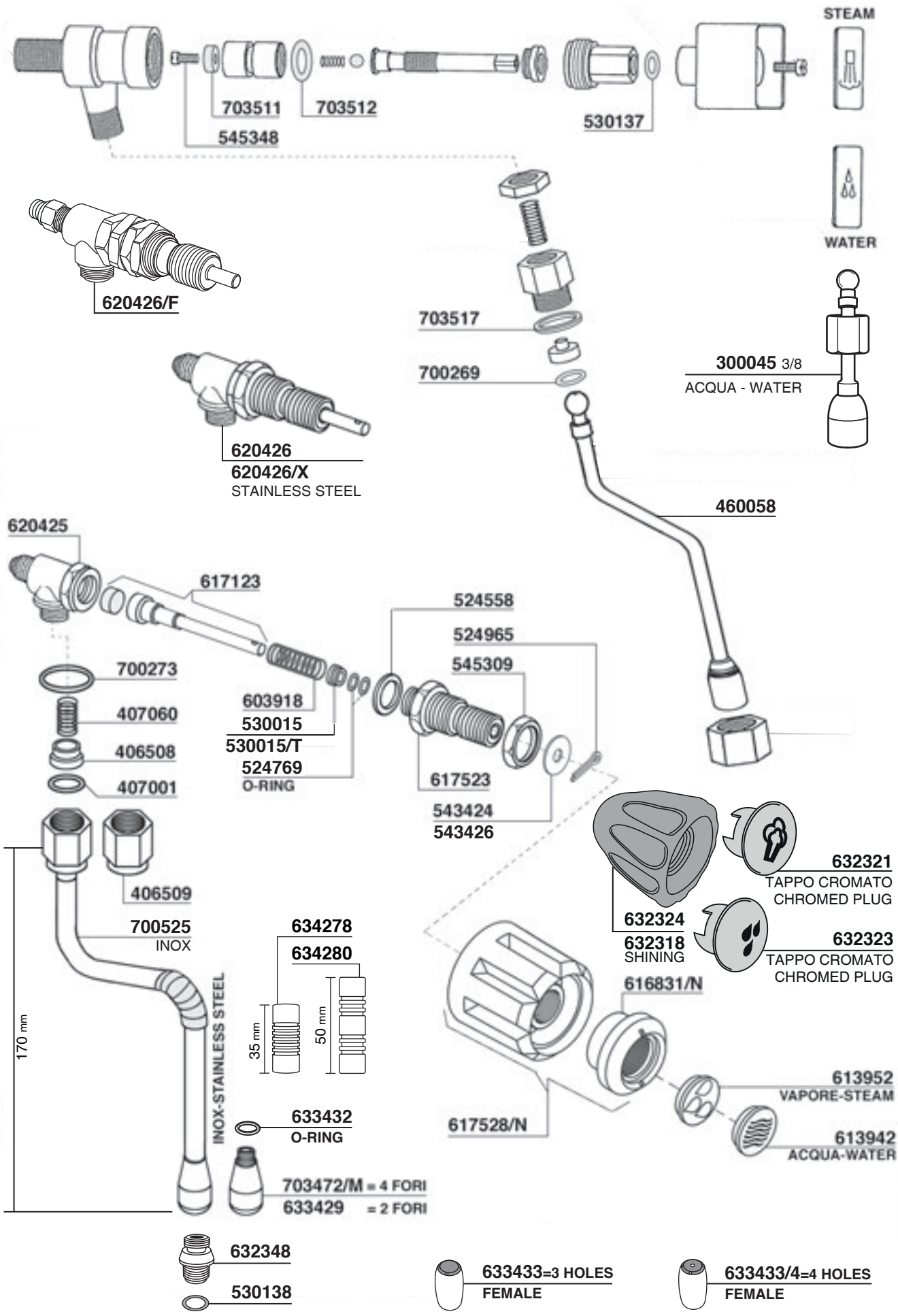

AURORA-BRUGNETTI Tav. 04

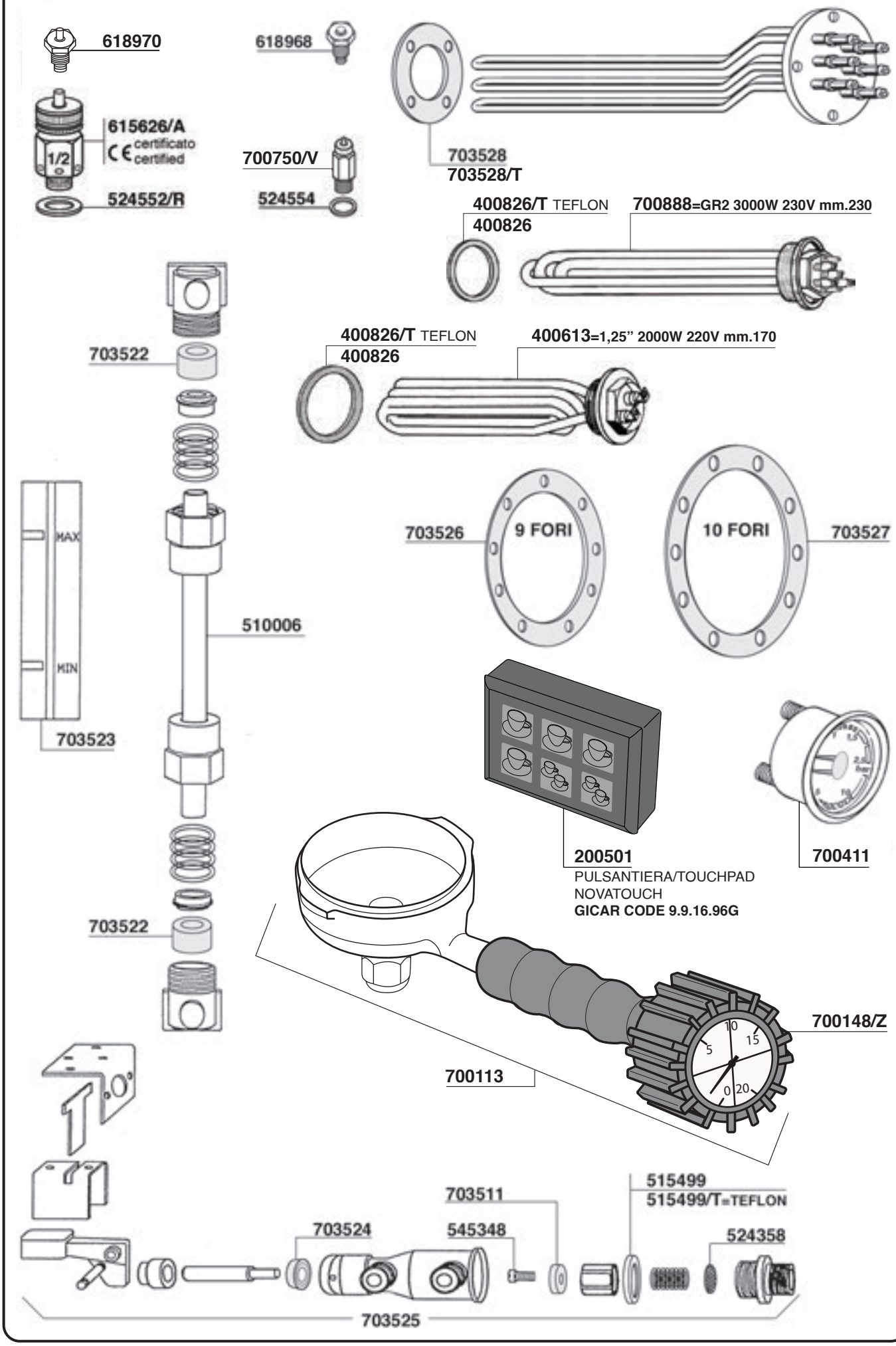

BEZZERA

Tav. 01

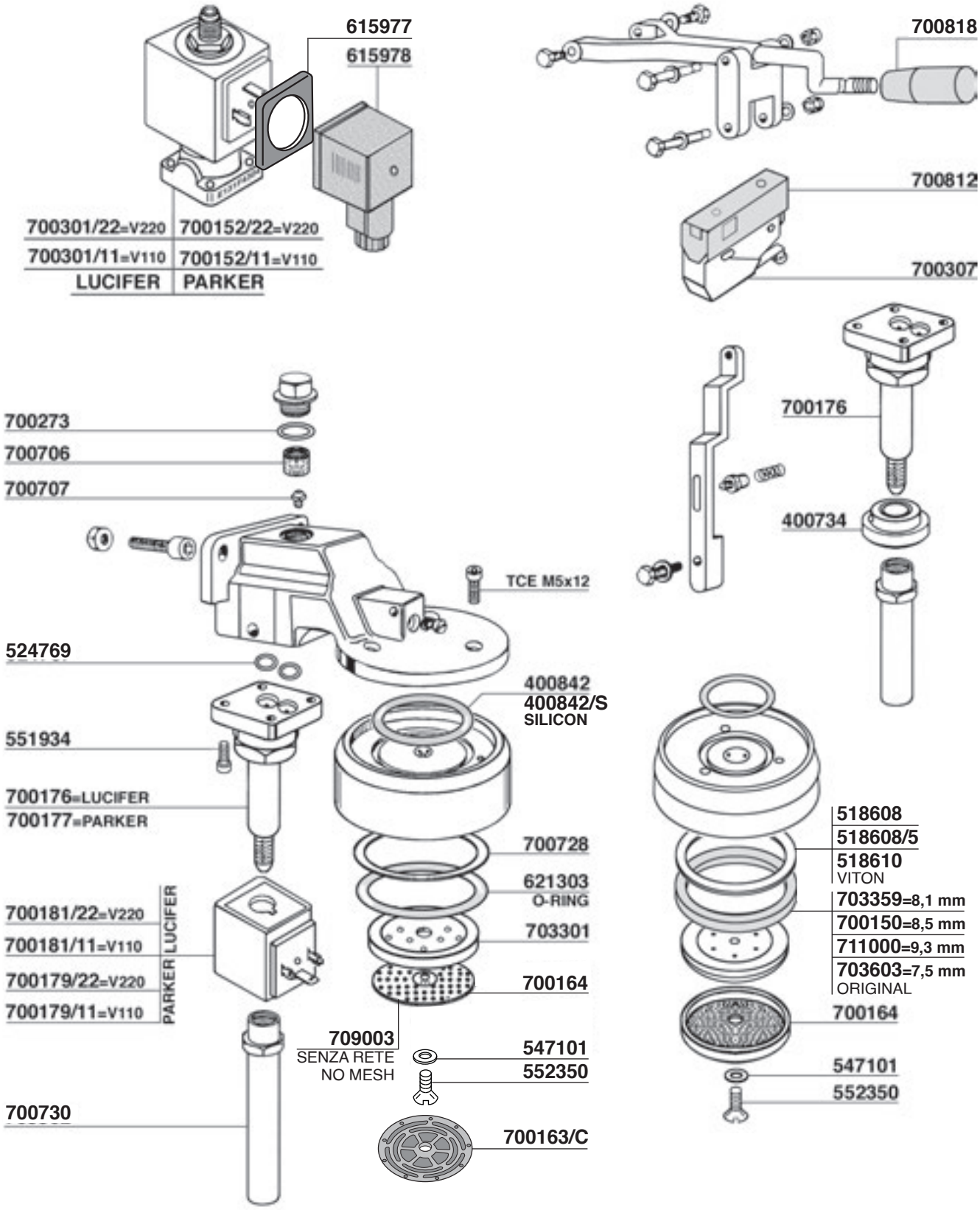

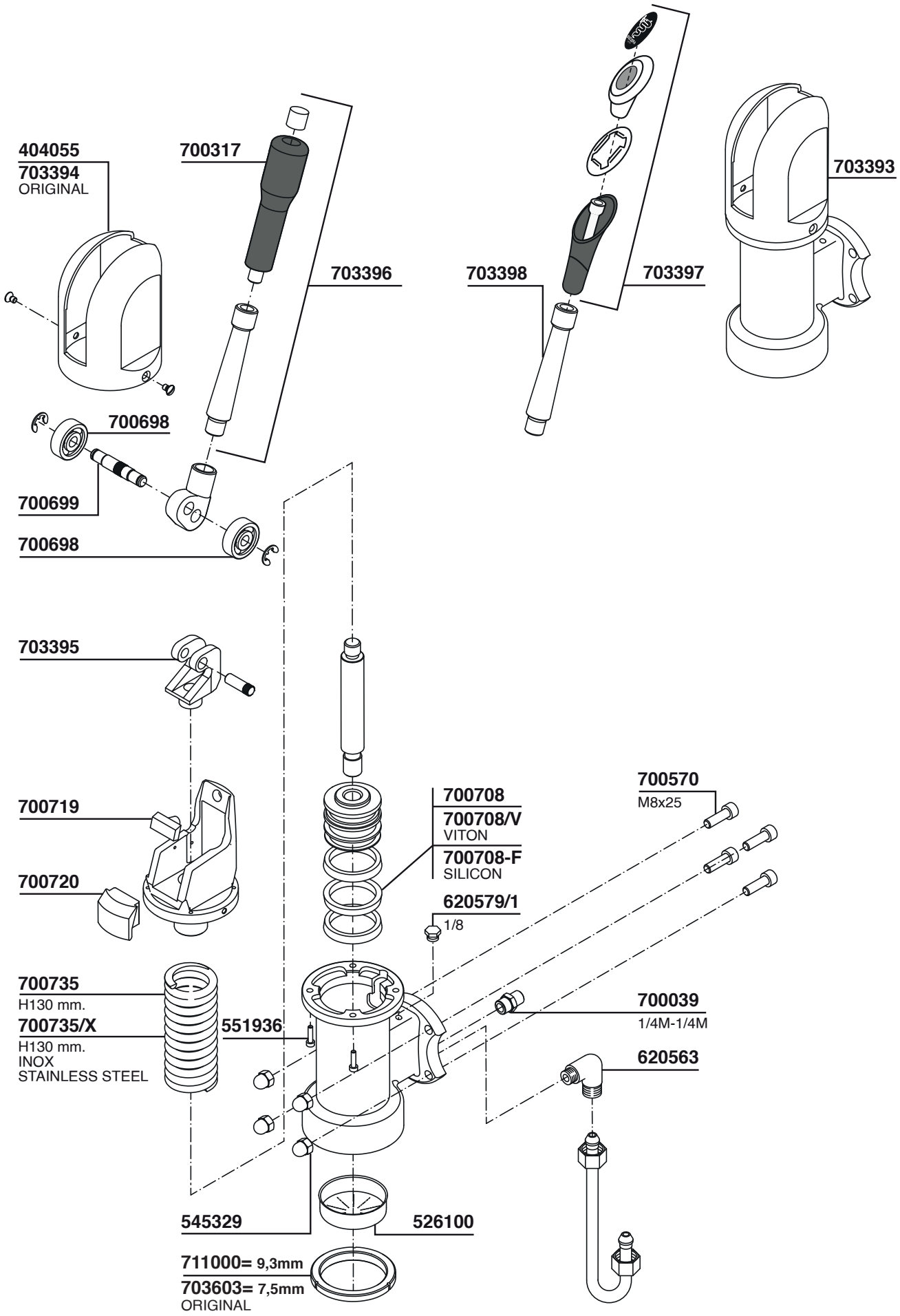
404055
703394
ORIGINAL
700317
703396
703398
703397
703393
700698
700699
700698
703395
700719
700720
700708
700708/V
VITON
700708-F
SILICON
620579/1
1/8
700570
M8x25
700735
H130 mm.
700735/X
H130 mm.
INOX
STAINLESS STEEL
551936
700039
1/4M-1/4M
620563
545329
526100
711000= 9,3mm
703603= 7,5mm
ORIGINAL

BEZZERA

Tav. 03

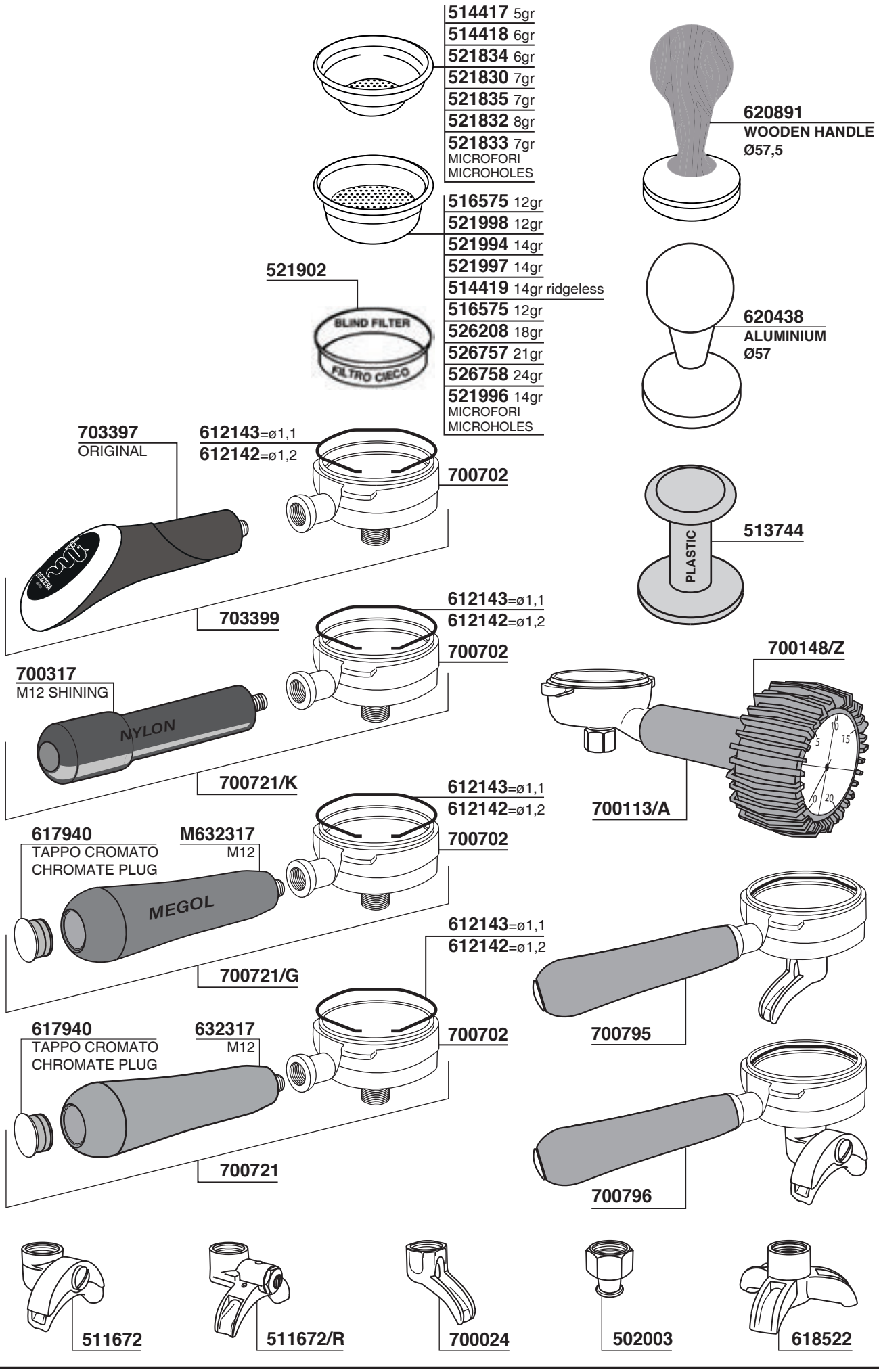

B2000 - B3000 - C2009 - C2013

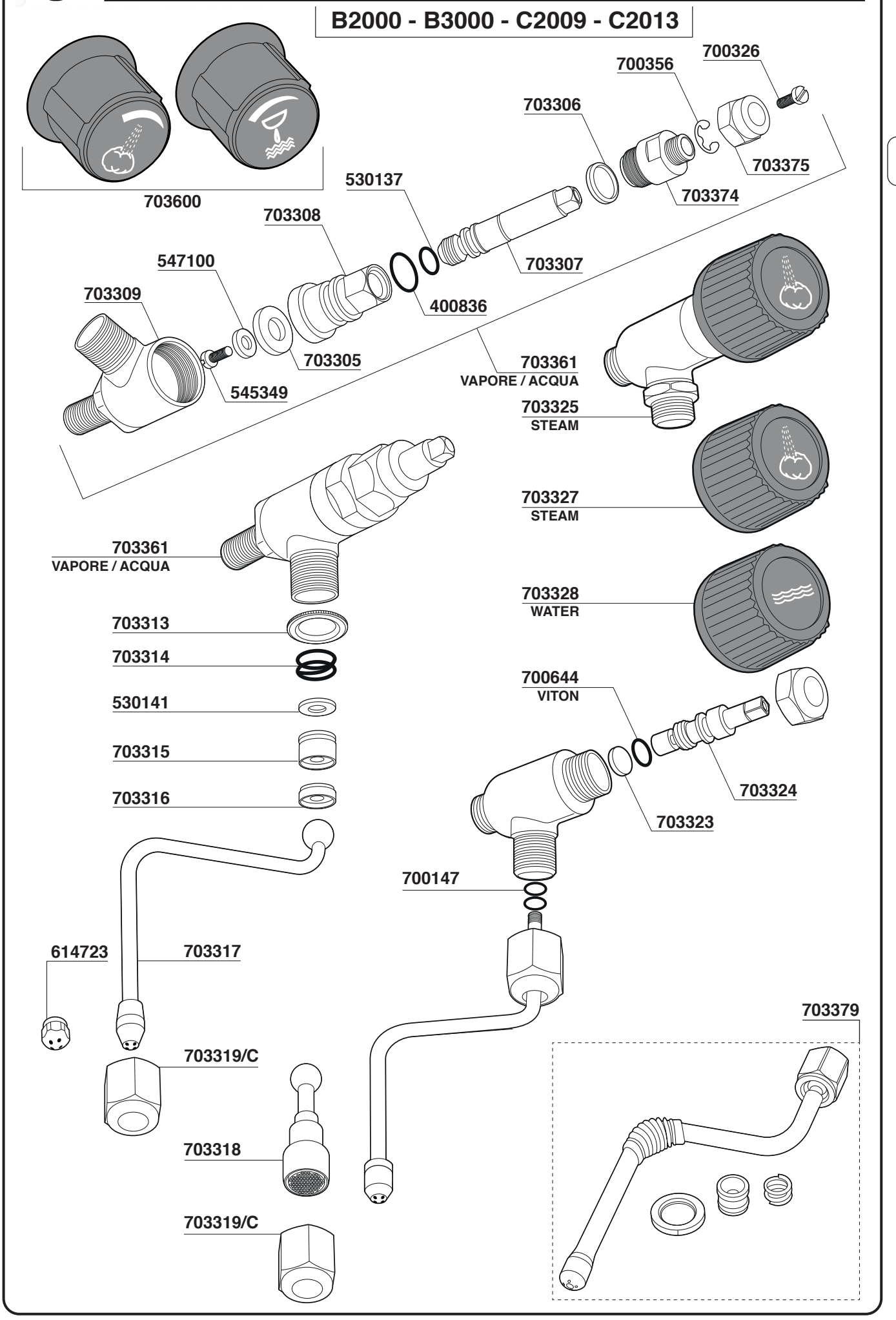

BEZZERA

Tav. 05

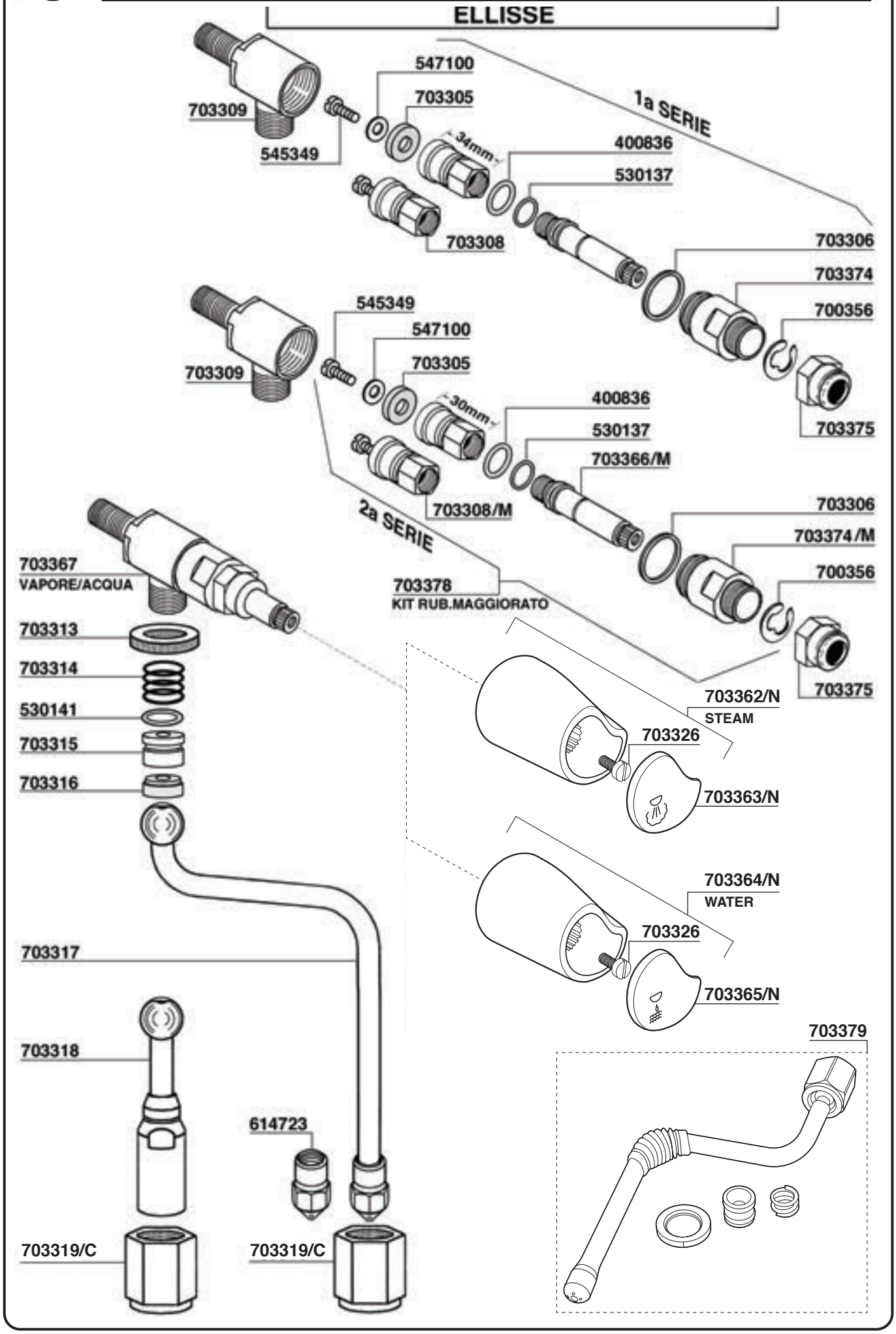

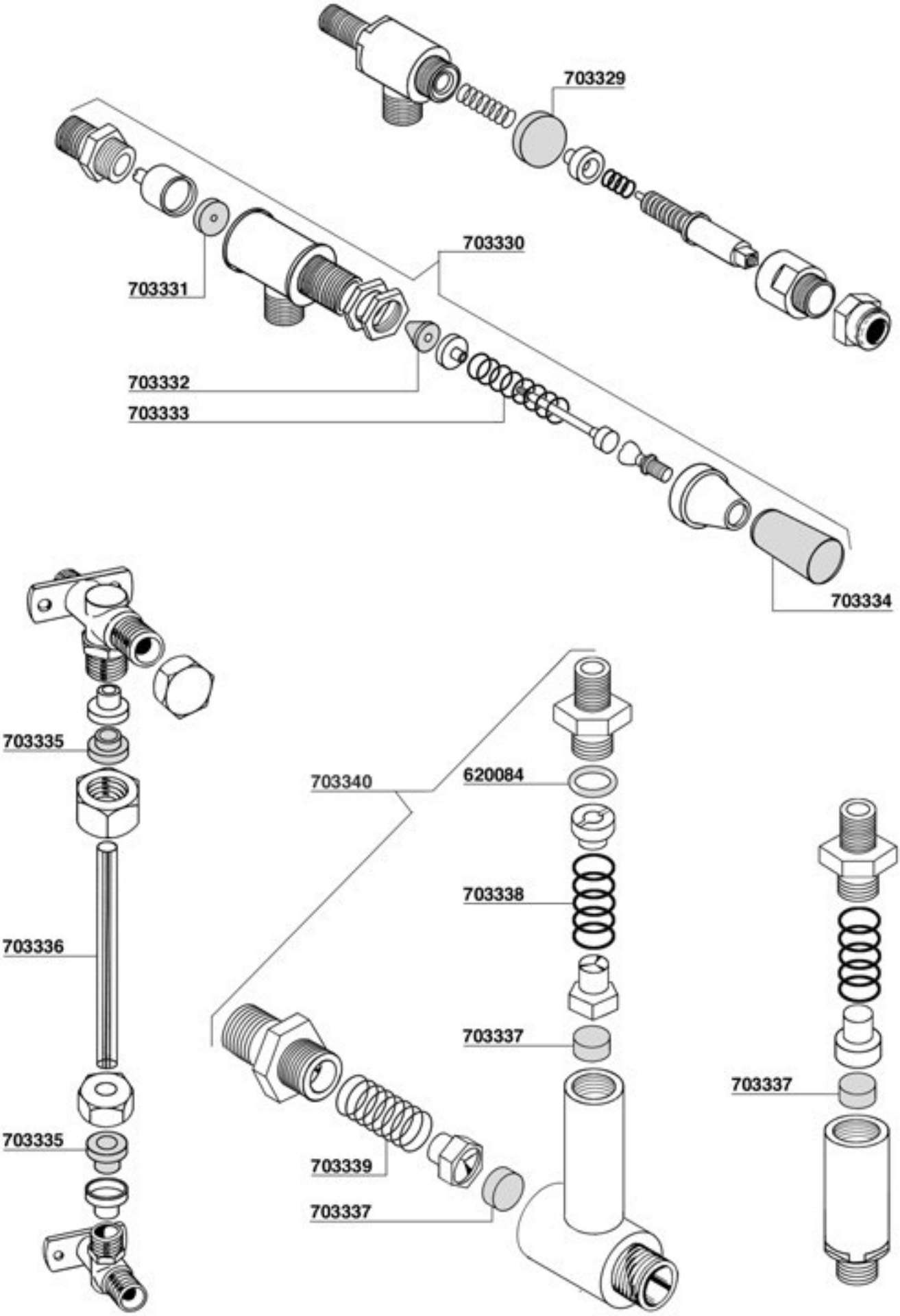
703329
703330
703331
703332
703333
703334
703335
703336
703335
703340
620084
703338
703337
703339
703337
703337

BEZZERA

Tav. 07

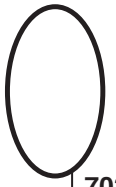

703384

703383=W2600/3050 V220/240 mm.230

703342

703345=GR1 W2000 V220 mm.150
703345/11=GR1 W1400 V110 INCOLOY mm.150
703346=GR2 W3500 V220 mm.340
703346/11=GR2 W2600 V110 mm.340
703376=GR3 W5000 V220 mm.540

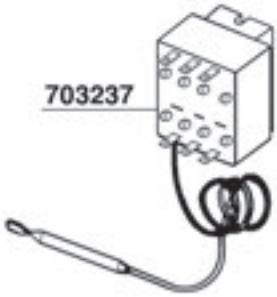

703237

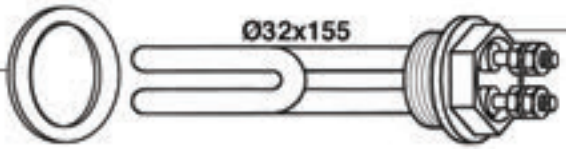

401378/T

Ø32x155

703348 =V220 W1350
703348/11 =V110 W1350

400826/T TEFLON
400826

560083 = W1800 V220 mm.105

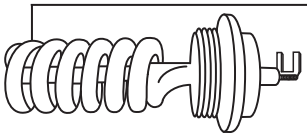

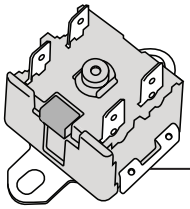

300001
125°

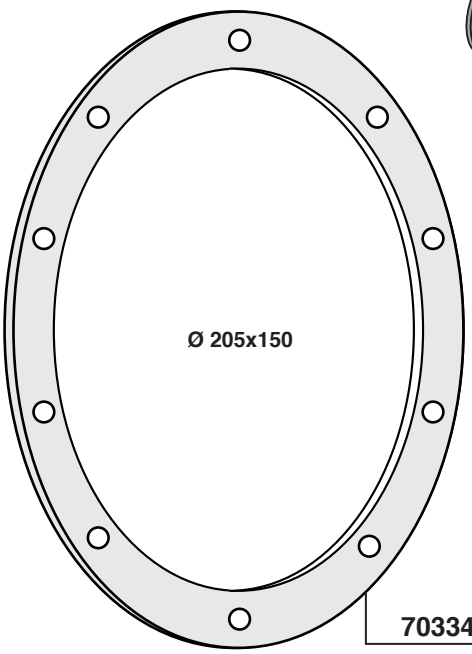

Ø 205x150

703343

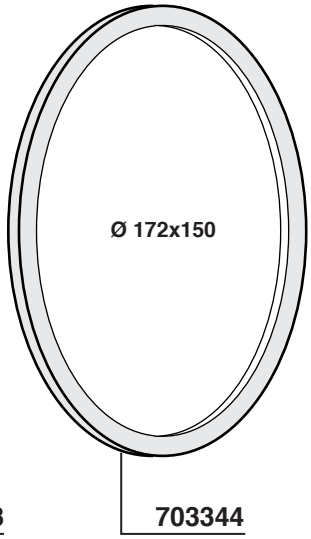

Ø 172x150

703344

703356

700031/16 =Ø16x23

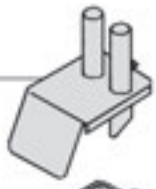

703369
ELLISSE

703368
ELLISSE

618970

618968

615626/A
CE certificato certified

524552/R

700750/V

524554

620405/C

617902

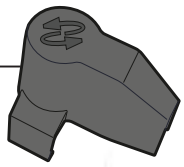

700648/22 V230/50/60
700648/24 V240/50/60

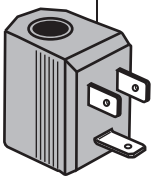

615978/T

615979

617903/G

530148

551937

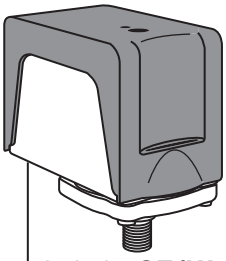

616597 CE/UL

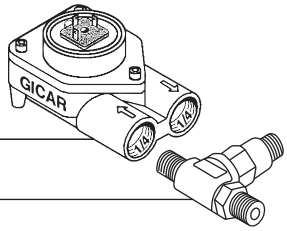

620405

703352

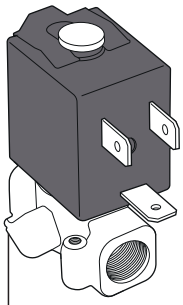

616602/22 =V220
616602/11 =V110

615978/P

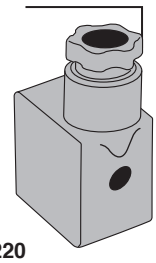

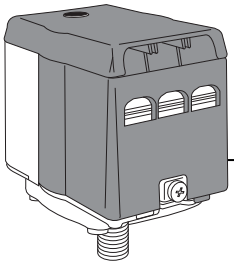

616592 CE
SIRAI

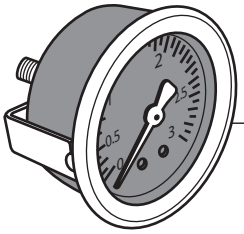

703353
BOILER

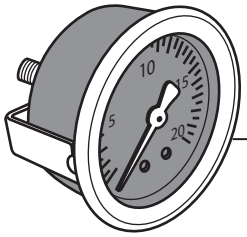

703354
POMPA

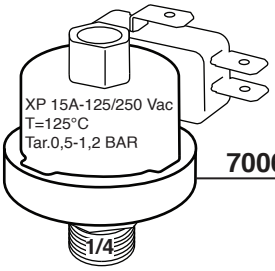

700662

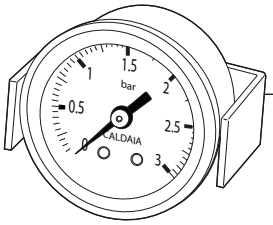

560271
BOILER

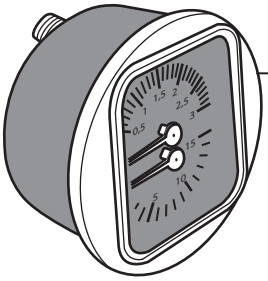

703355
POMPA

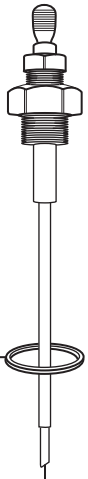

524554

612601 120mm
612601/L 140mm

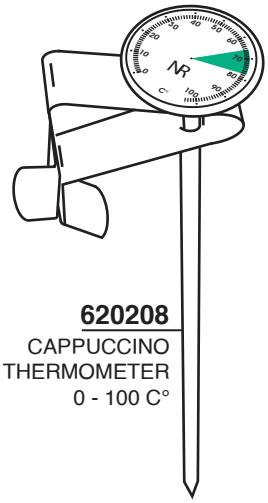

620208
CAPPUCCINO
THERMOMETER
0 - 100 C°

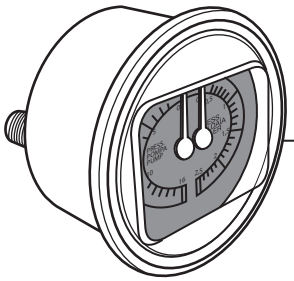

703357
ELISSE

703371
Mod. DE

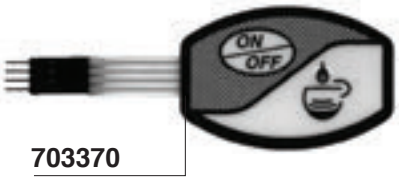

703370

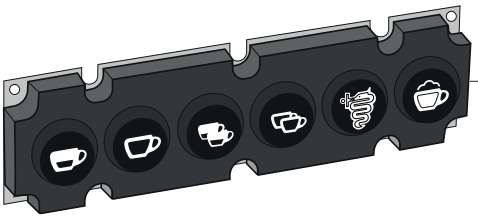

703601
ORIGINAL

703372

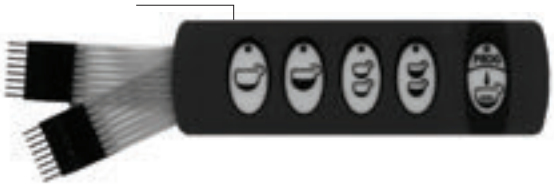

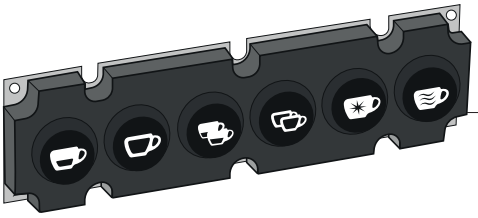

703602
GICAR CODE 9.9.14.07G

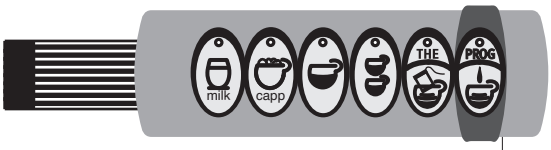

703381

703380

703373
Mod. TE

620737
GICAR CODE 9.9.12.00 G

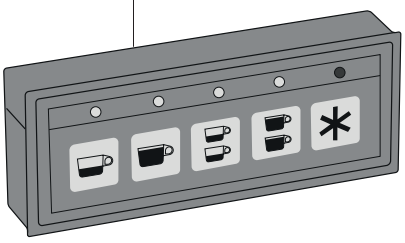

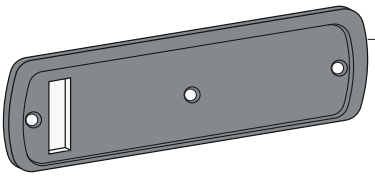

703390 GREY
703391 BLUE
703392 BLACK

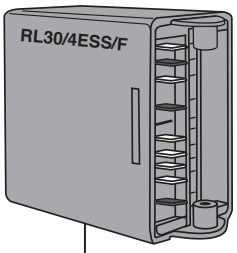

703389 230V
GICAR CODE 9.1.24.20 G

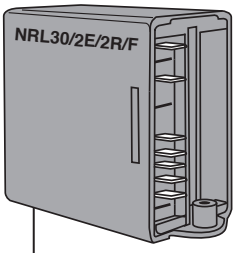

703382 230V
GICAR CODE 9.1.41.22 G 02

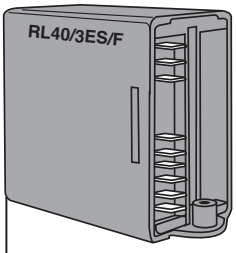

703312 220V
GICAR CODE 9.1.15.52 G
703312/11 110V
GICAR CODE 9.1.15.53 G

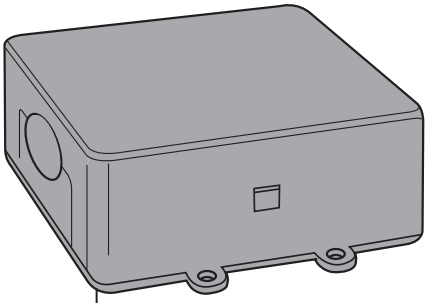

703377 ELLISSE GR1-2-3 220V
GICAR CODE 9.5.22.02 G 00

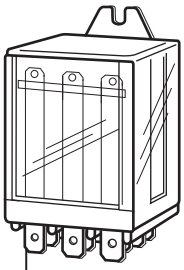

700652/22 220V

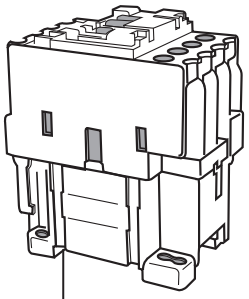

700930 220V
700931 110V

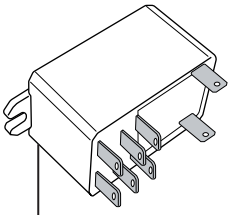

703385 240V

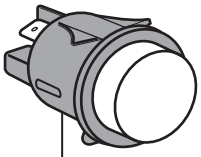

618010 RED
618010/V GREEN

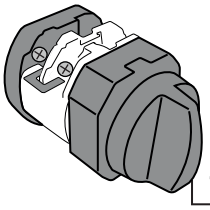

703350

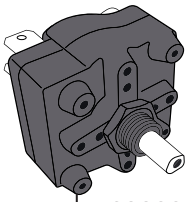

703388

617729/22 220V

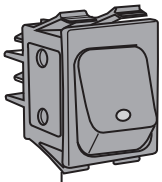

579671 BLACK

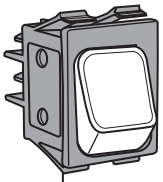

621080

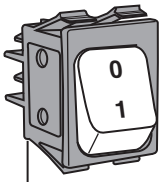

700382 ORANGE

BFC - ROYAL

Tav. 01

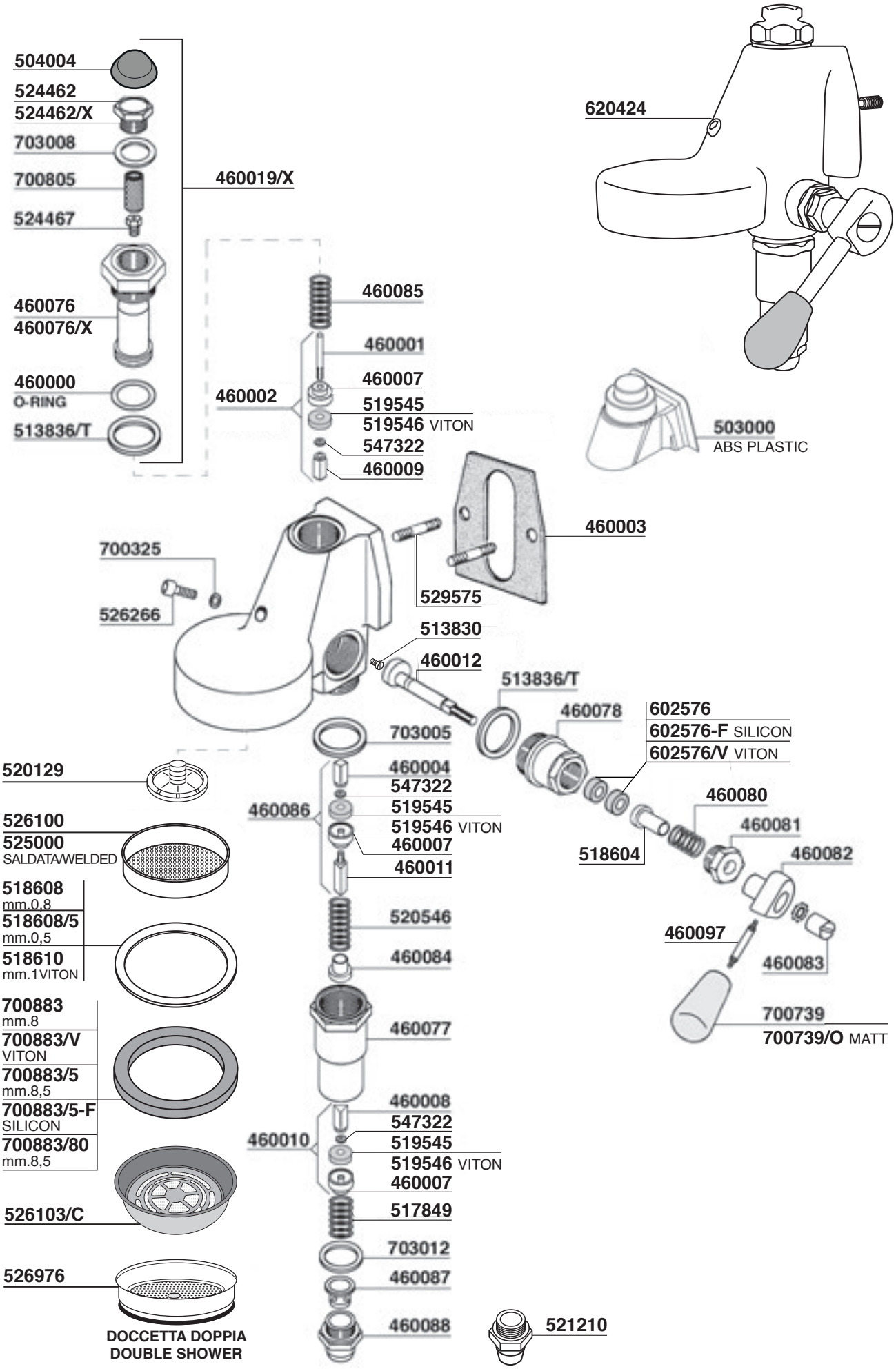

BFC - ROYAL

Tav.02

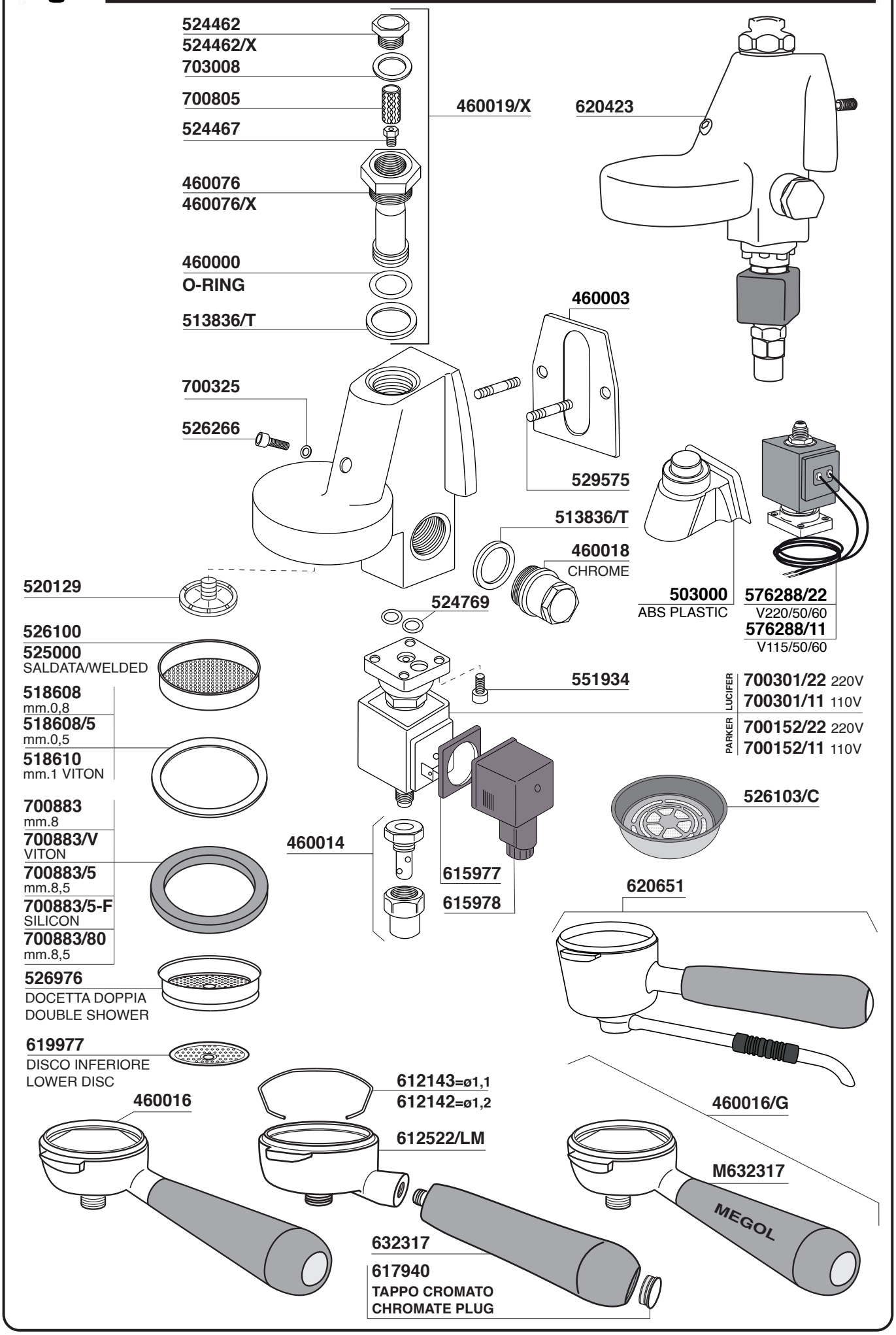

BFC - ROYAL

Tav.03

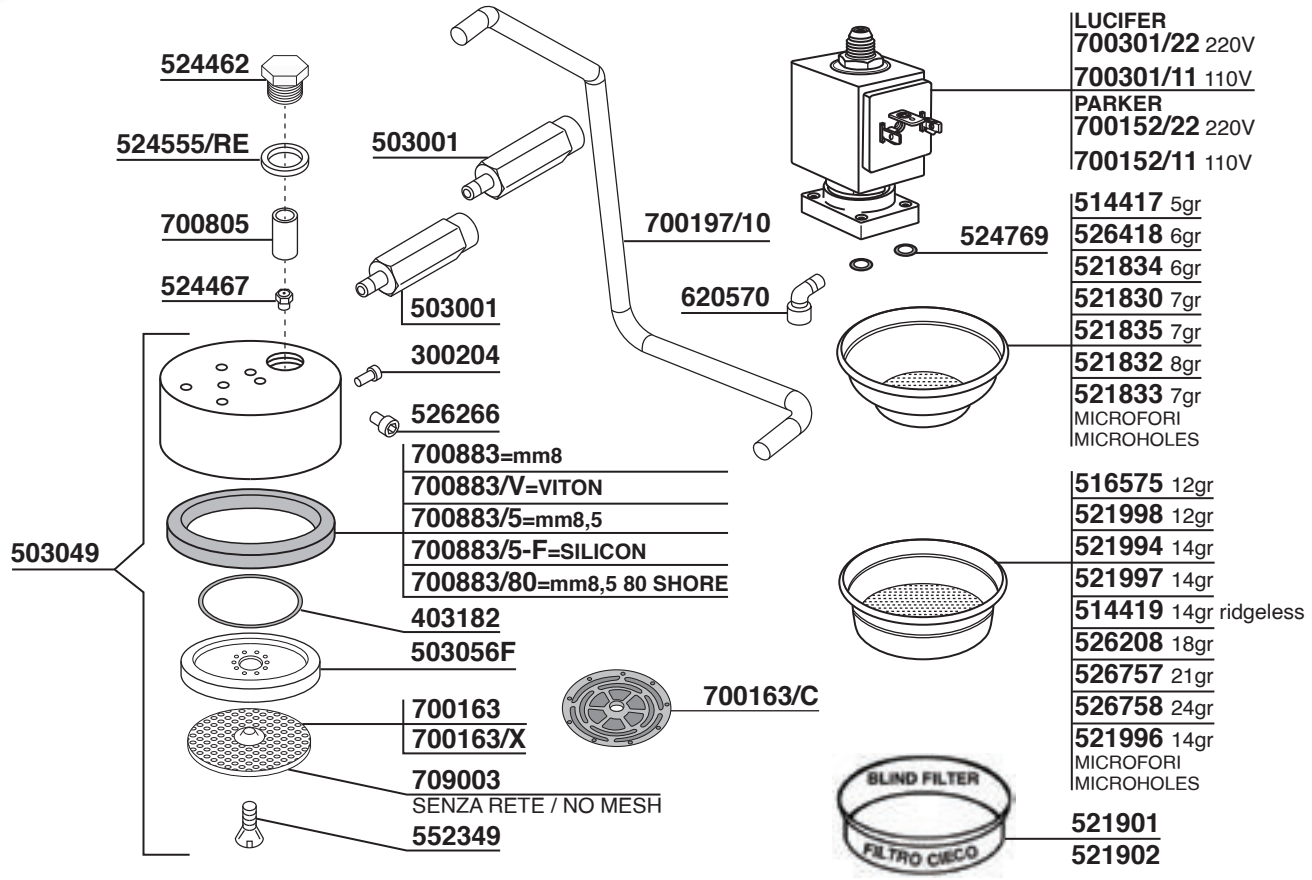

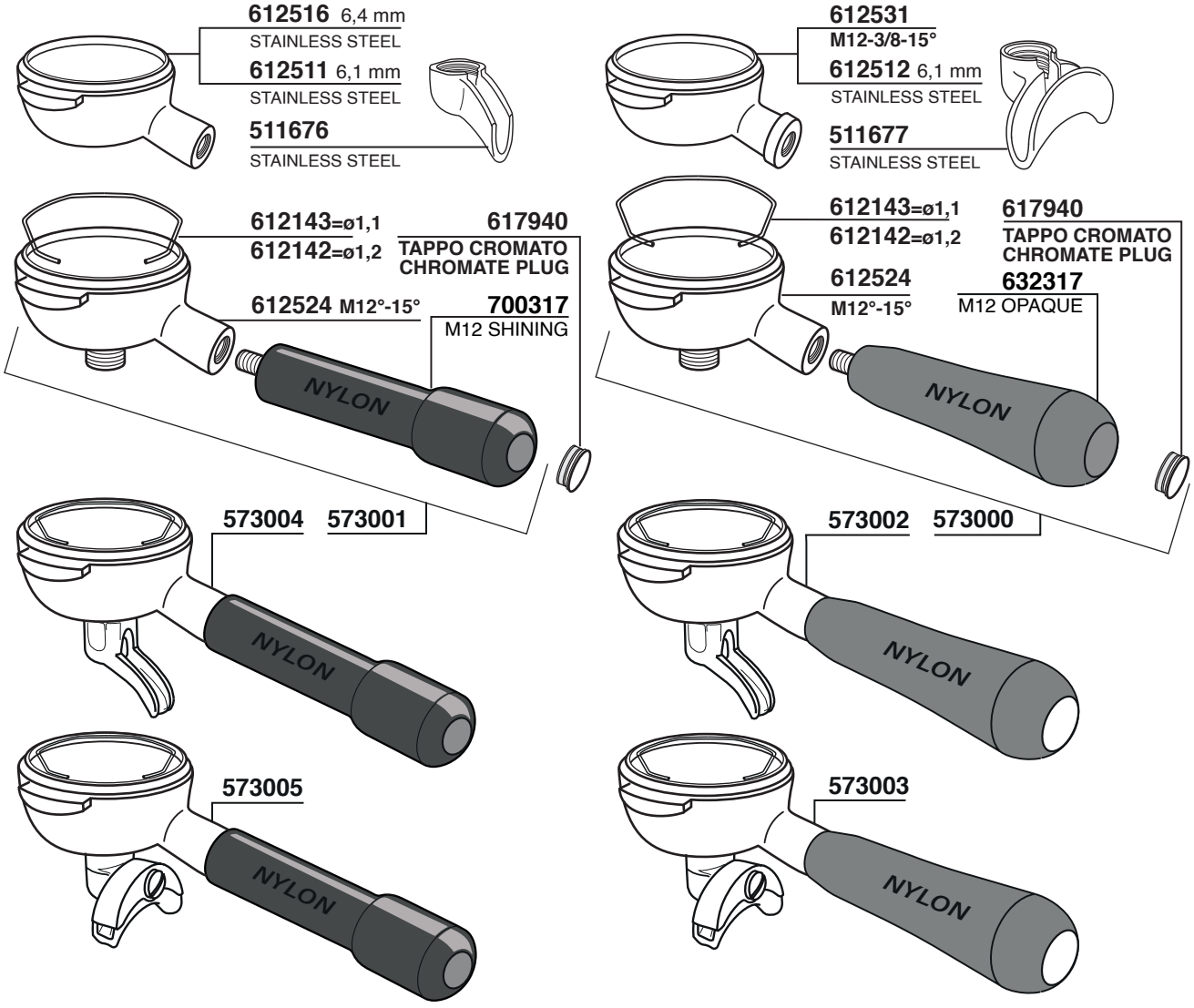

BFC - ROYAL

Tav. 04

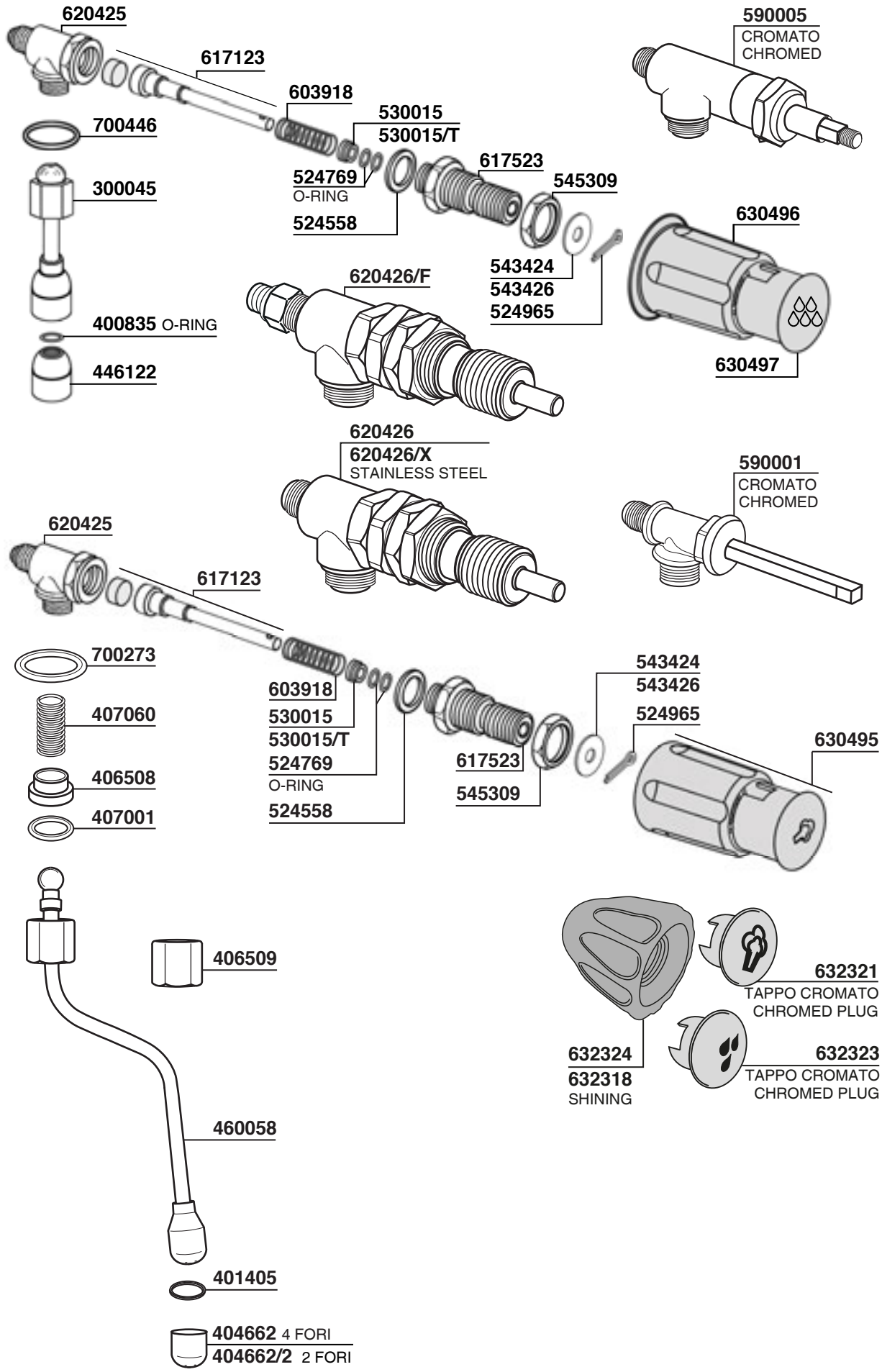

BFC - ROYAL

Tav. 05

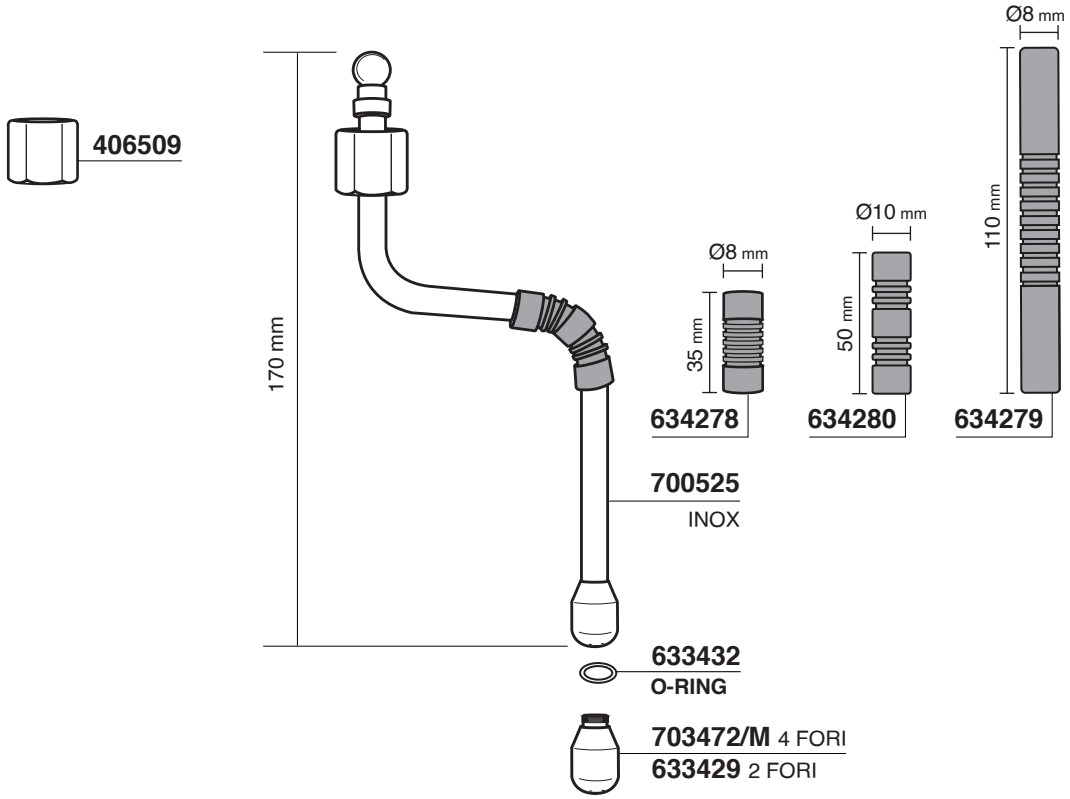

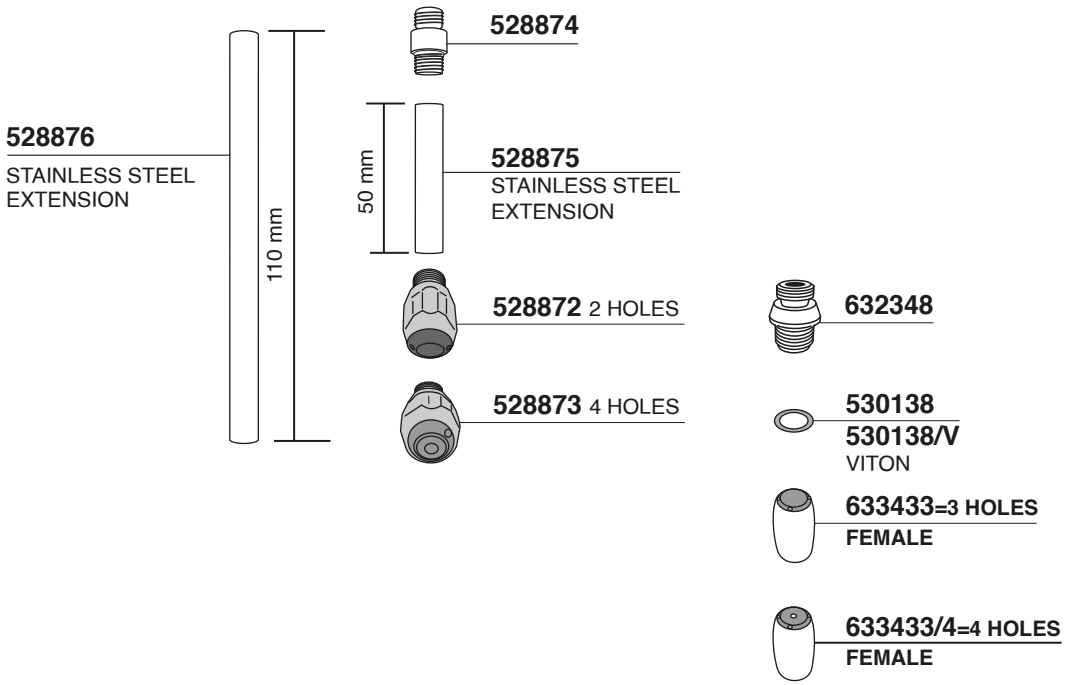

BFC - ROYAL

Tav. 06

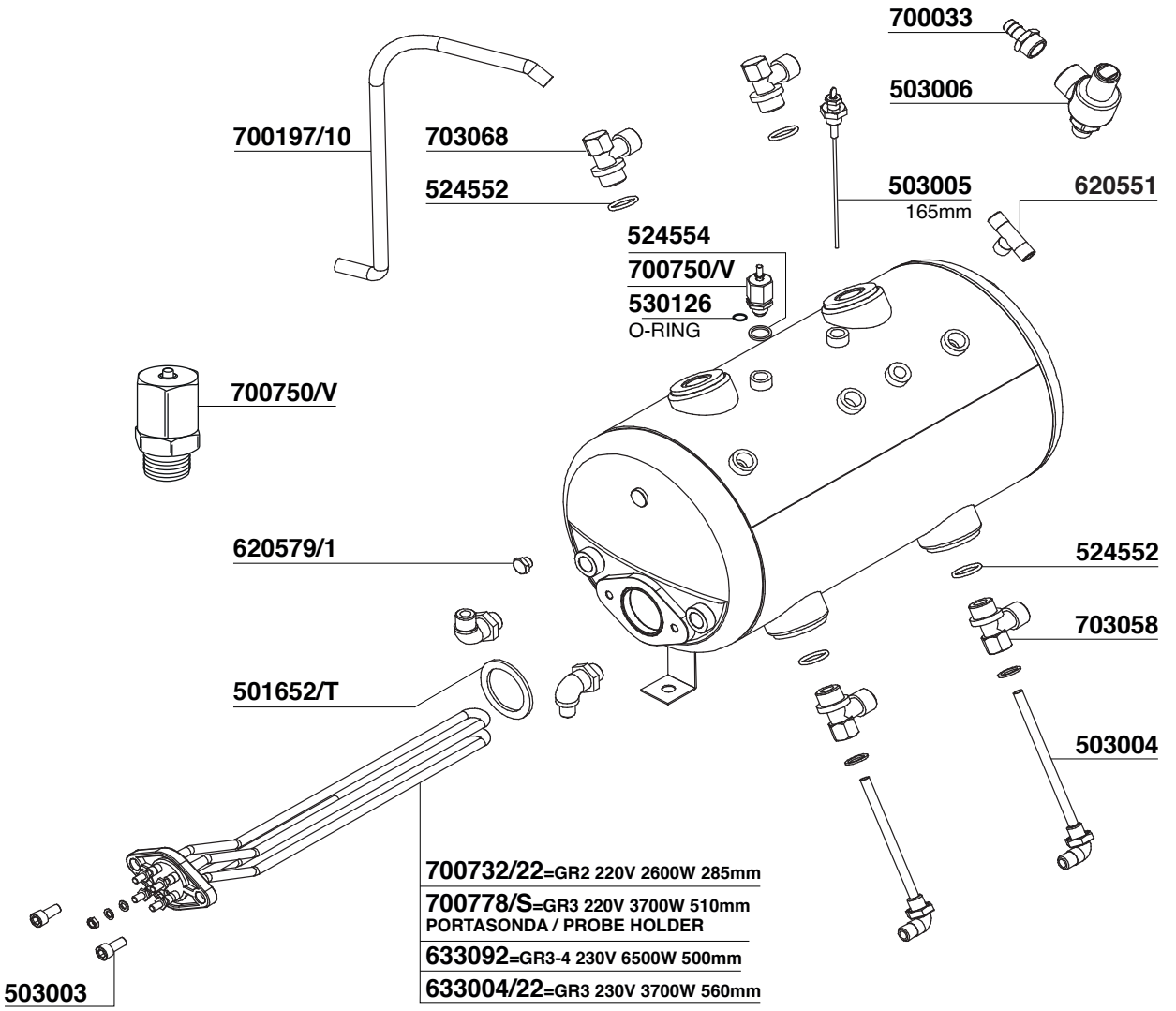

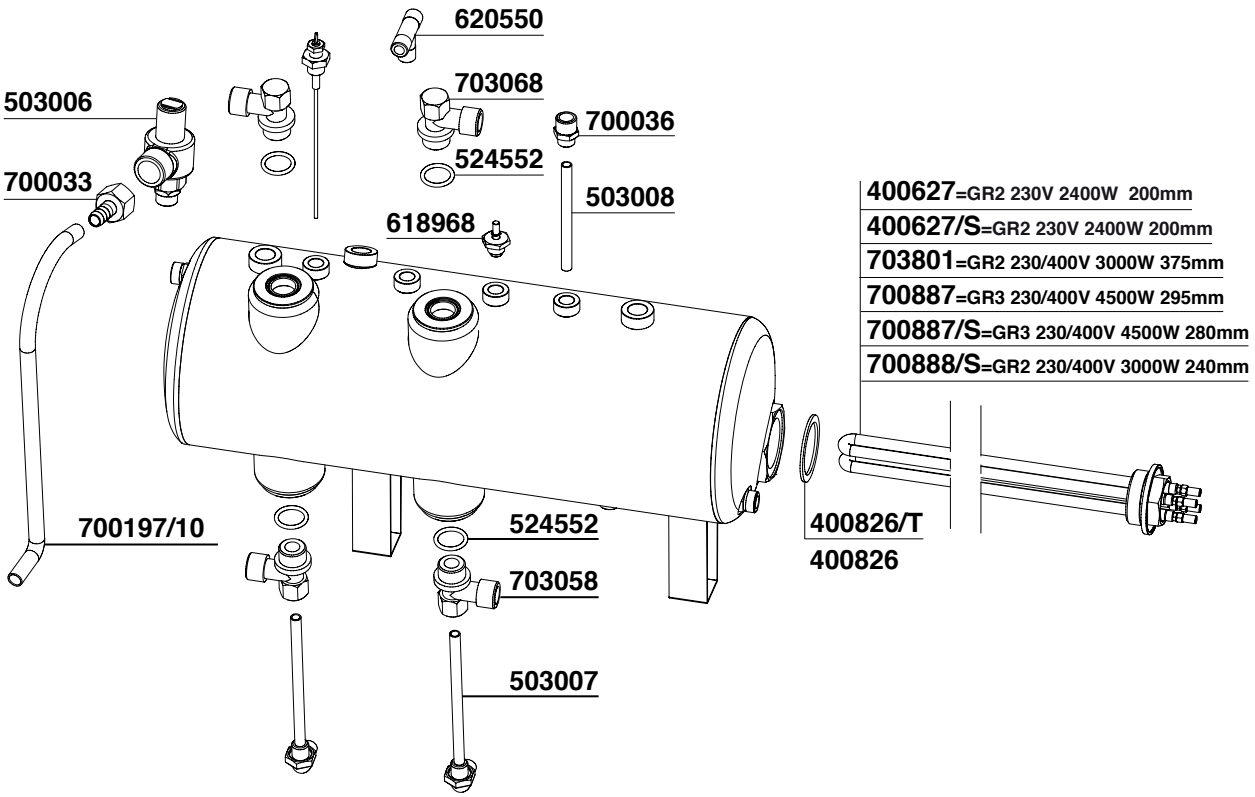

BFC - ROYAL

Tav. 07

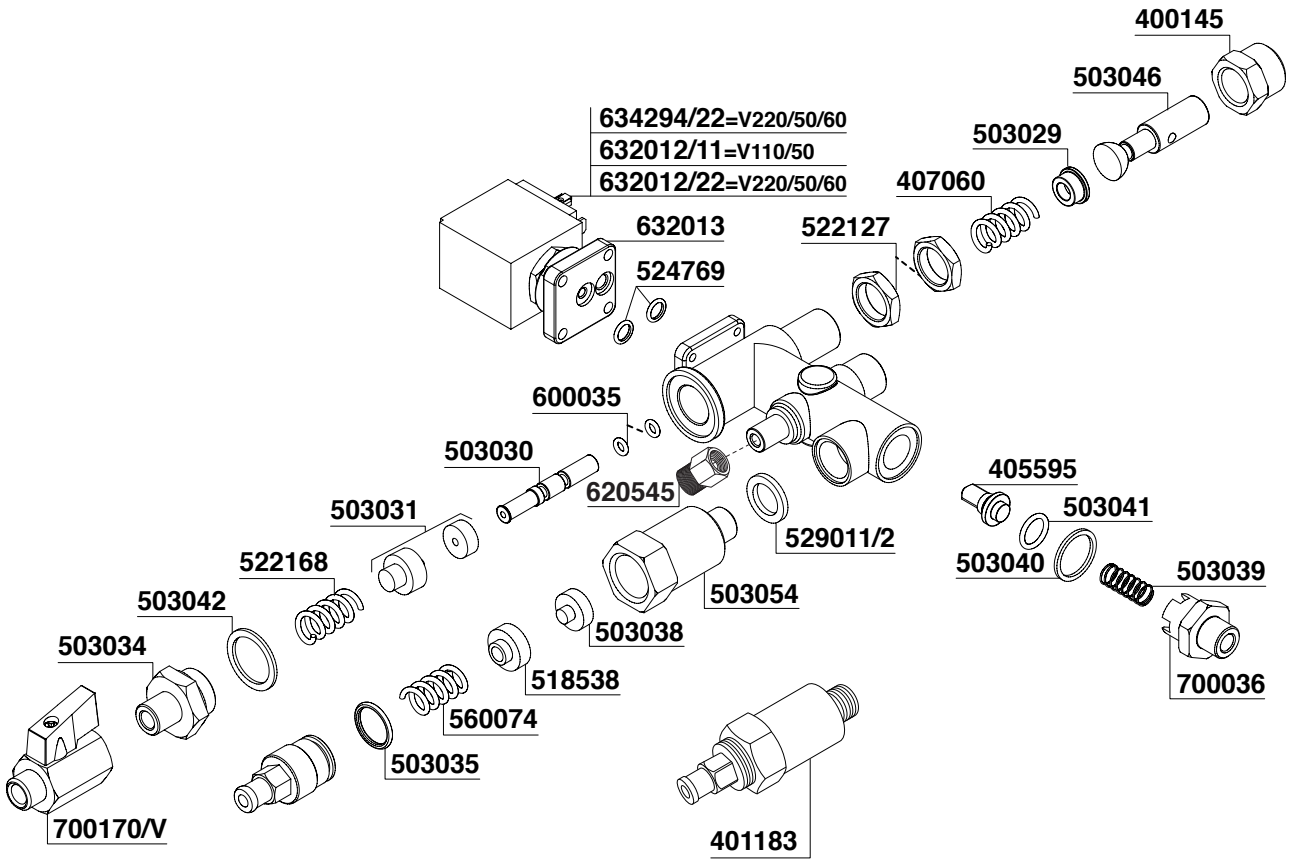

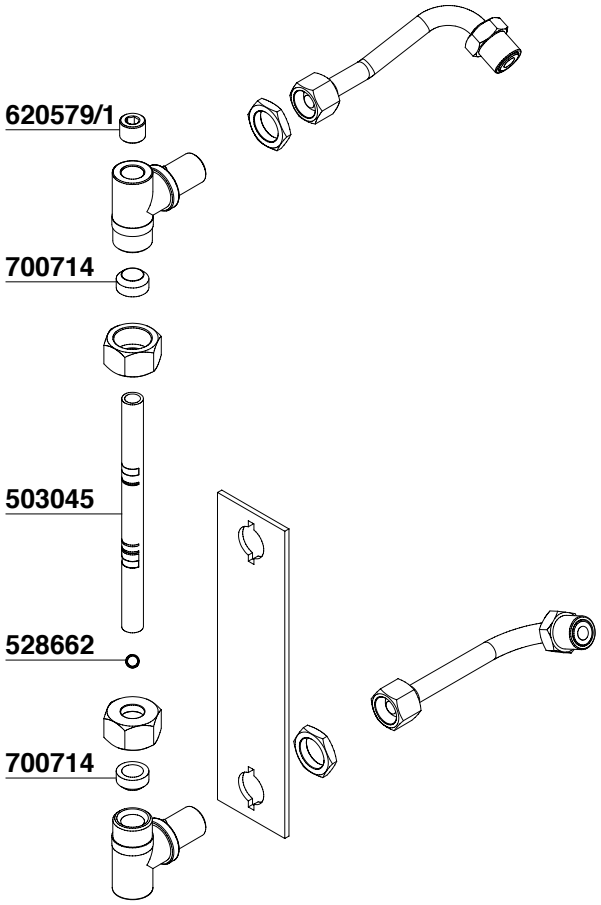

BFC - ROYAL

Tav. 08

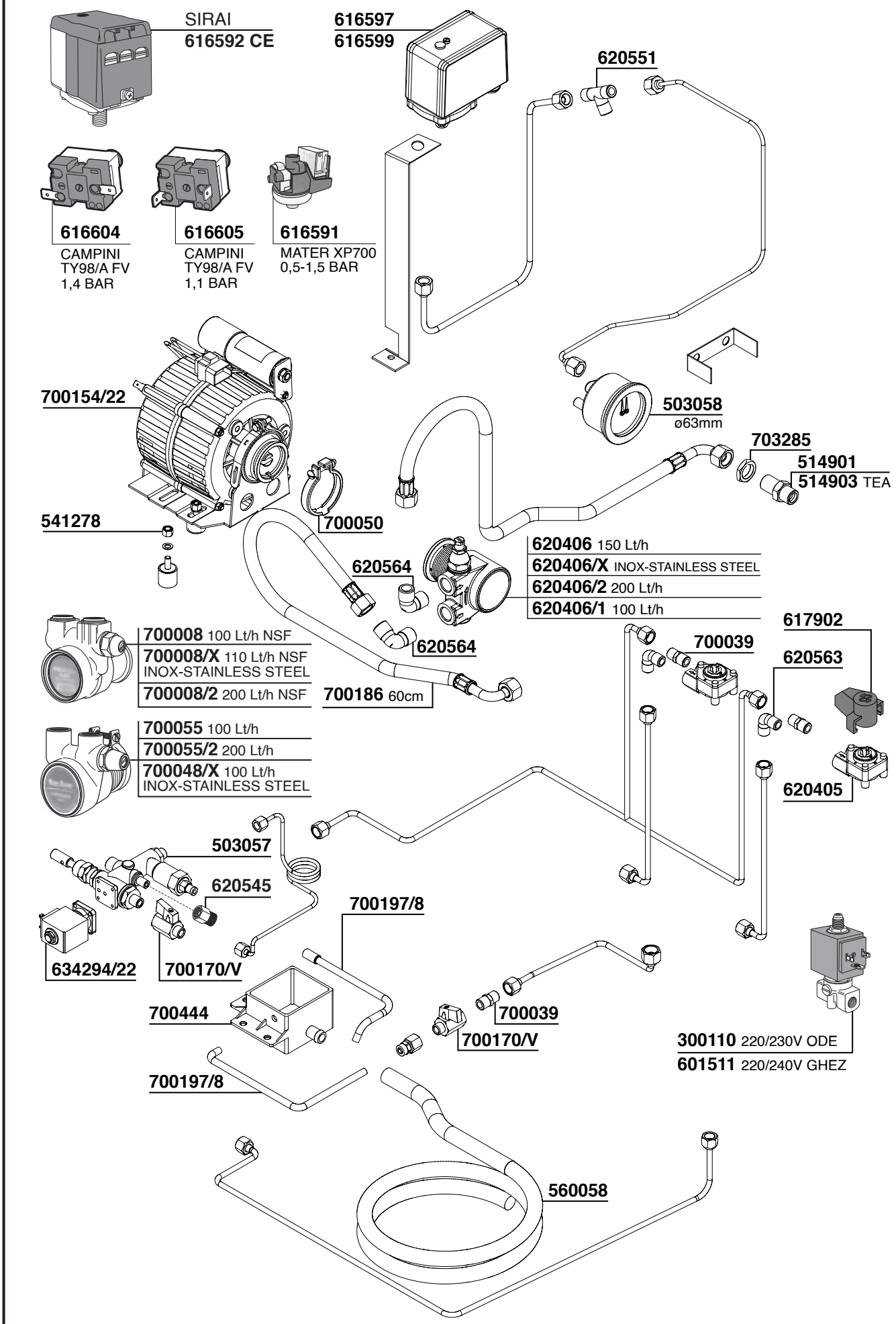

BFC - ROYAL

Tav. 09

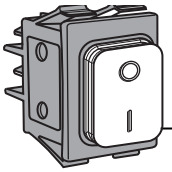

503048

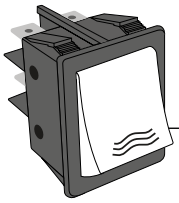

618013

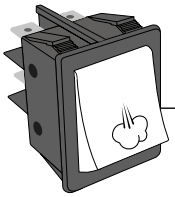

618012

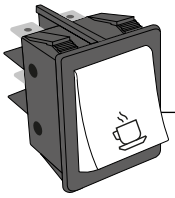

618011

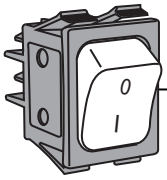

700429

413706

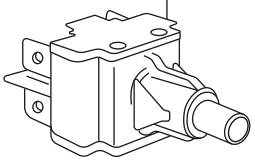

413707

413708

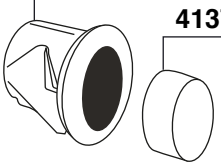

703000

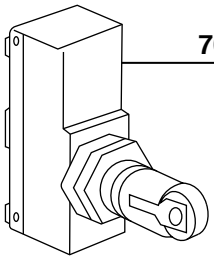

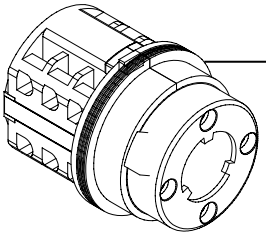

503014 20AMP
503047 32AMP

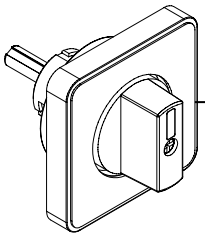

503015
CLASSICA
DELUX
DIADEMA
DOGARESSA
GRANDOGE
IMOLA
MARANELLO
MONZA
VALLELUNGA

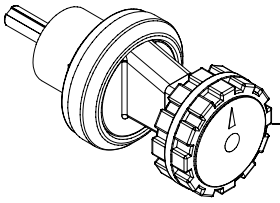

503016
LIRA

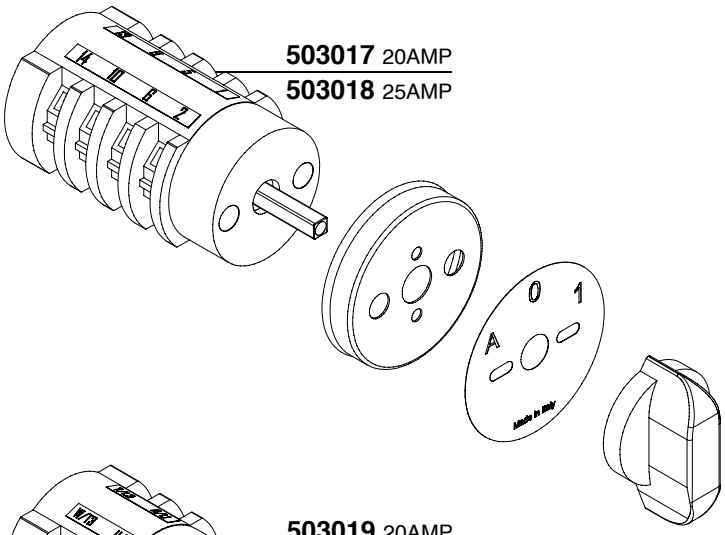

503017 20AMP
503018 25AMP

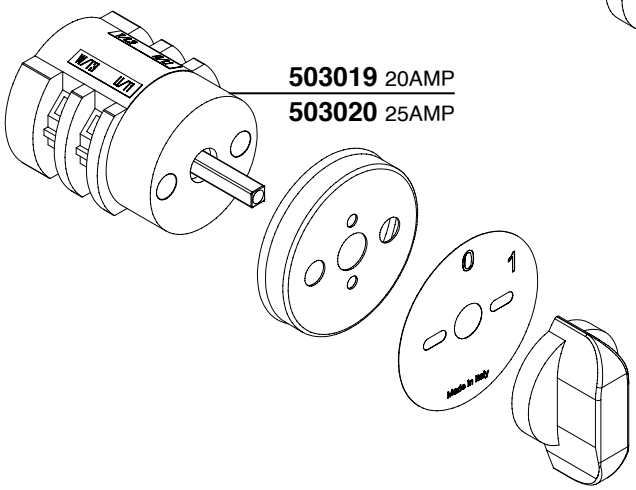

503019 20AMP
503020 25AMP

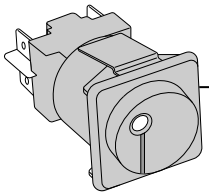

630381
IMPERO, MONZA-IMOLA-
MARANELLO, MONZA-K
ANTEA, GRANDOGE
DOGARESSA, CLASSICA

503051
SYNCHRO, DE LUX
VALLELUNGA, LIRA, LIRA-S
OPERA, CLASSICA EVA

BFC - ROYAL

Tav. 10

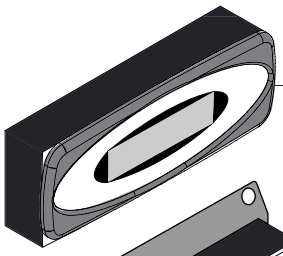

503021
GICAR CODE 9.5.31.12G
DE LUX OLD

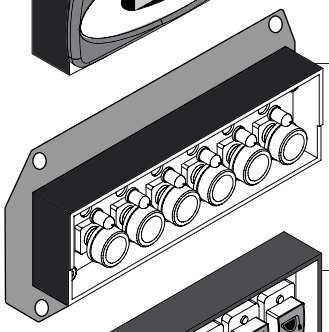

503022
MONZA
IMOLA
MARANELLO
DE LUX

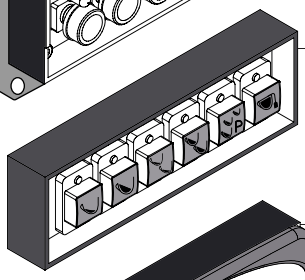

503023
GICAR CODE 9.9.07.20G
VALLELUNGA

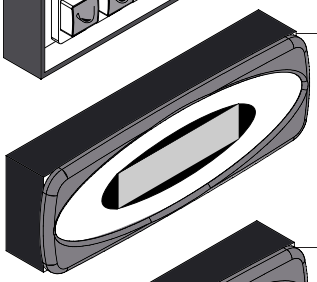

503024
GICAR CODE 9.5.13.78G
LIRA

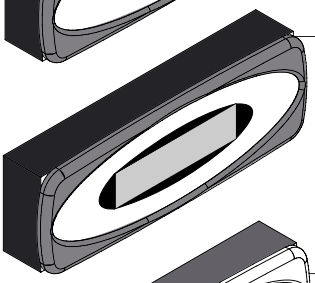

503059
GICAR CODE 9.5.31.56G
DE LUX
MONZA
MONZA K

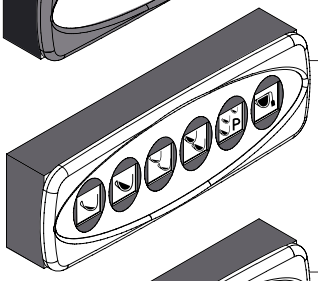

503025
GICAR CODE 9.9.07.75G
LIRA

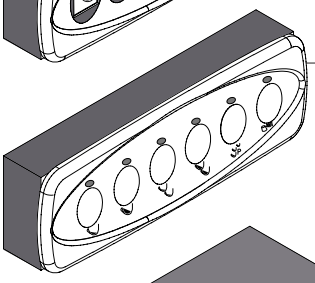

503060
GICAR CODE 9.9.14.08G
SYNCRO
VALLELUNGA

503013
DIADEMA

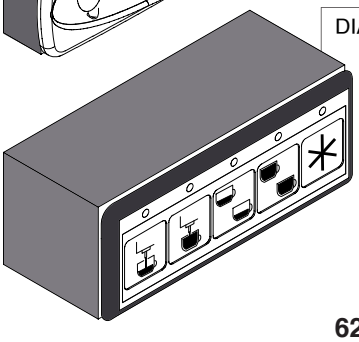

620734
GICAR CODE 9.9.07.41G

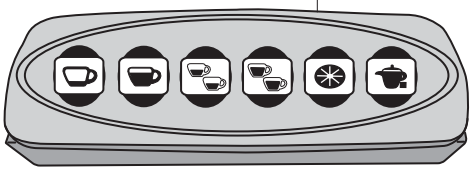

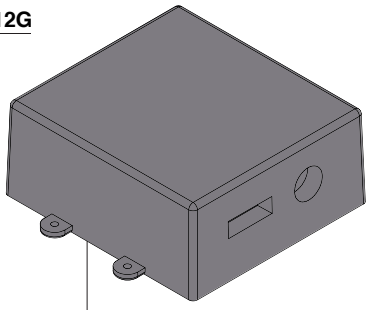

503010
ANTEA, CLASSICA, DIADEMA
DOGARESSA, GRANDOGE, TETIDE

503011
DE LUX, IMOLA, LIRAMARANELLO
MONZA, SYNCRO, VALLELUNGA

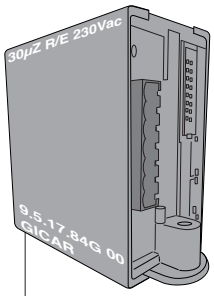

503053
GICAR CODE 9.5.17.84G00

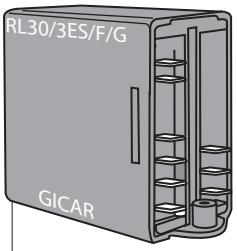

503050
GICAR CODE 9.1.29.05G00

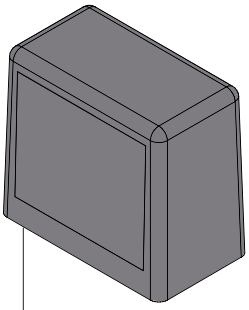

503012
GICAR CODE 9.9.04.20G
DIADEMA / DOGARESSA
IMOLA / MONZA / SYNCRO
TETIDE / VALLELUNGA

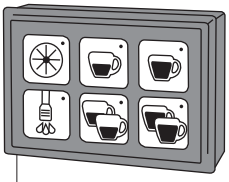

620705
GICAR CODE 9.9.09.28

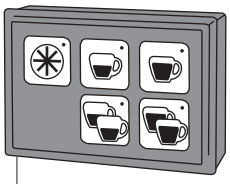

503026
GRANDOGE

620748
GICAR CODE 8.9.48.76

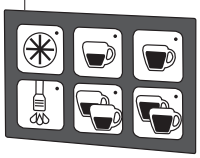

503061
GICAR CODE 9.9.09.62G

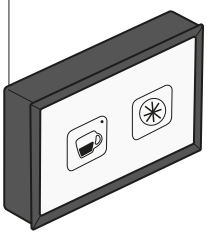

BRASILIA

Tav. 01

GRUPPO BE

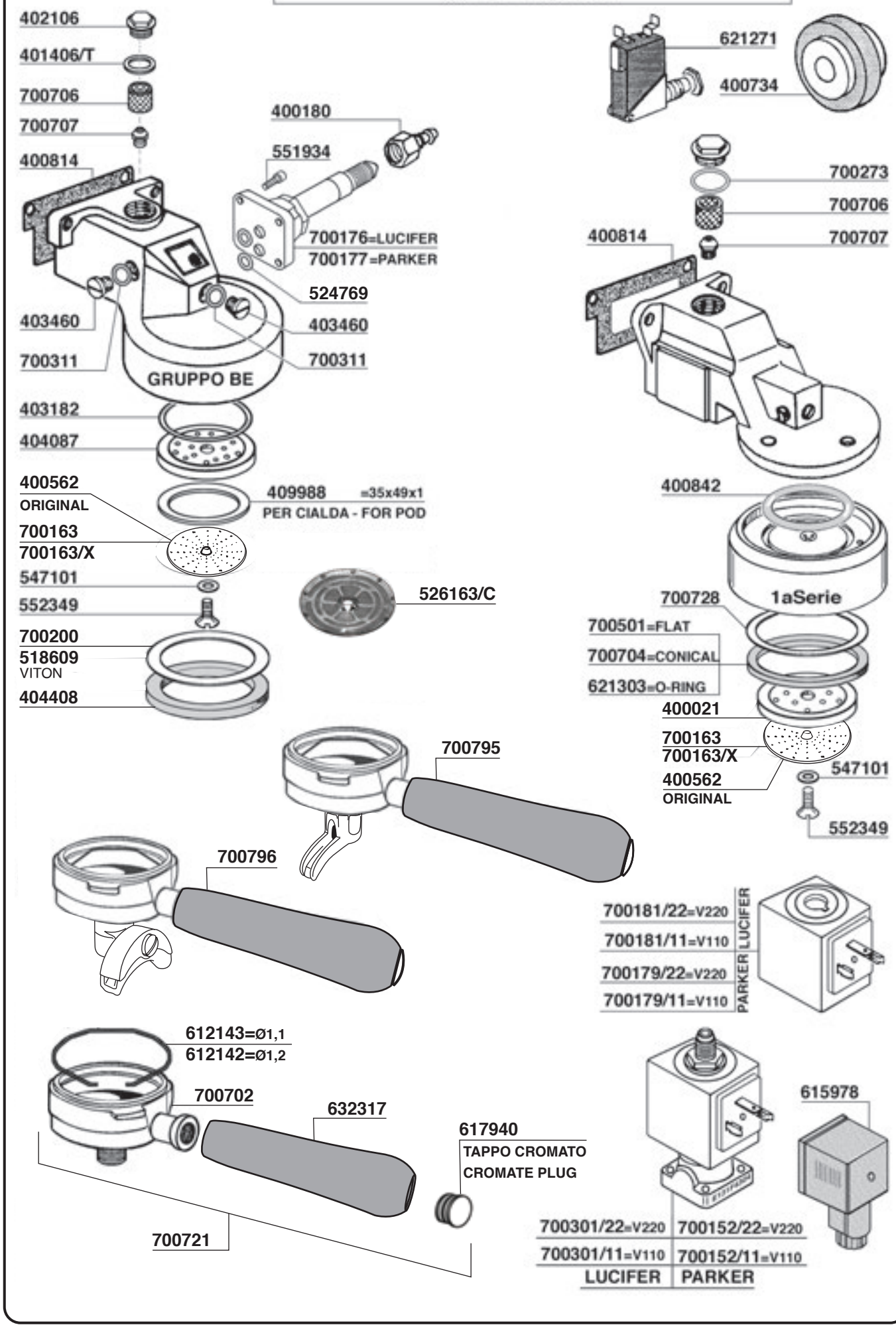

BRASILIA

Tav. 02

GRUPPO B61

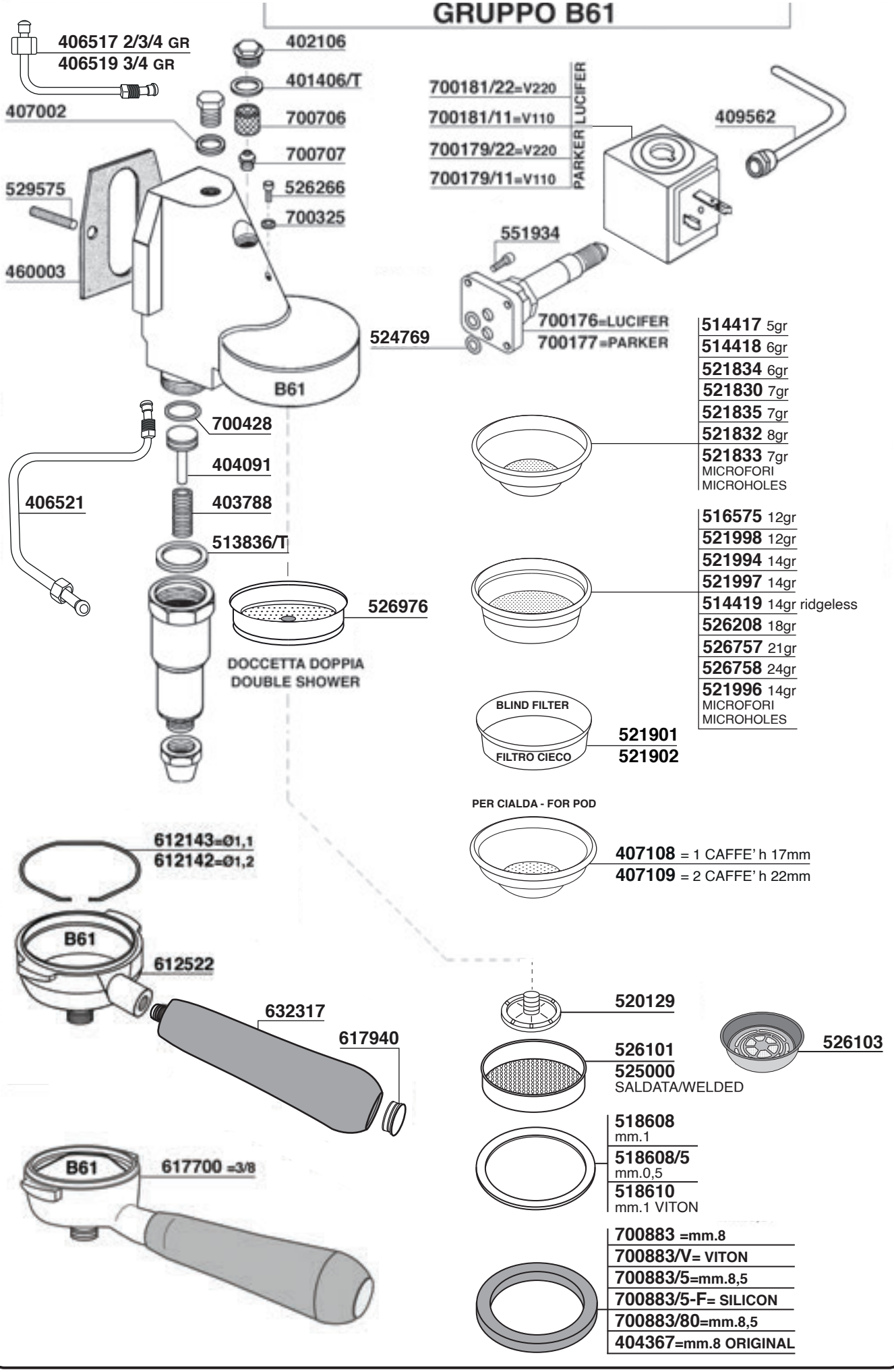

BRASILIA

Tav. 03

GRUPPO LEVA

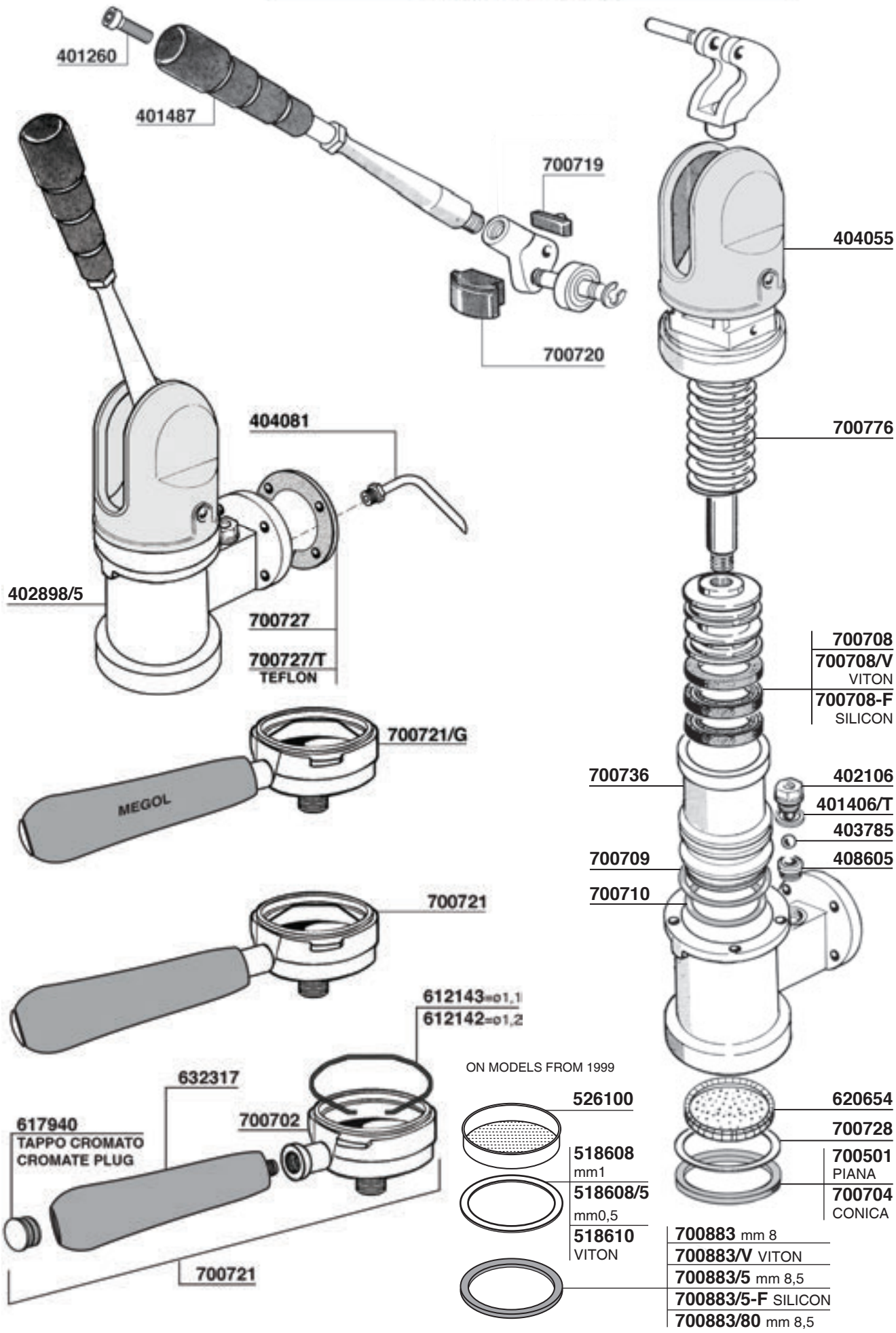

BRASILIA

Tav. 04

RUBINETTI BAR-AMERICA

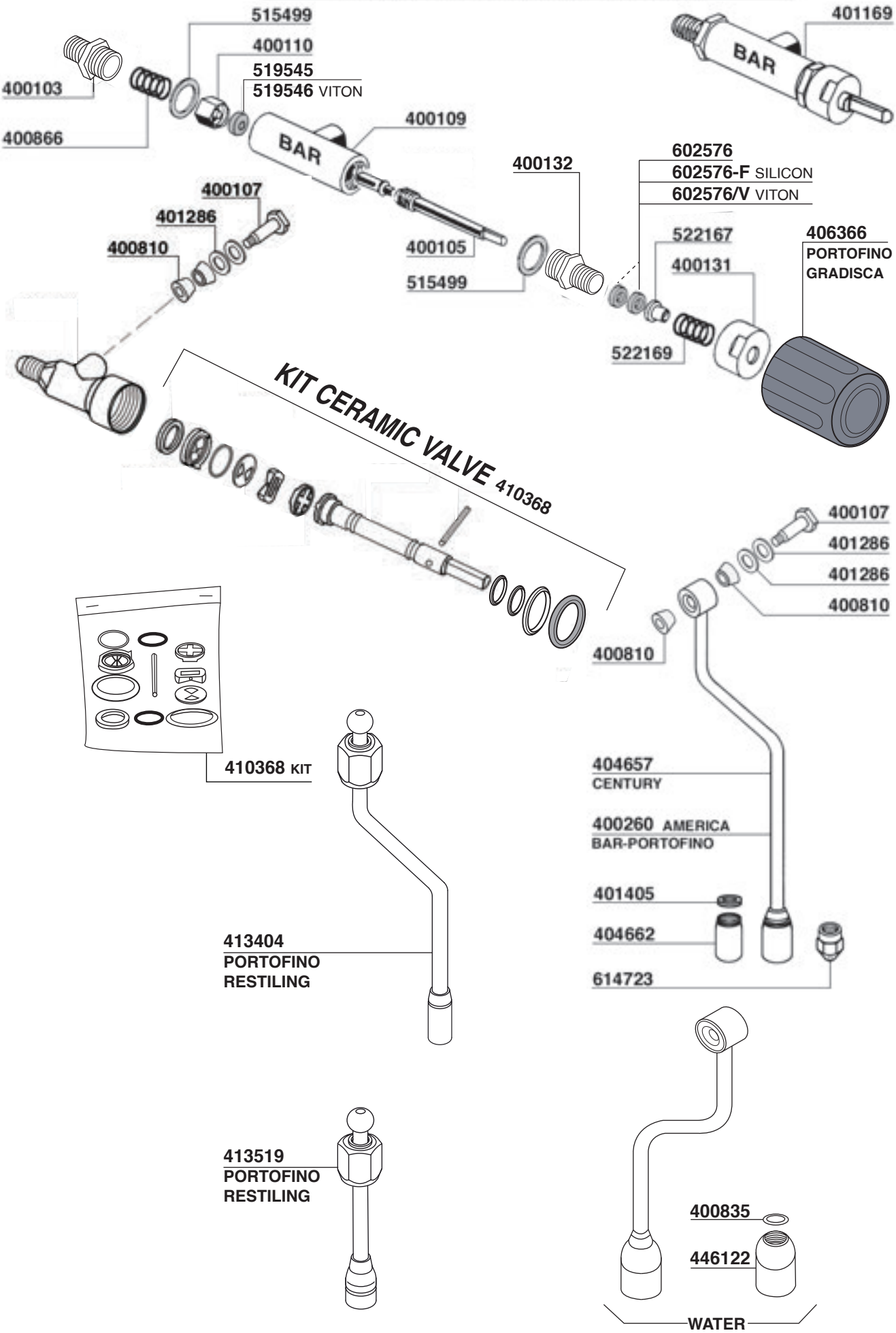

BRASILIA

Tav. 05

RUBINETTI

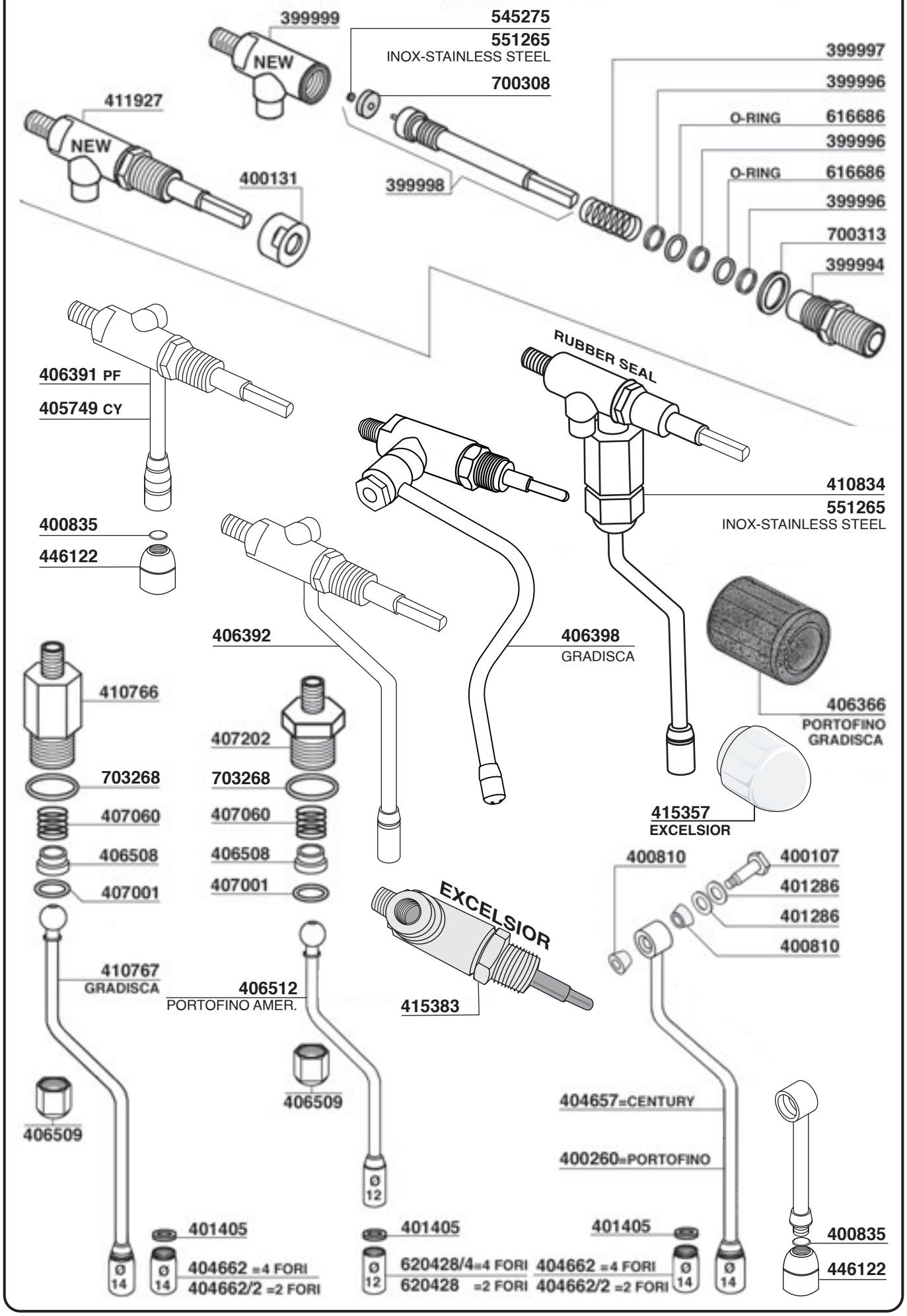

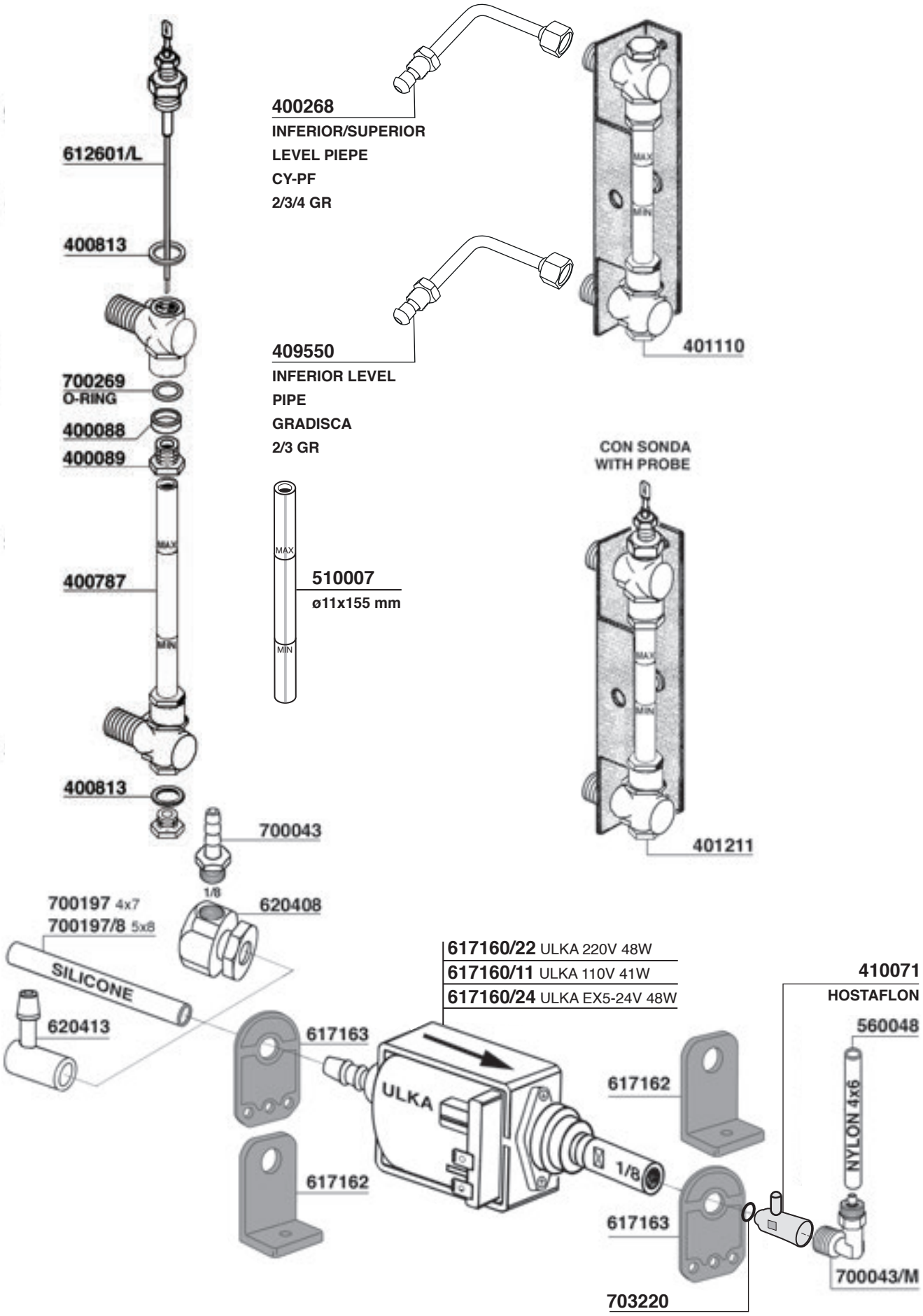
400268
INFERIOR/SUPERIOR
LEVEL PIEPE
CY-PF
2/3/4 GR
612601/L
400813
409550
INFERIOR LEVEL
PIPE
GRADISCA
2/3 GR
401110
700269
O-RING
400088
400089
CON SONDA
WITH PROBE
MAX
MIN
510007
ø11x155 mm
400787
400813
700043
1/8
401211
700197 4x7
700197/8 5x8
620408
SILICONE
620413
617160/22 ULKA 220V 48W
617160/11 ULKA 110V 41W
617160/24 ULKA EX5-24V 48W
410071
HOSTAFLON
560048
NYLON 4x6
617163
ULKA
617162
617162
1/8
617163
700043/M
703220

BRASILIA

CLUB - LADY

619293

617991/G

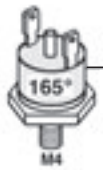

618964
MANUAL RESETTING

STEAM MICROPUMP

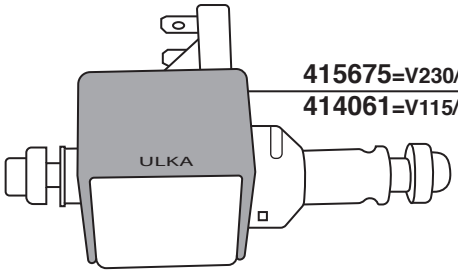

415675=V230/50
414061=V115/60

WATERLINE INDICATOR

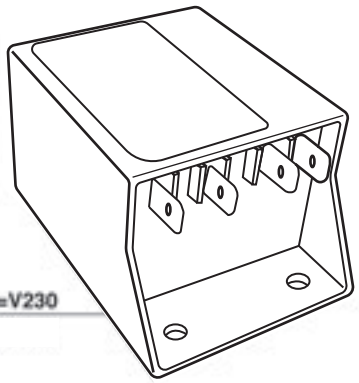

401878 =V230

400825

400835
O-RING

406366

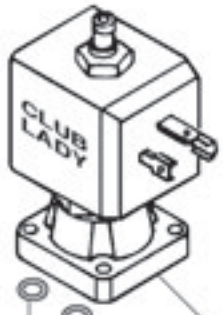

524767

401984 =V220

411443

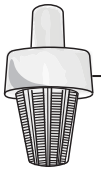

408818

CLUB - LADY

400836
O-RING

400625 =W1200 V230
400626 =W1200 V115

CLUB - LADY

530131
O-RING BOILER

401547
PIPE PUMP-
BOILER CLUB-LADY

400651

409207

FILTER HOLDER GASKET

CLUB

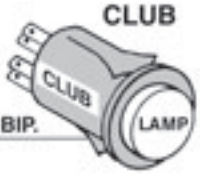

618010 V230 BIP.
SWITCH

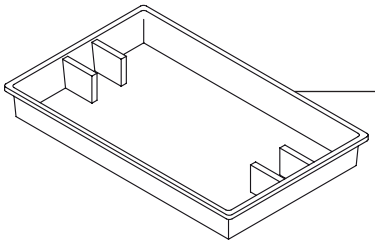

400776
DISCHARGE TANK
CLUB-LADY

700247 V250 BIP.
PUSH BUTTON

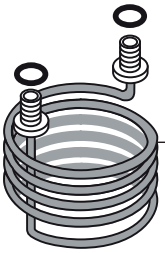

410432
HEATING ELEMENT
1000W 230V M10X1
CLUB-LADY

BRASILIA

Tav.08

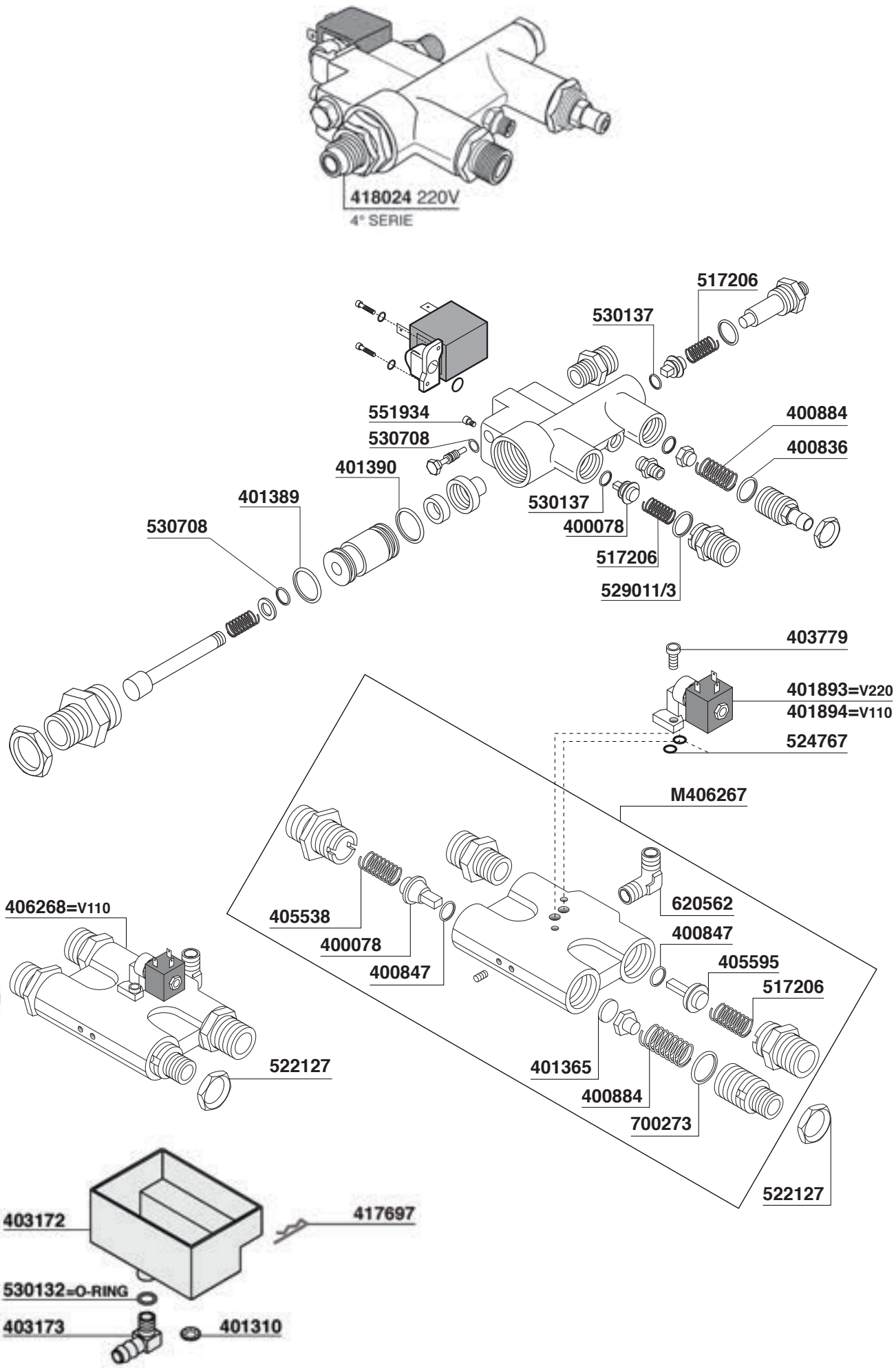

BRASILIA

Tav.09

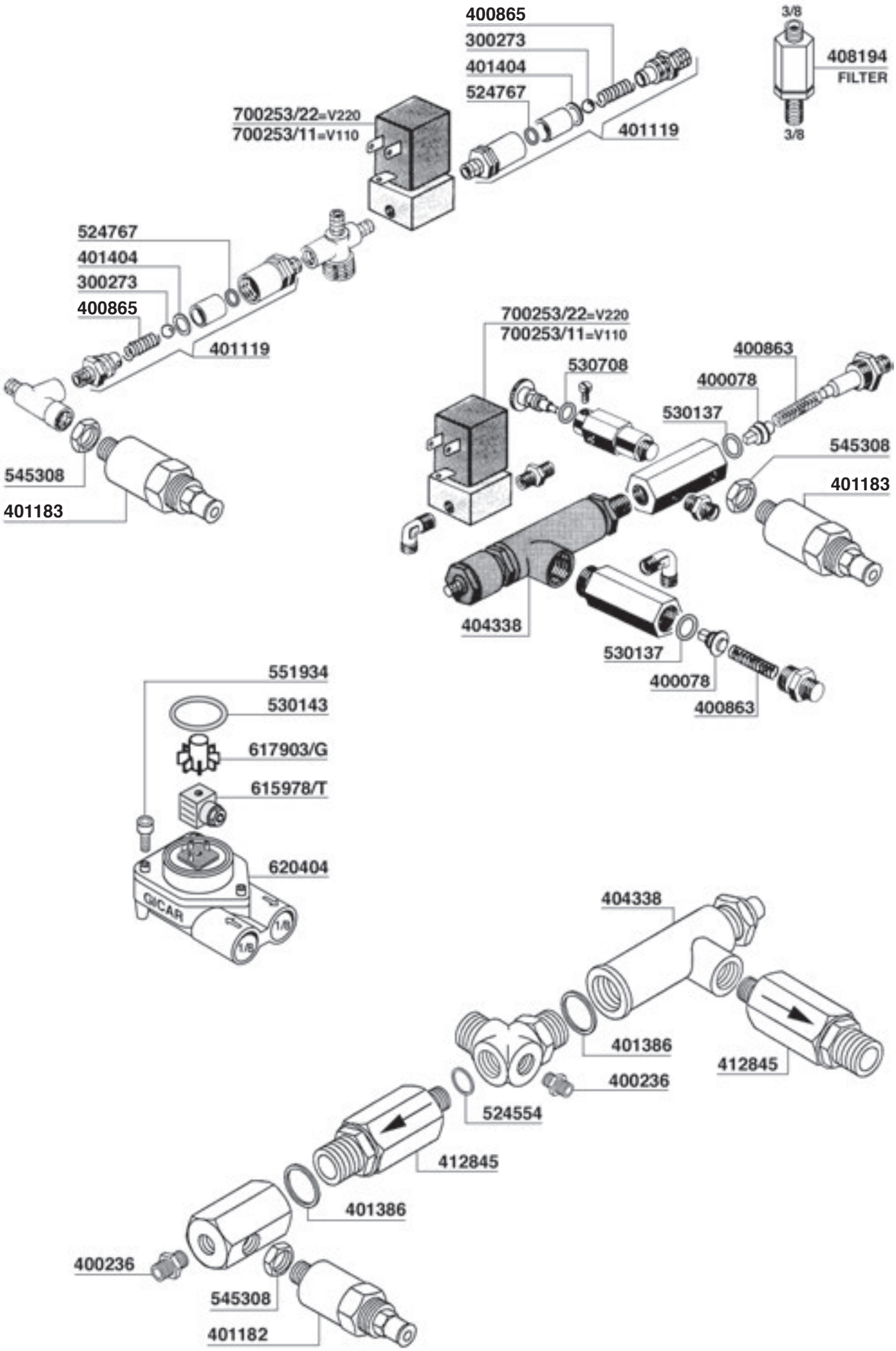

BRASILIA

Tav.10

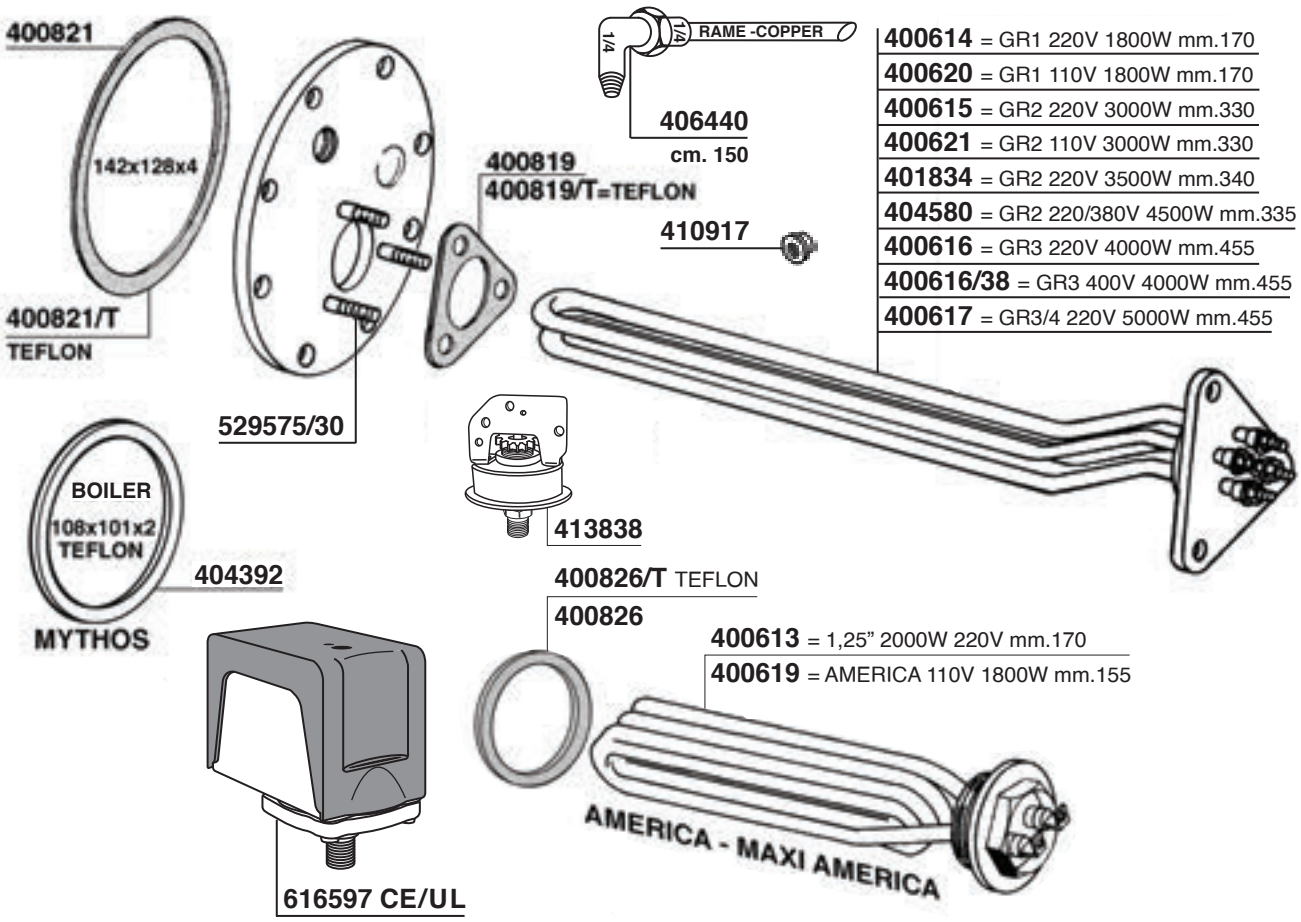

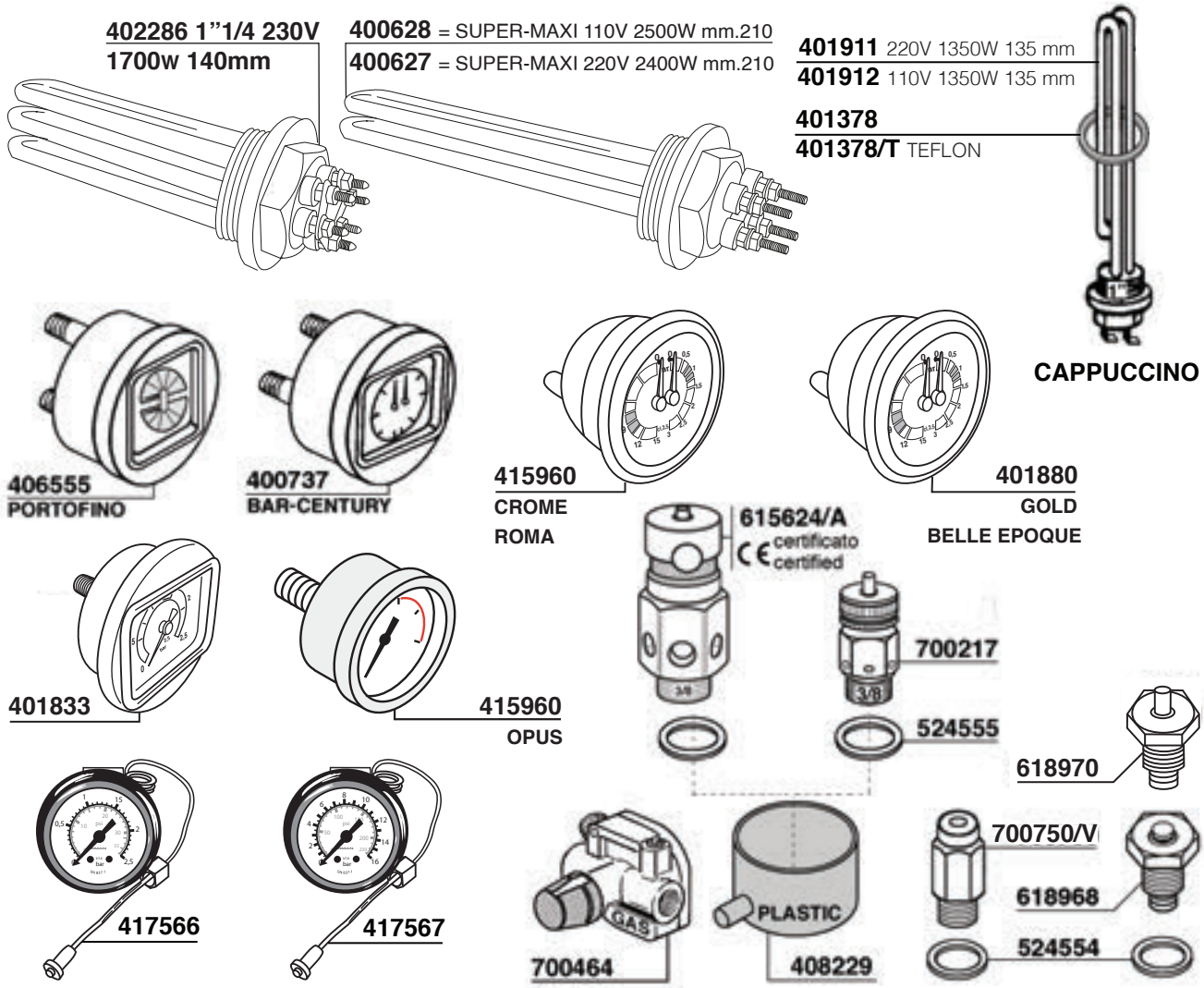

BRASILIA

Tav.11

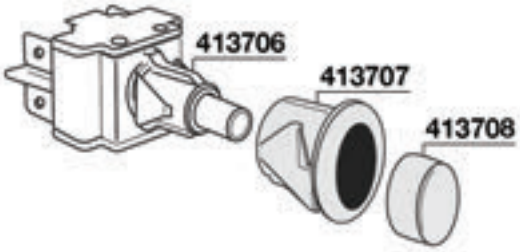

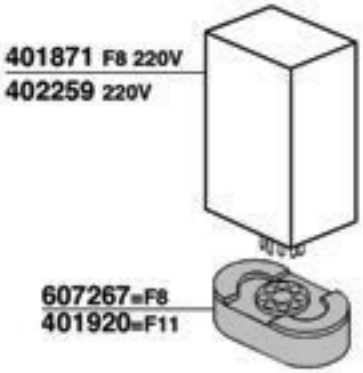

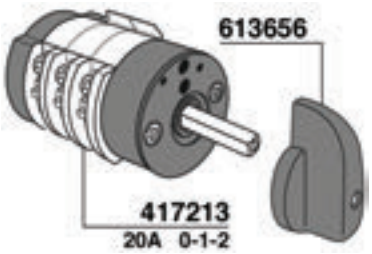

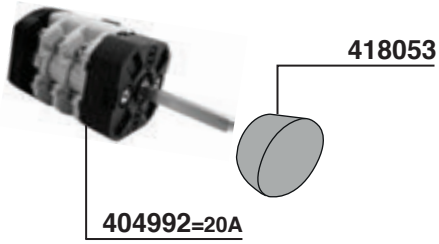

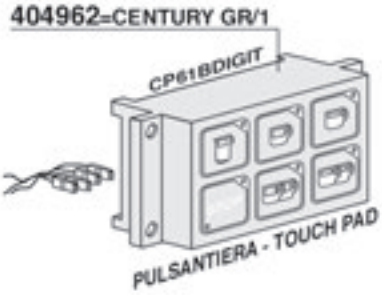

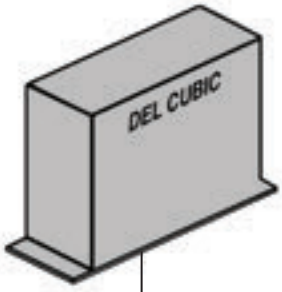

401807=GR/3 V220
401841=GR/3 V110

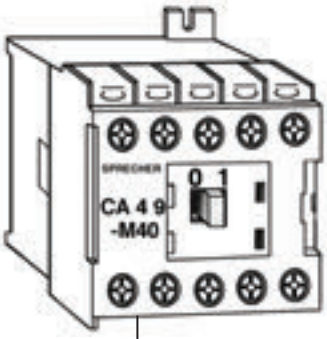

700653/22

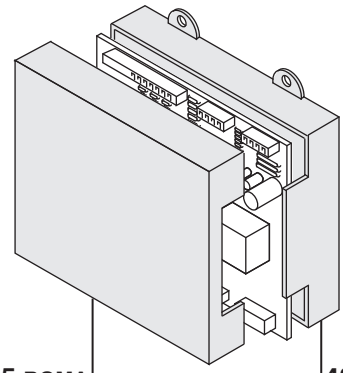

416035 ROMA
9.5.22.58 G00
GICAR CODE

423376 AGILE
9.5.25.69 G00
GICAR CODE

401975=INTERRUTTORE
SWITCH BIP.

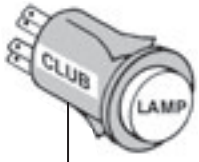

700247 V250 BIP.
PULSANTE
PUSH BOTTON

405475=CAPPUCC.CY XP61 V220

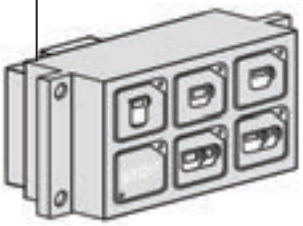

PULSANTIERA+CENTRALINA
TOUCH PAD+ELECTRONIC BOX

406556=XP65 GR/1 V220

PULSANTIERA+CENTRALINA
TOUCH PAD+ELECTRONIC BOX

408494=PORTOFINO V220
CENTURY V220 96'
408711=PORTOFINO V110
CENTURY V110 96'

PULSANTIERA+CENTRALINA
TOUCH PAD+ELECTRONIC BOX

413426=105 - 205
CENTURY 02'
PORTOFINO

PULSANTIERA - TOUCH PAD

413123

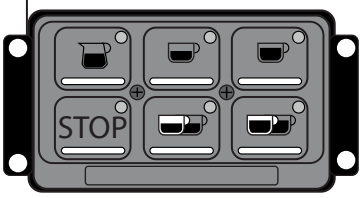

RESTYLING MODEL

417578 ROMA
GICAR CODE 9.9.07.26G

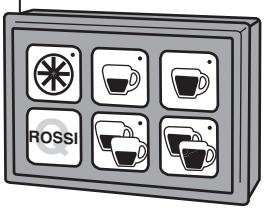

418748=OPUS 14 PIN
420250=SUBLIMA 16 PIN

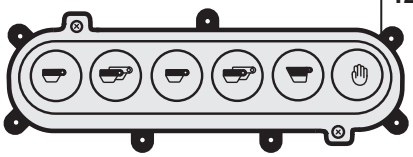

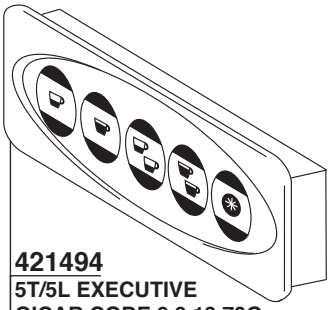

421494
5T/5L EXECUTIVE
GICAR CODE 9.9.13.70G

422706
FRESCOBALDI-MAJOR 5T/5L
GICAR CODE 9.9.14.83G

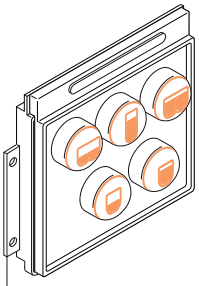

414484
EXCELSIOR

419424
BLU AGILE H20
GICAR CODE 9.9.13.21G

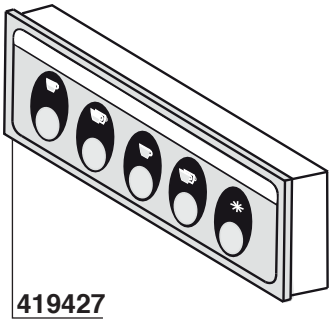

419427
BLU AGILE / CADETTA 5T/5L
GICAR CODE 9.9.13.22G

BRASILIA

413420=GR2 V220	01.14.0077
413421=GR3 V220	01.14.0079
413422=GR4 V220	01.14.0076
413423=GR2 V240	01.14.0085
413425=GR3 V240	01.14.0083

RESTYLING MODEL

409950=GR/2V220
409952=GR/3V220
409953=GR/4V220

A=POMPA AUTOL.
B=DOSATURA H2O
C=GRUPPO 1
D=GRUPPO 2
E=GRUPPO 3
F=GRUPPO 4

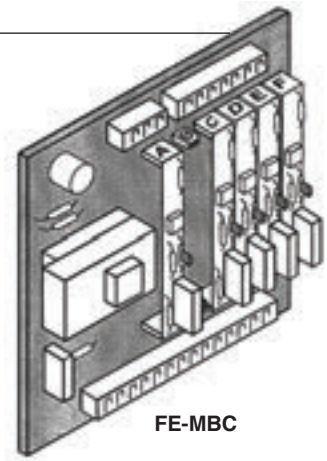

FE-MBC

410141 FLAT CABLE GR/2 DIGIT BAR

410142 FLAT CABLE GR/3 DIGIT BAR

418306 230V
CENTRALINA PER
DISPLAY HW
01.14.0179

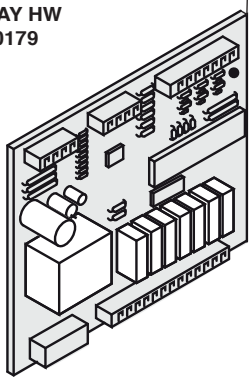

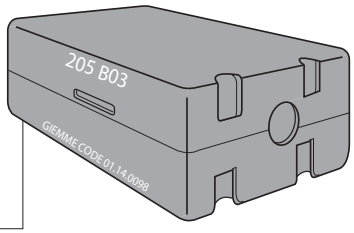

414133
CENTR.PER DISPLAY
230V PROFESSIONAL
01.14.0098

417836 230V
CENTRALINA 3
GR OPUS
01.14.0162

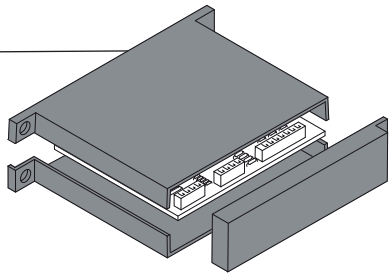

415954 230V
CENTRALINA 2/3
GR EXELCIOR
01.14.0138

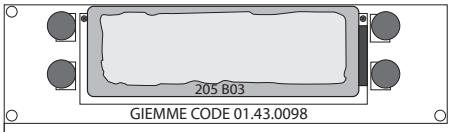

414134
DISPLAY C/TASTI
PROGRAMMAZ. PROFESSIONAL
01.43.0098

424069
SUBLIMA 230V

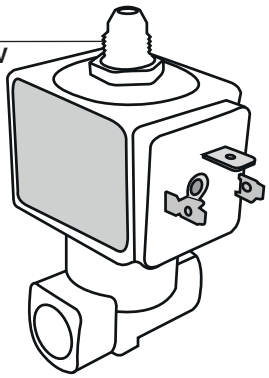

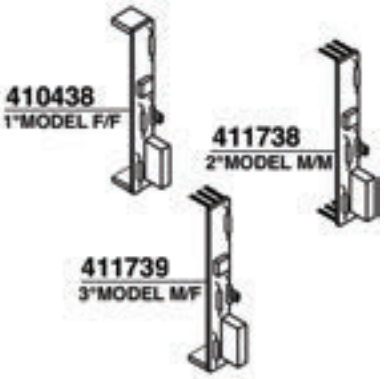

CARIMALI

Tav. 01

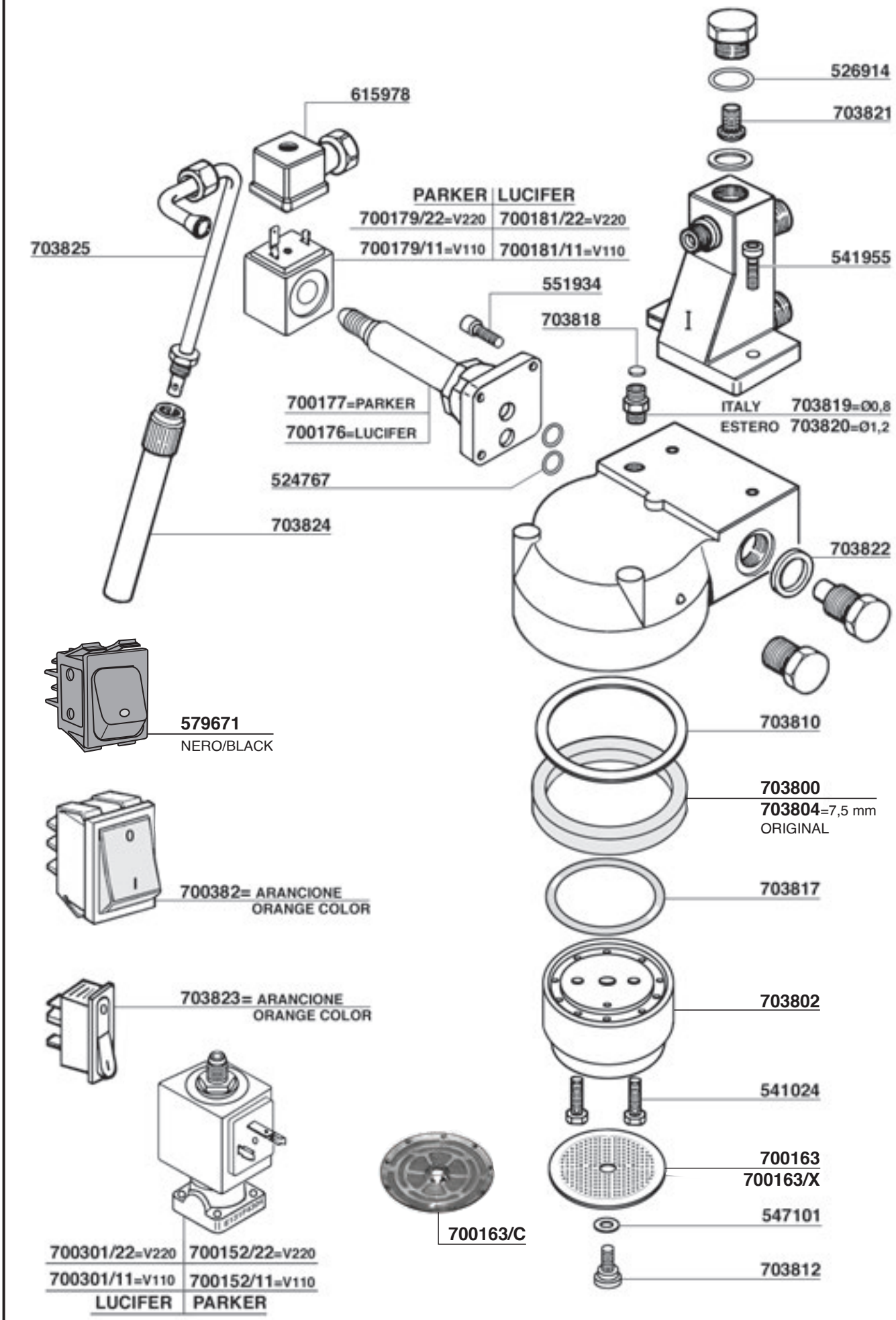

CARIMALI

Tav. 02

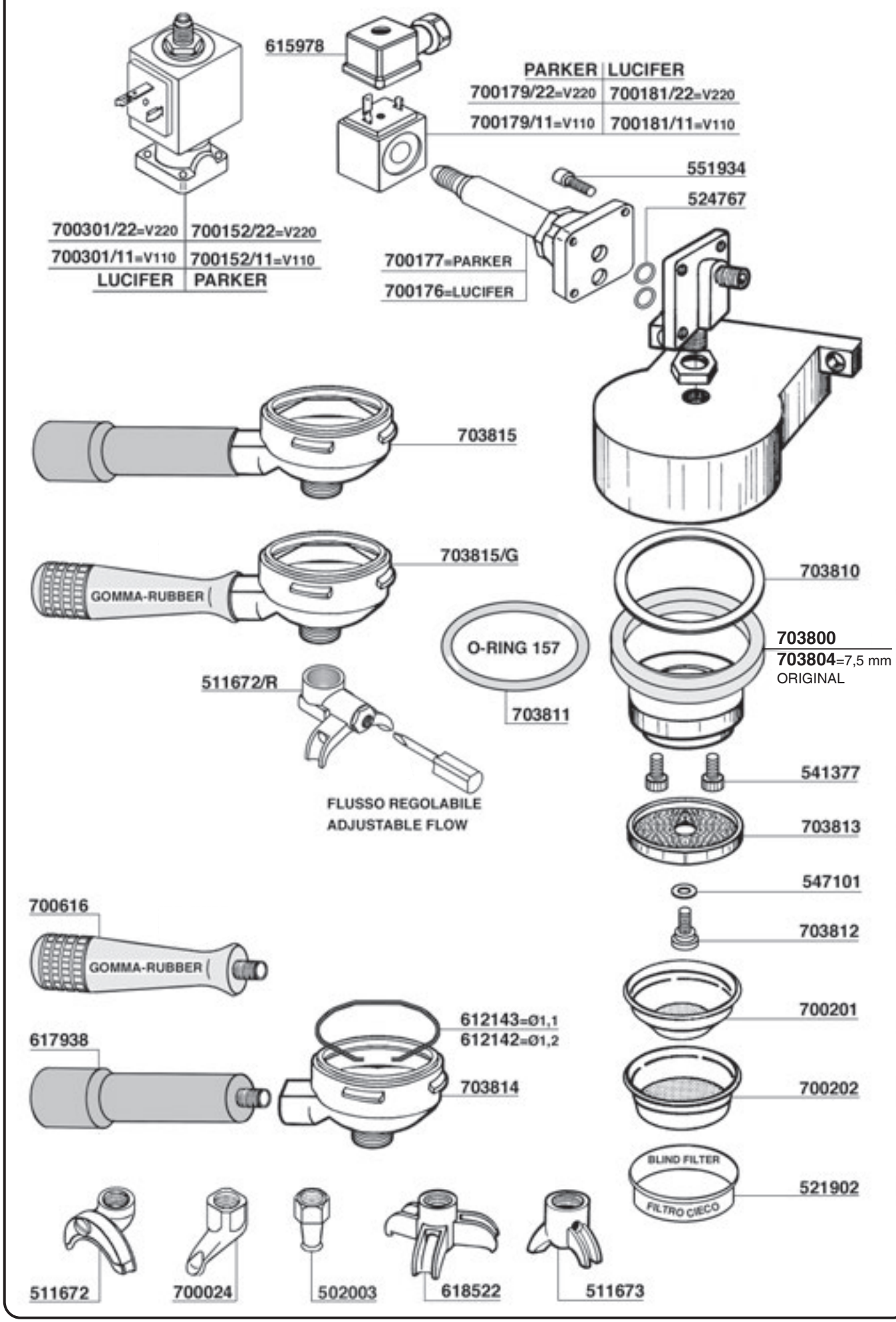

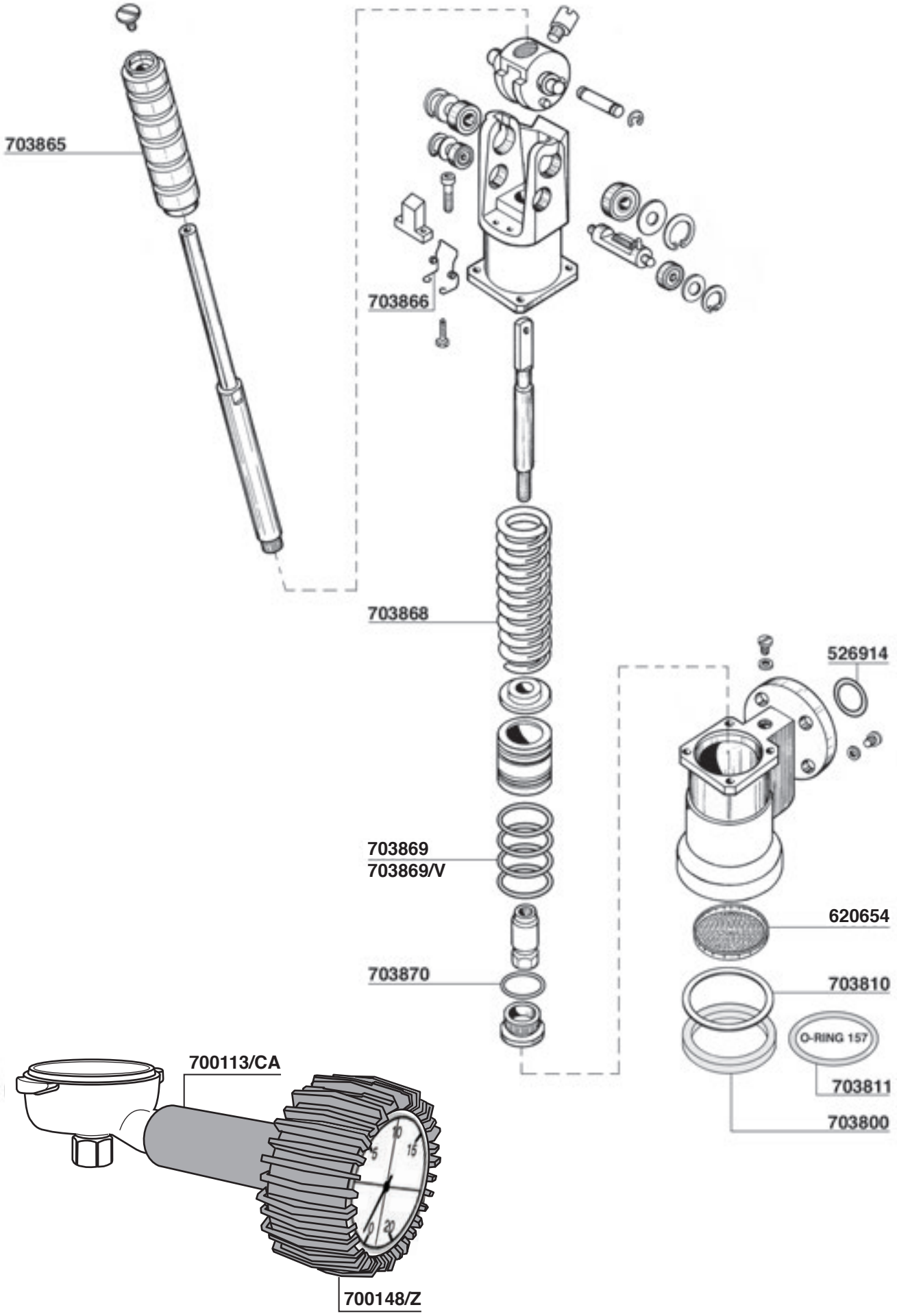
703865
703866
703868
526914
703869
703869/V
620654
703870
703810
O-RING 157
703811
703800
700113/CA
700148/Z

CARIMALI

Tav. 04

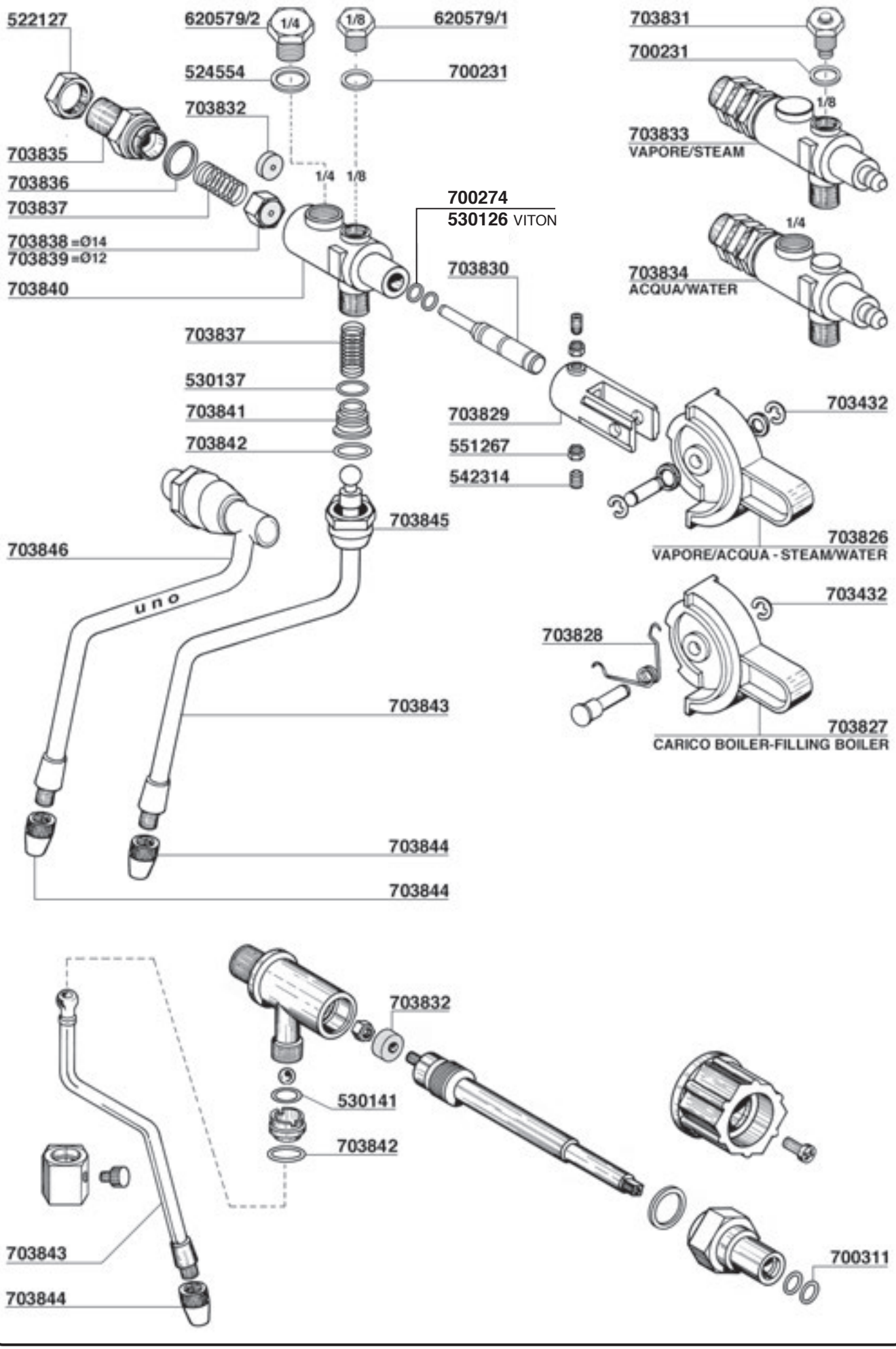

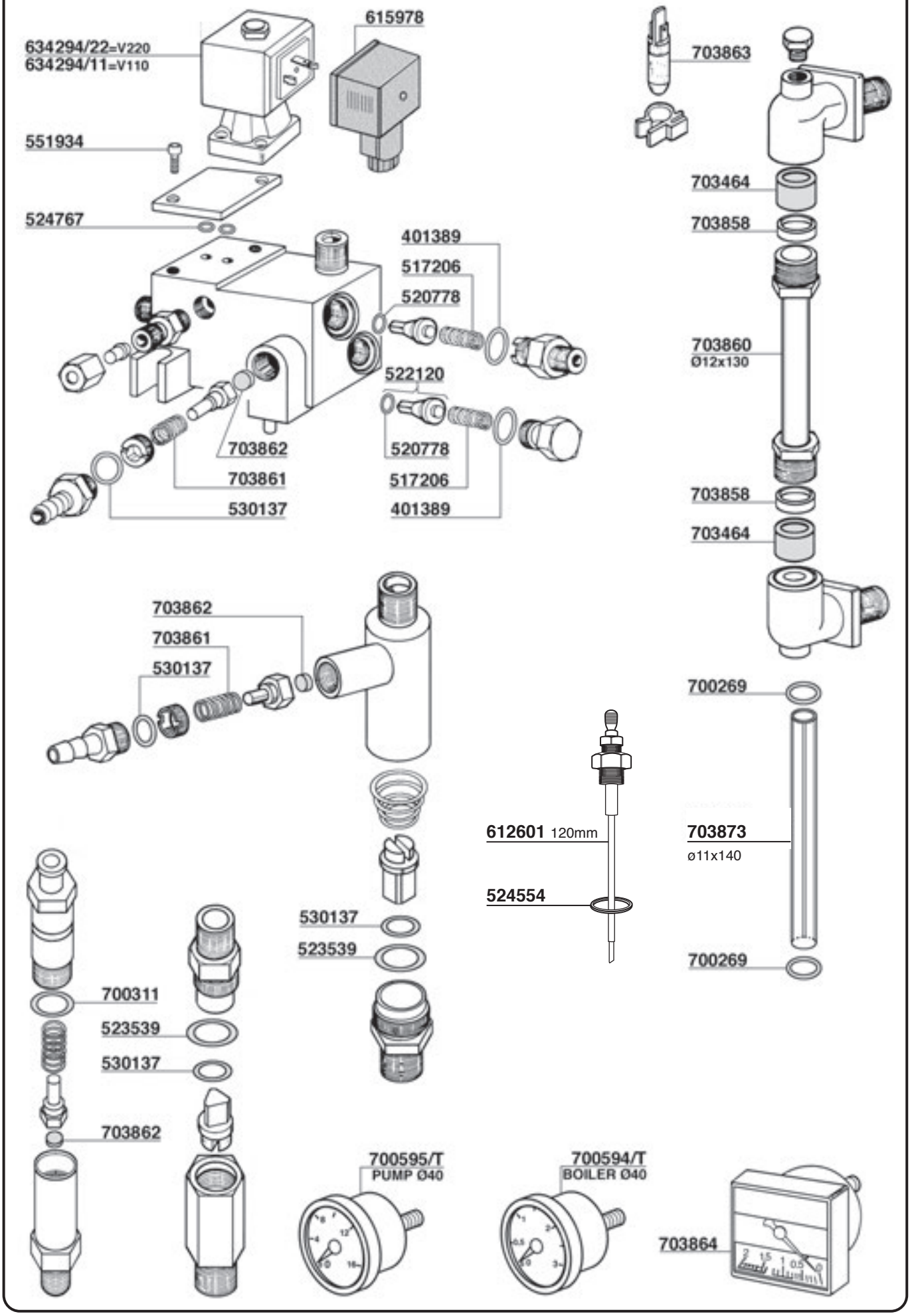
634294/22=V220
634294/11=V110
615978
551934
524767
401389
517206
520778
522120
703862
703861
530137
520778
517206
401389
703863
703464
703858
703860
Ø12x130
703858
703464
703862
703861
530137
700269
612601 120mm
524554
703873
ø11x140
700269
530137
523539
700311
523539
530137
703862
700595/T
PUMP Ø40
700594/T
BOILER Ø40
703864

CARIMALI

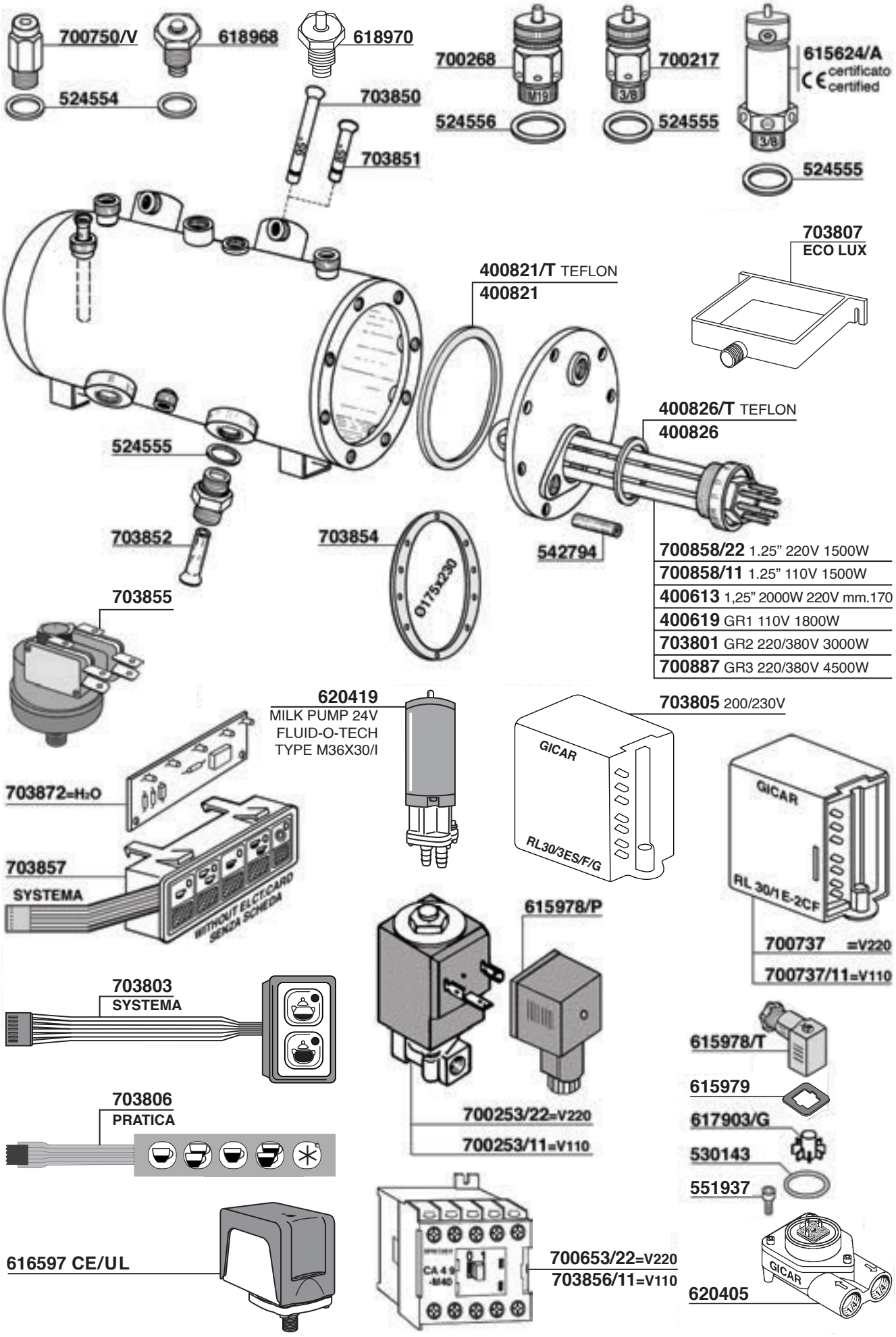
700750/V
618968
618970
524554
703850
703851
700268
M19
524556
700217
3/8
524555
615624/A
certificato
certified
3/8
524555
703807
ECO LUX
400821/T TEFLON
400821
400826/T TEFLON
400826
524555
703852
703854
O175x230
542794
700858/22 1.25" 220V 1500W
700858/11 1.25" 110V 1500W
400613 1,25" 2000W 220V mm.170
400619 GR1 110V 1800W
703801 GR2 220/380V 3000W
700887 GR3 220/380V 4500W
703855
620419
MILK PUMP 24V
FLUID-O-TECH
TYPE M36X30/I
703805 200/230V
GICAR
RL30/3ES/F/G
GICAR
RL 30/1 E-2CF
700737 =V220
700737/11=V110
703872=H2O
703857
SYSTEMA
WITHOUT ELCT.CARD
SENZA SCHEDA
615978/P
703803
SYSTEMA
615978/T
615979
617903/G
530143
551937
703806
PRATICA
700253/22=V220
700253/11=V110
616597 CE/UL
CA 4 9
-M40
700653/22=V220
703856/11=V110
GICAR
620405

PARTI COMPATIBILI CASADIO Tav. 01

DIECI A/S - UNDICI A/S - DODICI A/S

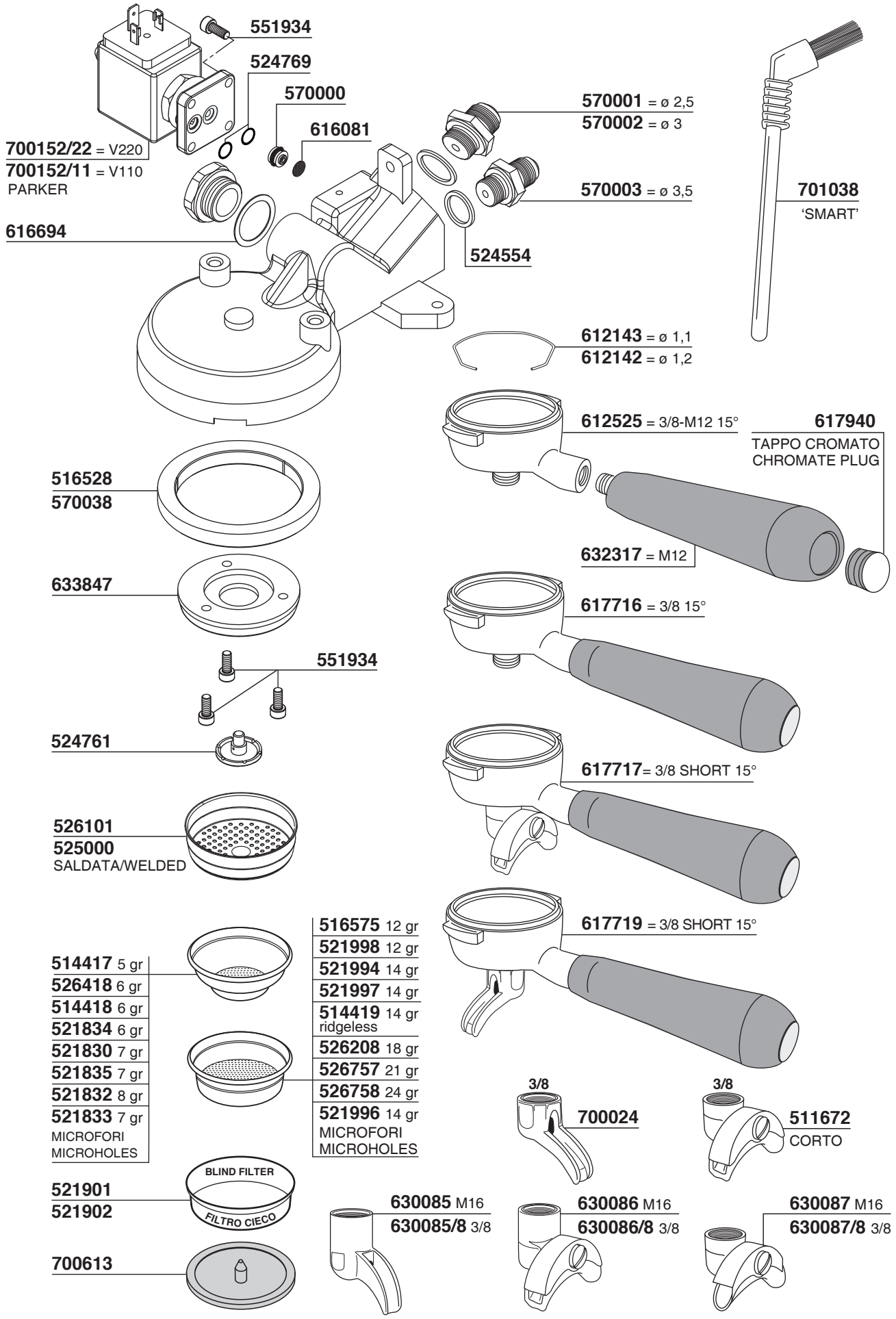

PARTI COMPATIBILI CASADIO Tav. 02

QUINDICI

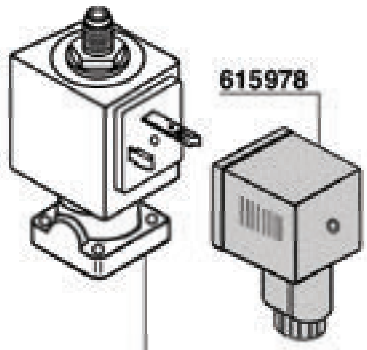

PARKER	LUCIFER
700152/22=V220	700301/22=V220
700152/11=V110	700301/11=V110
	700301/24=V24

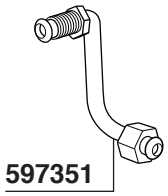

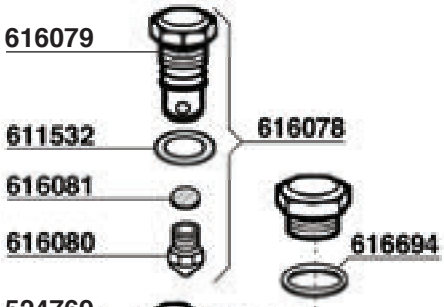

700177=PARKER
700176=LUCIFER

524769

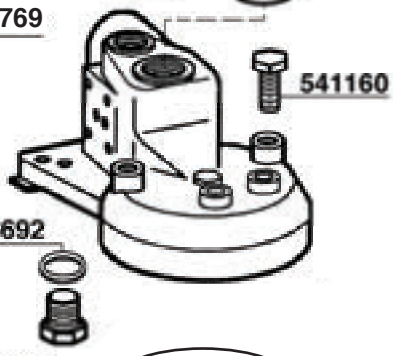

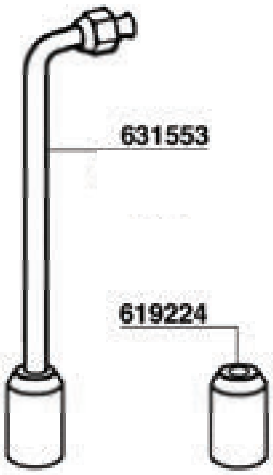

PARKER	LUCIFER
700179/22 =V220	700181/22 =V220
700179/11 =V110	700181/11 =V110
591753 =V24 DC	

633847

524761

551934

526976

DOCCETTA DOPPIA
DOUBLE SHOWER

526100

525000
SALDATA/WELDED

518608

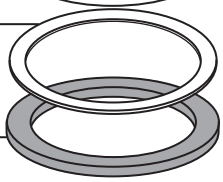

516528=8mm
516528/V VITON
700006=8,5mm
700007=9mm
570038=8mm

526103/C

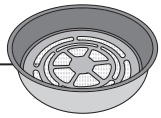

521902
BLIND FILTER

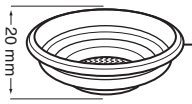

514418 6gr

521830 7gr
521832 8gr
521833 7gr
MICROFORI
MICROHOLES

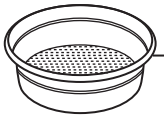

521994 14gr
514419 14gr ridgeless
516575 12gr
526208 18gr
700757 21gr
526758 24gr
521996 14gr
MICROFORI
MICROHOLES

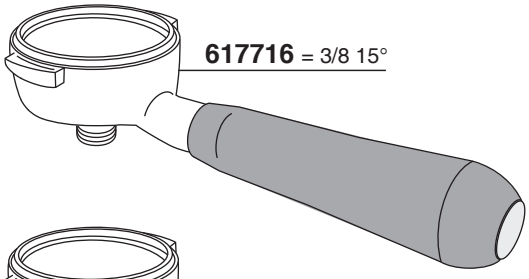

617716 = 3/8 15°

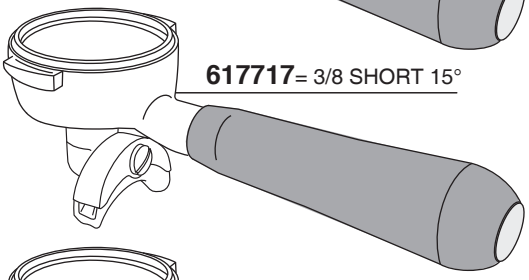

617717= 3/8 SHORT 15°

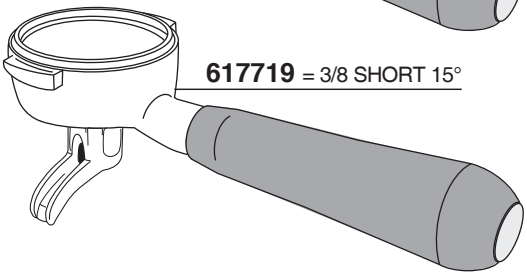

617719 = 3/8 SHORT 15°

VENTI

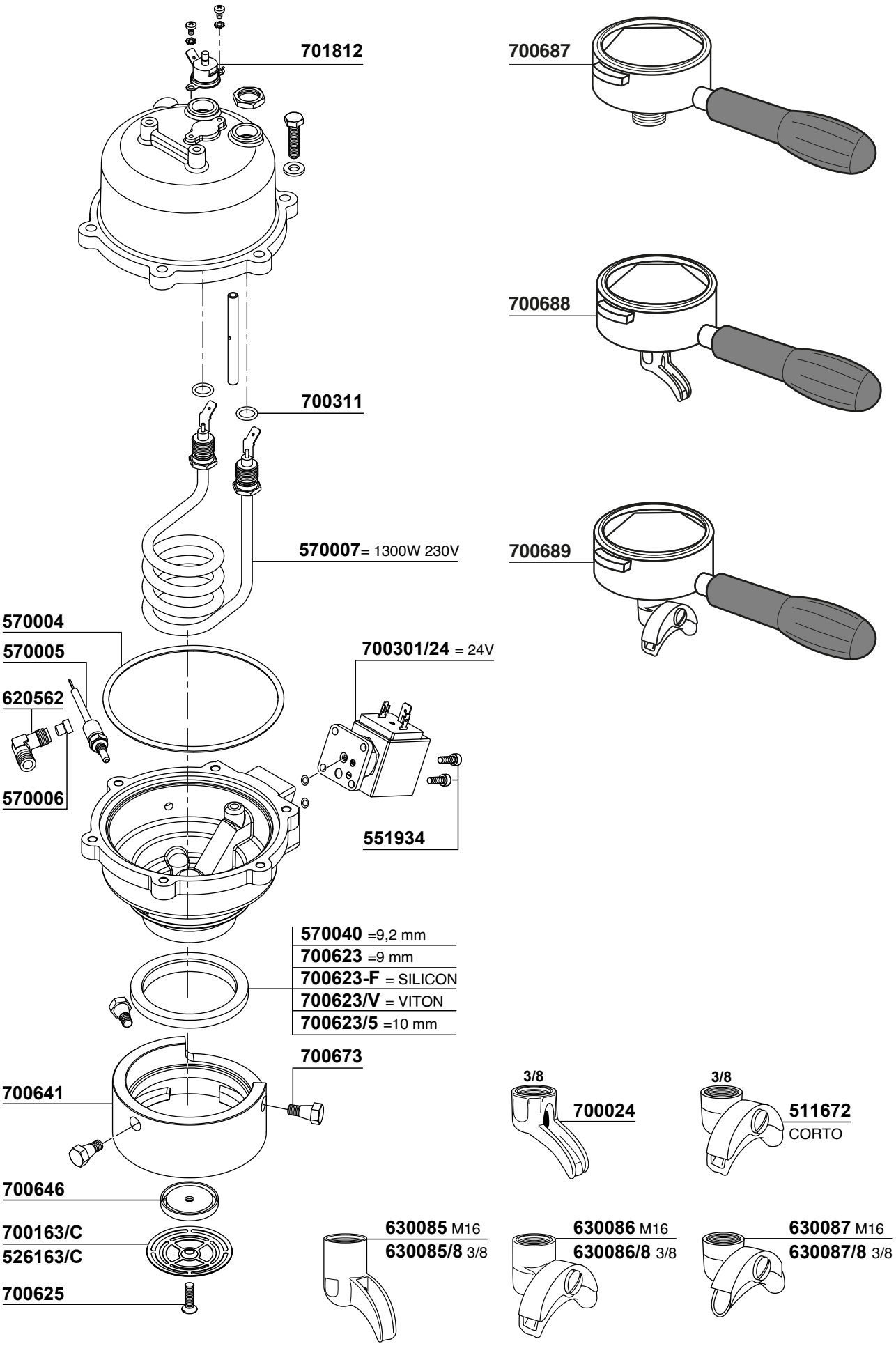
701812
700687
700688
700311
570007 = 1300W 230V
700689
570004
570005
620562
570006
700301/24 = 24V
551934
570040 =9,2 mm
700623 =9 mm
700623-F = SILICON
700623/V = VITON
700623/5 =10 mm
700673
700641
3/8
700024
3/8
511672
CORTO
700646
700163/C
526163/C
700625
630085 M16
630085/8 3/8
630086 M16
630086/8 3/8
630087 M16
630087/8 3/8

PARTI COMPATIBILI CASADIO Tav. 04

DIECI A/S - UNDICI A/S - DODICI A/S
QUINDICI A/S - VENTI

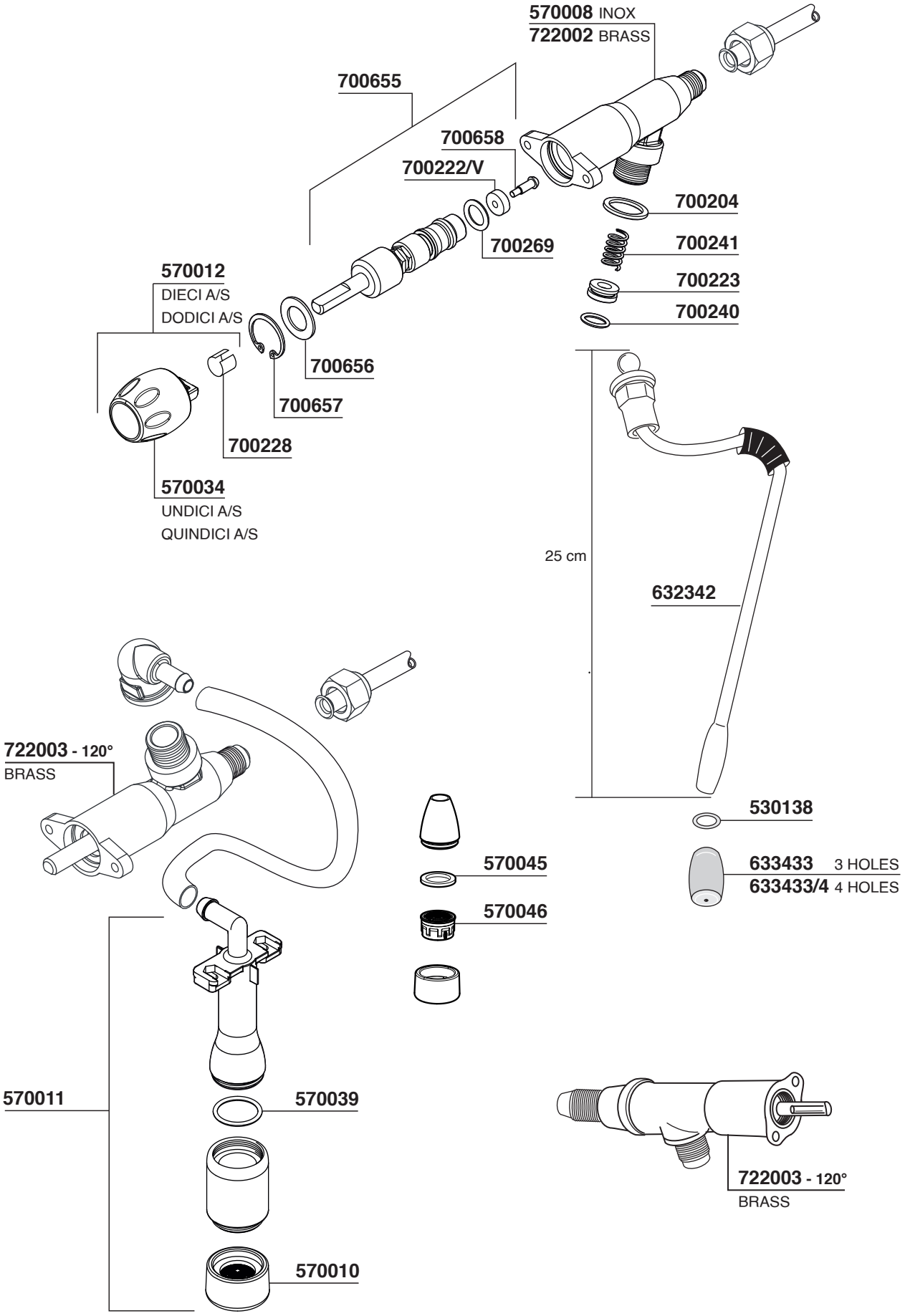

PARTI COMPATIBILI CASADIO Tav. 05

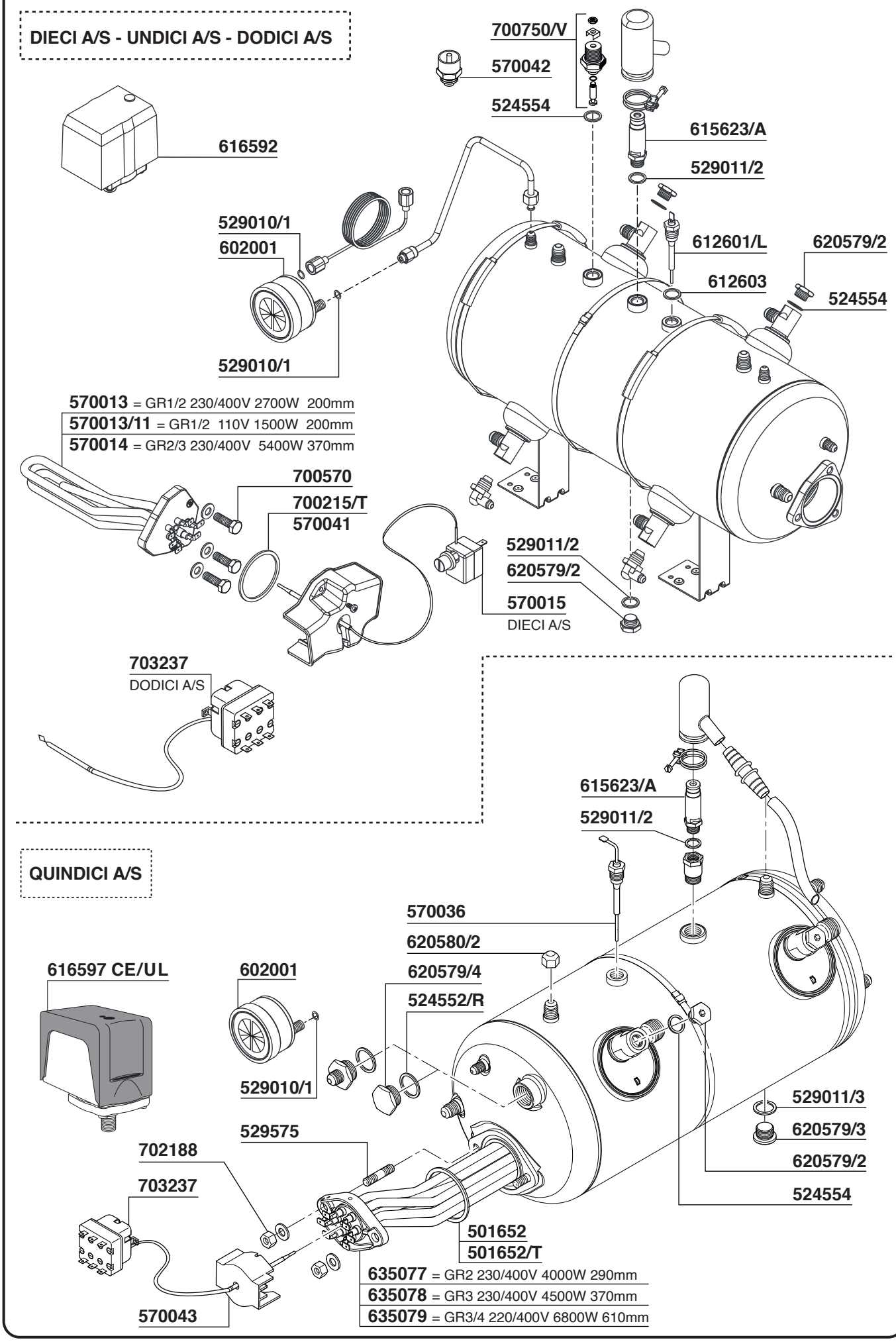

PARTI COMPATIBILI CASADIO Tav. 06

VENTI

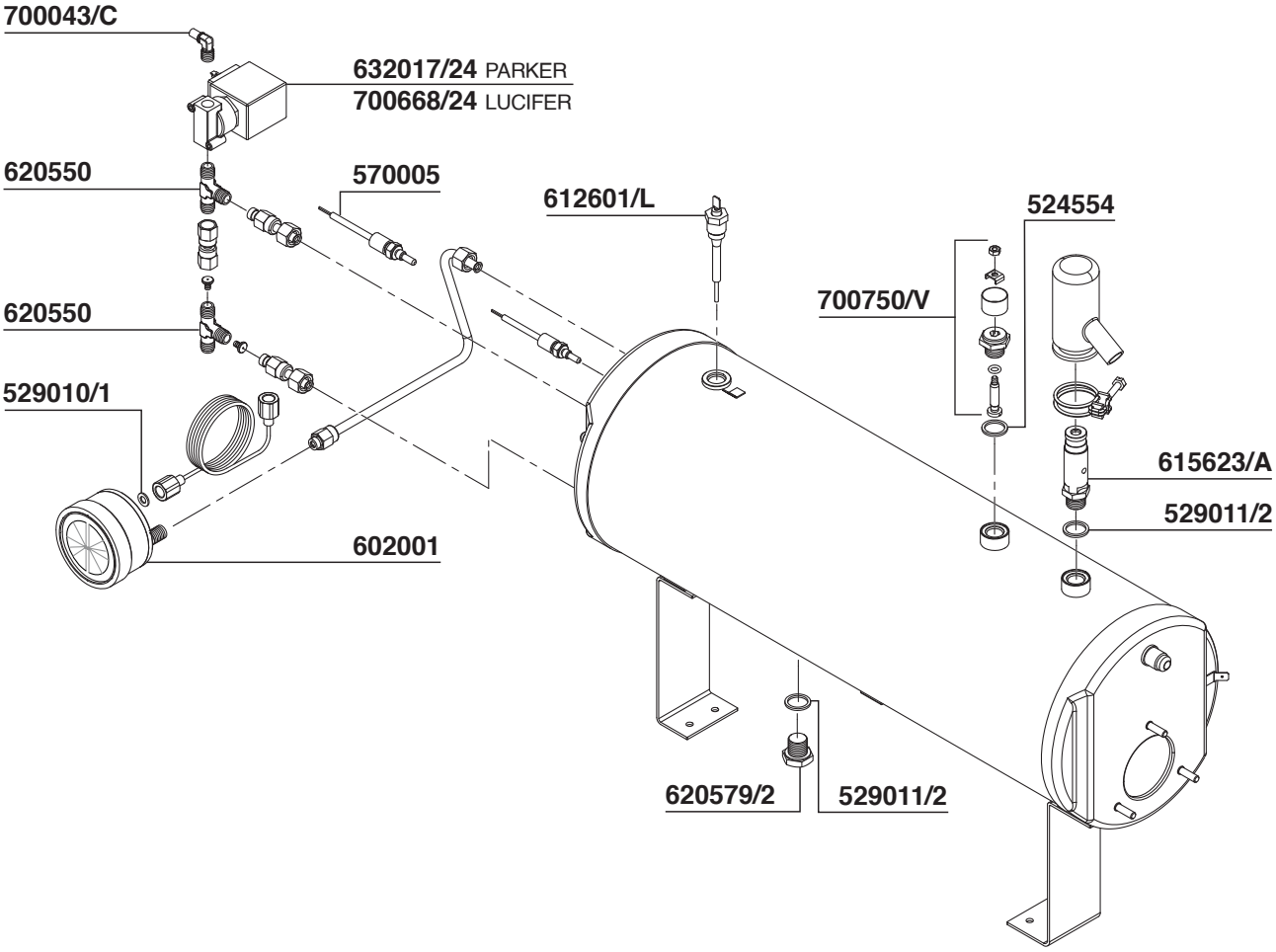

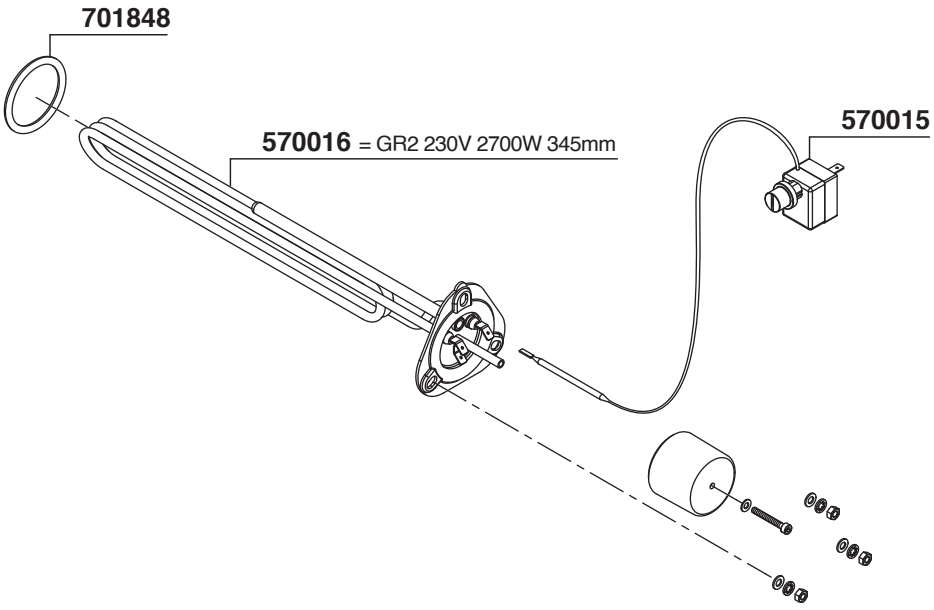

PARTI COMPATIBILI CASADIO Tav. 07

DIECI A/S - UNDICI A/S - DODICI A/S
QUINDICI A/S - VENTI

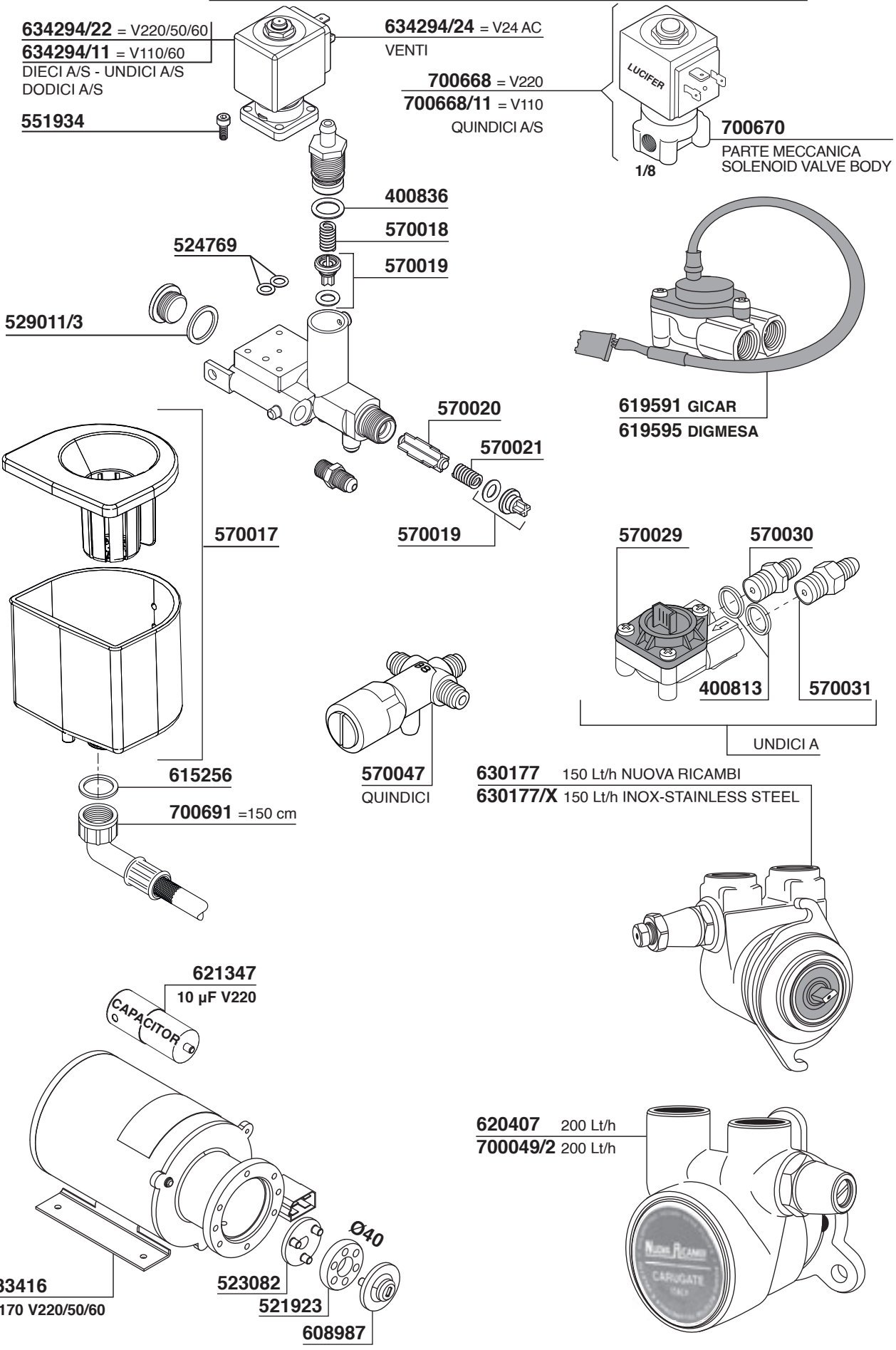

PARTI COMPATIBILI CASADIO Tav. 08

DIECI A/S - UNDICI A/S - DODICI A/S QUINDICI A/S - VENTI

570022

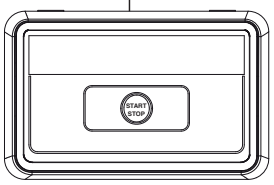

DIECI S

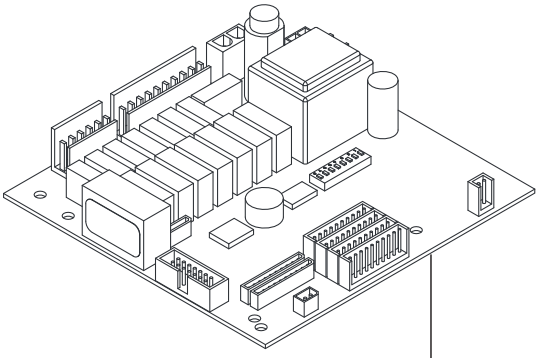

570024 DIECI A/S - UNDICI A/S
DODICI A/S - QUINDICI A/S

570023

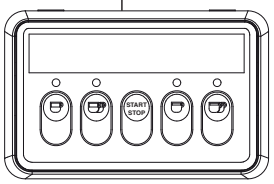

DIECI A

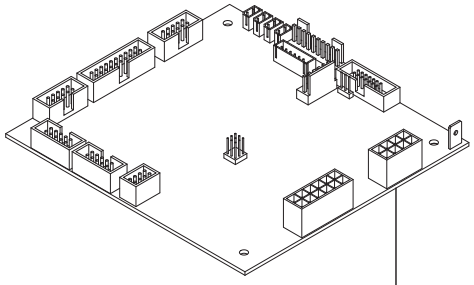

570028 VENTI

570026

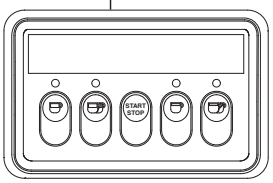

DODICI A

619006
QUINDICI S

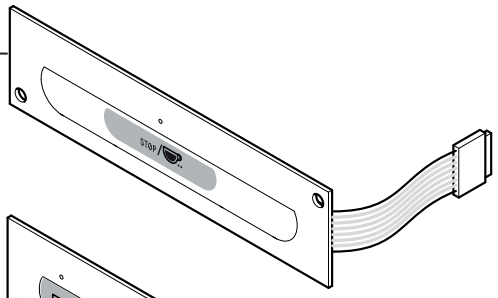

570032
UNDICI A

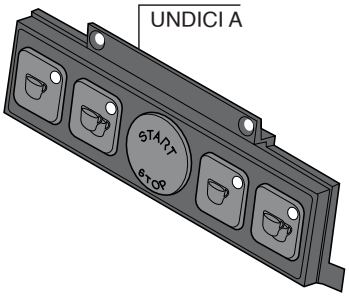

570033
UNDICI S

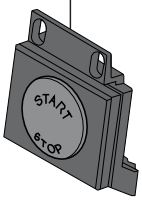

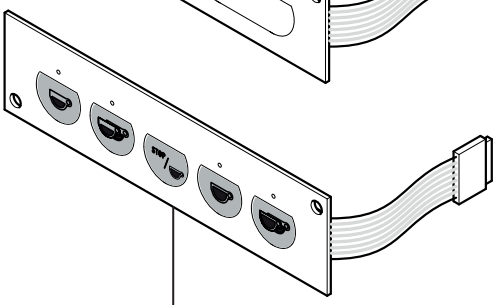

570037
QUINDICI A

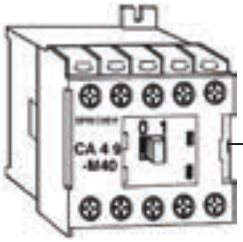

700653/22=V220
DIECI A/S - UNDICI A/S - VENTI

700238
DODICI A/S - QUINDICI A/S

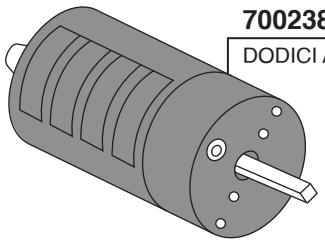

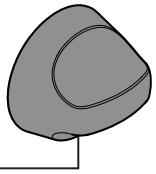

570044
DODICI A/S - QUINDICI A/S

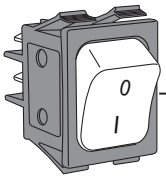

700429/V
DIECI A/S - UNDICI A/S - VENTI

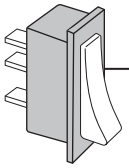

703823
DODICI A/S - QUINDICI A/S

PARTI COMPATIBILI CIMBALI Tav. 01

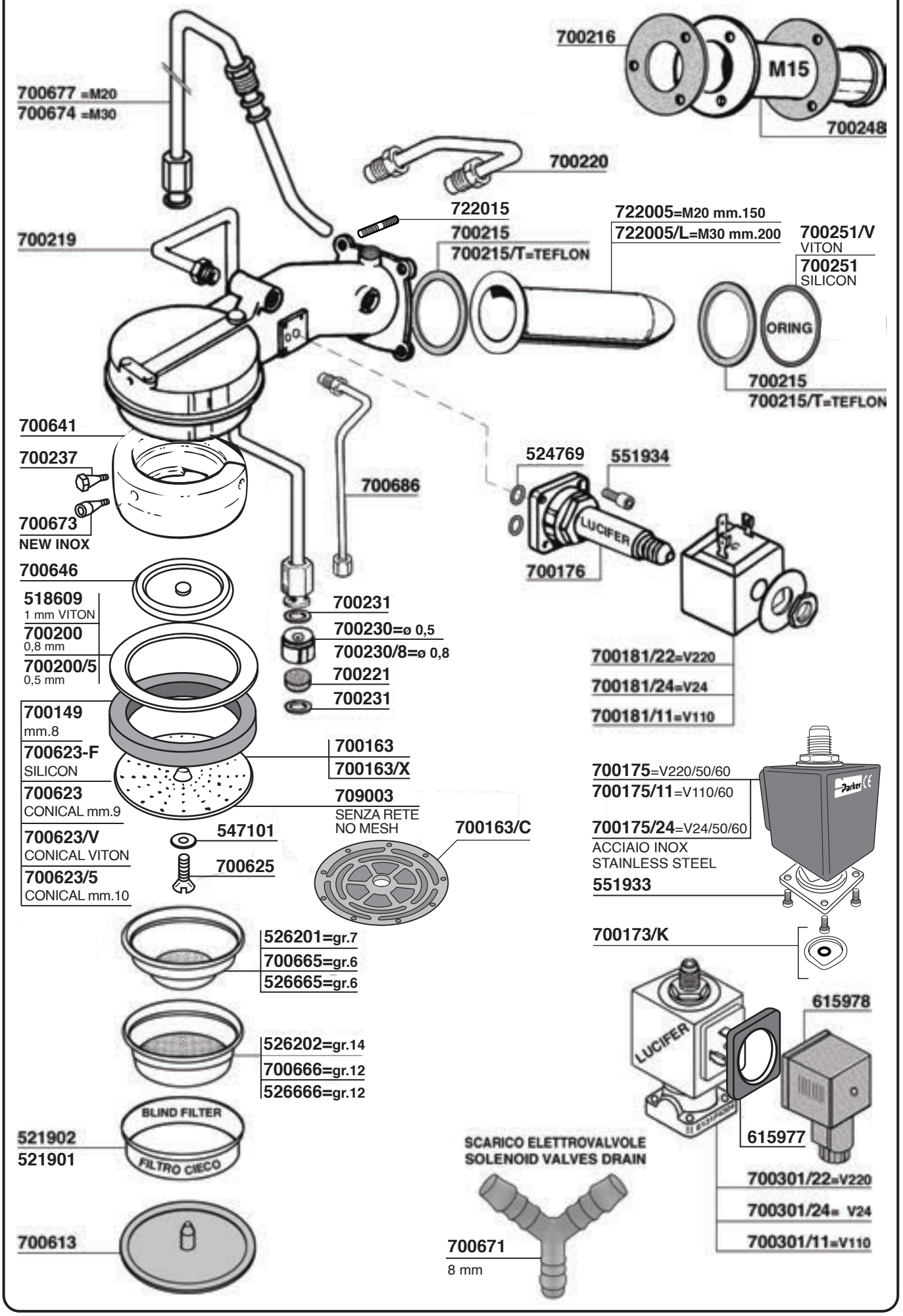

PARTI COMPATIBILI CIMBALI Tav. 02

M27RE

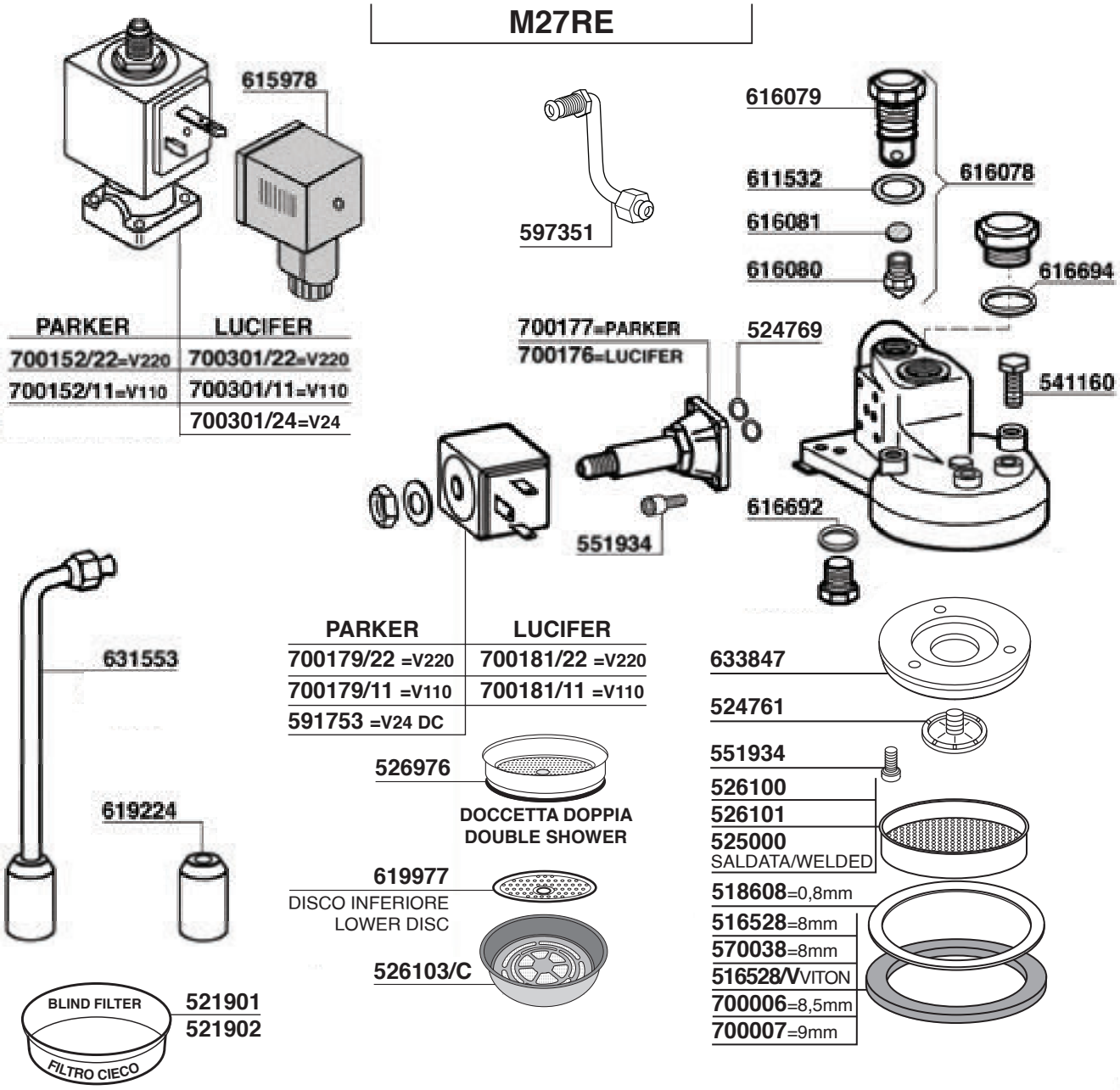

PARKER	LUCIFER
700152/22=V220	700301/22=V220
700152/11=V110	700301/11=V110
	700301/24=V24

PARKER	LUCIFER
700179/22 =V220	700181/22 =V220
700179/11 =V110	700181/11 =V110
591753 =V24 DC	

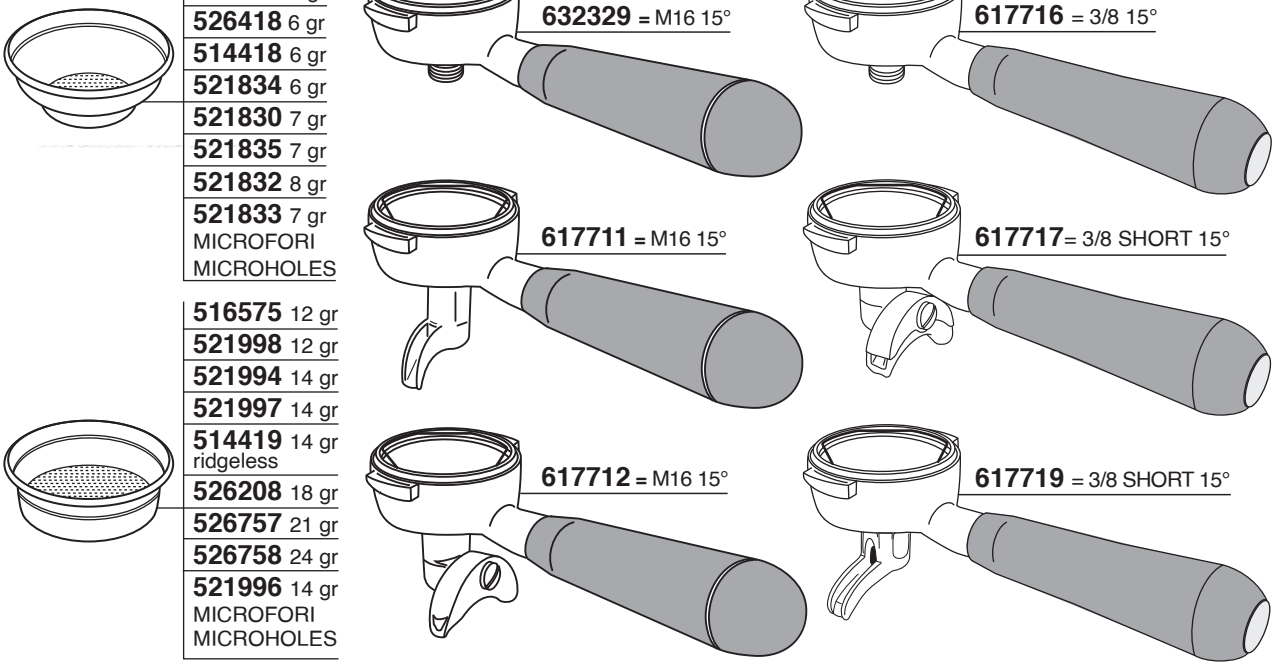

514417 5 gr
526418 6 gr
514418 6 gr
521834 6 gr
521830 7 gr
521835 7 gr
521832 8 gr
521833 7 gr
MICROFORI
MICROHOLES

516575 12 gr
521998 12 gr
521994 14 gr
521997 14 gr
514419 14 gr
ridgeless
526208 18 gr
526757 21 gr
526758 24 gr
521996 14 gr
MICROFORI
MICROHOLES

PARTI COMPATIBILI CIMBALI Tav.03

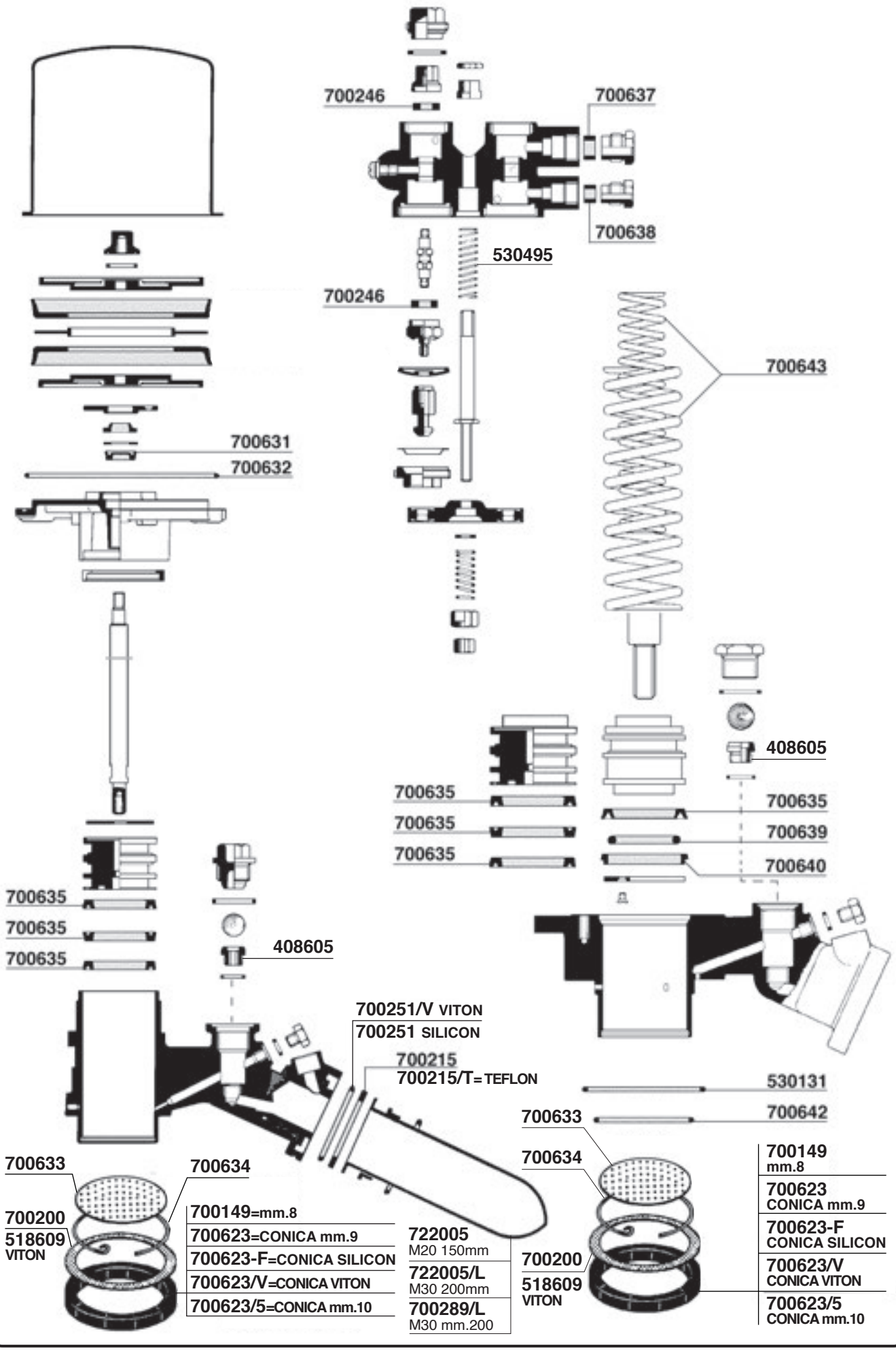

PARTI COMPATIBILI CIMBALI Tav. 04

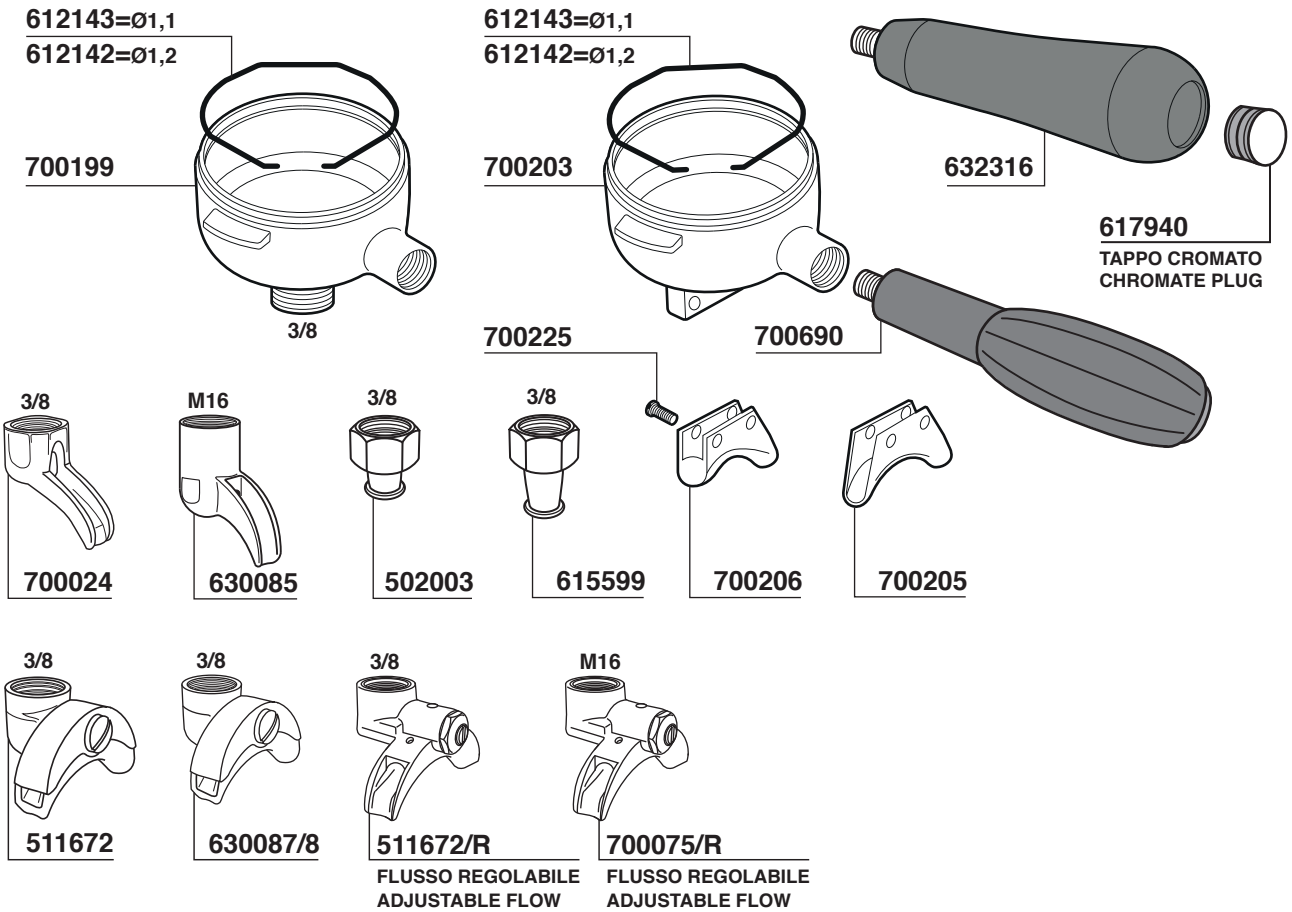

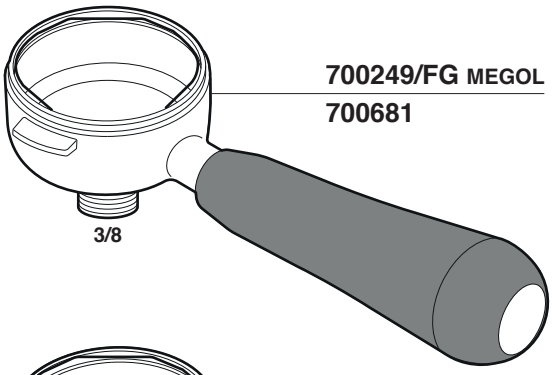

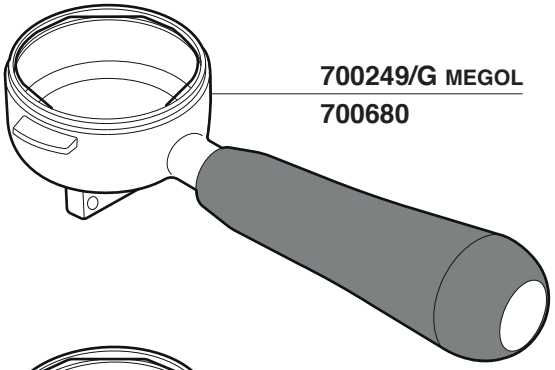

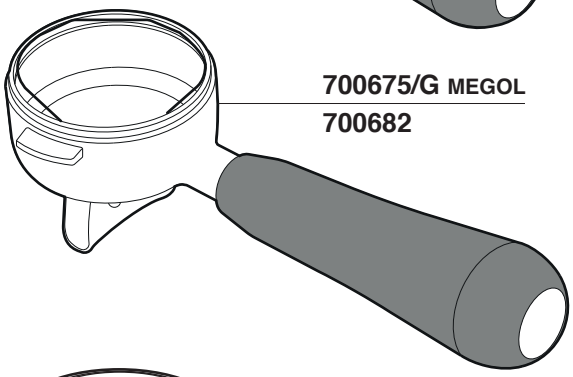

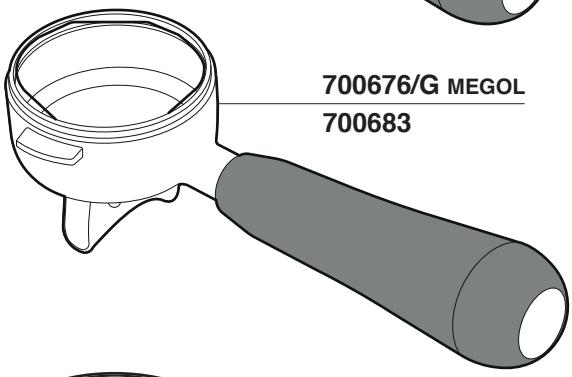

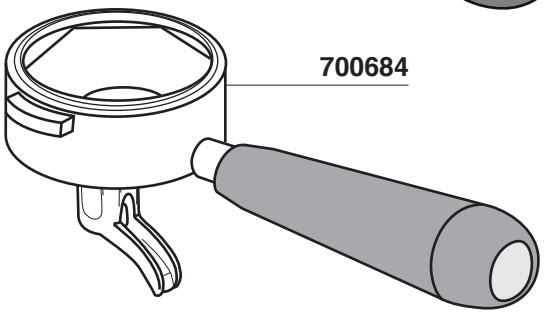

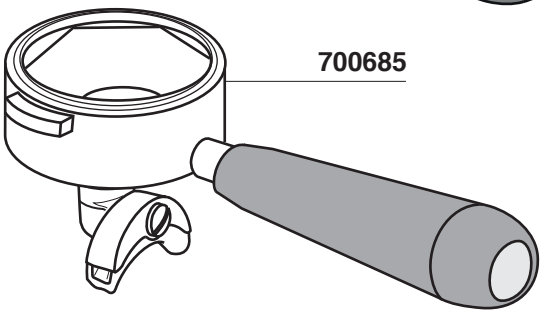

700687

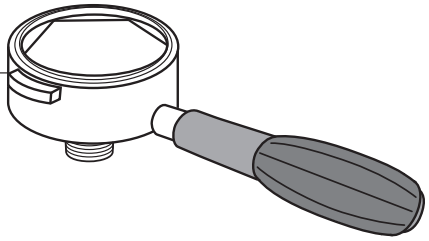

722001

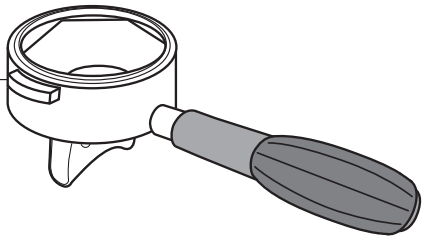

722000

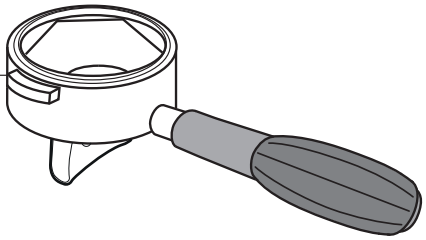

700689

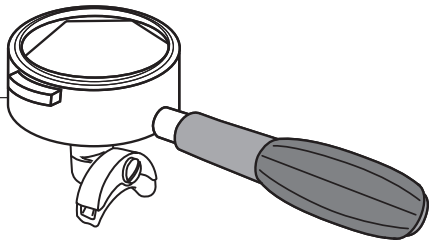

700688

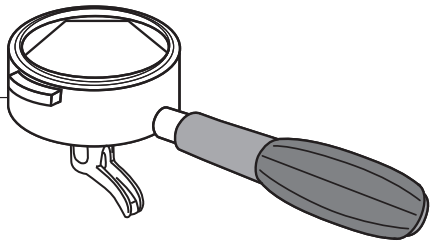

700694

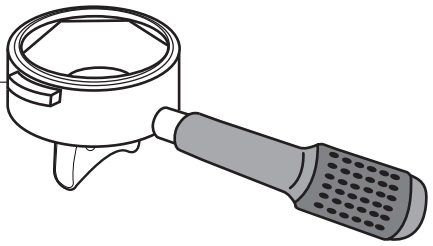

700693

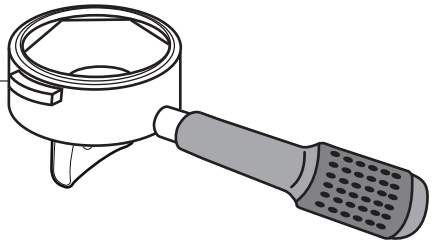

624550/A
ACERO / MAPLE
624550/N
NOCE / WALNUT
624550/U
ULIVO / OLIVE

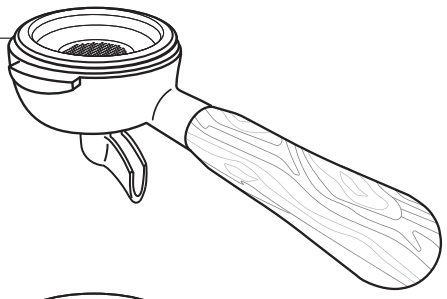

624551/A
ACERO / MAPLE
624551/N
NOCE / WALNUT
624551/U
ULIVO / OLIVE

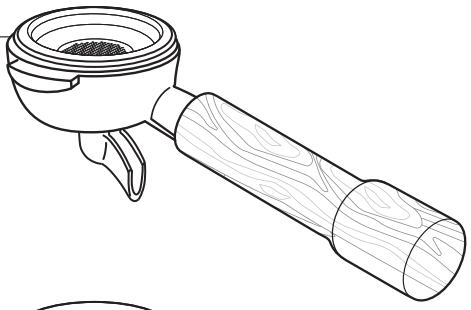

624500/A
ACERO / MAPLE
624500/N
NOCE / WALNUT
624500/U
ULIVO / OLIVE

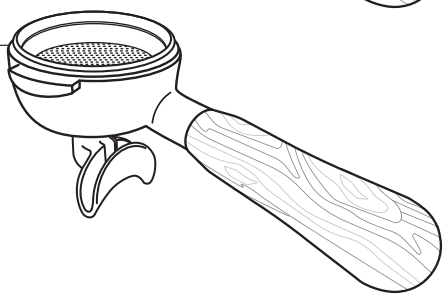

624501/A
ACERO / MAPLE
624501/N
NOCE / WALNUT
624501/U
ULIVO / OLIVE

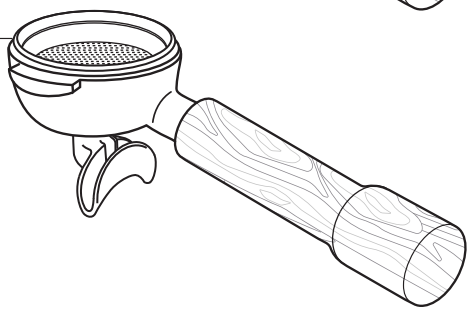

626008/A
ACERO / MAPLE
626008/N
NOCE / WALNUT
626008/U
ULIVO / OLIVE

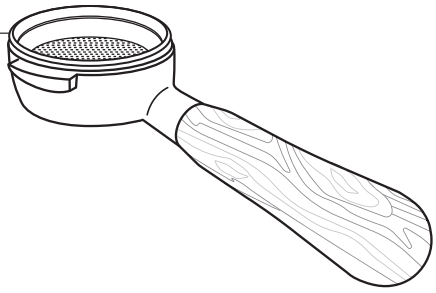

626009/A
ACERO / MAPLE
626009/N
NOCE / WALNUT
626009/U
ULIVO / OLIVE

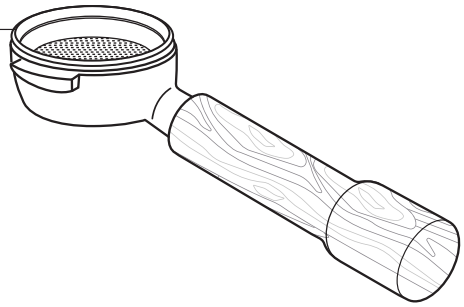

PARTI COMPATIBILI CIMBALI Tav. 06

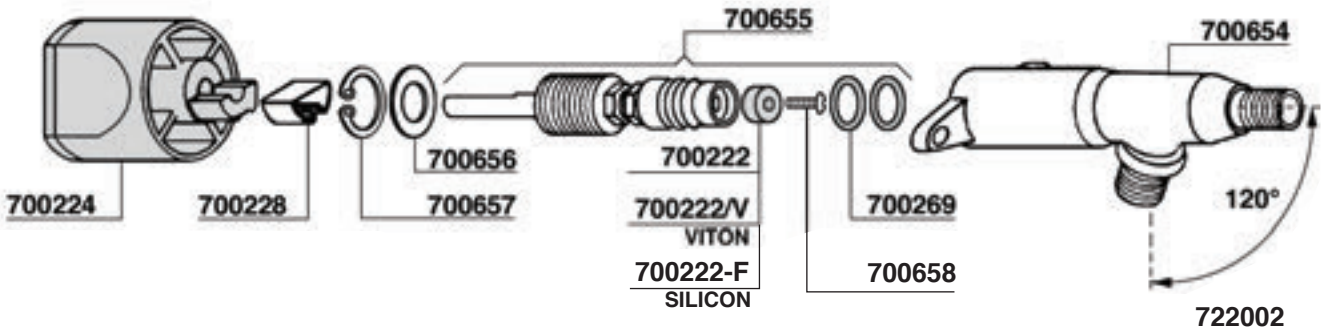

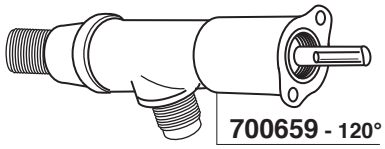

700659 - 120°

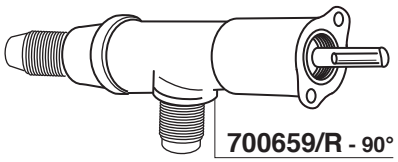

700659/R - 90°

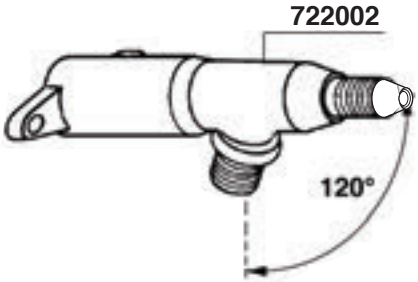

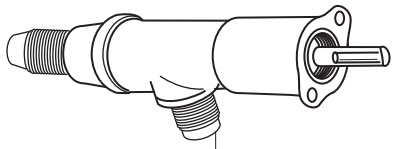

722003 - 120°

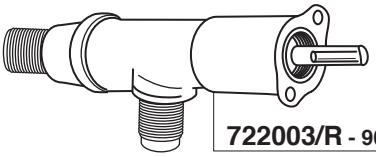

722003/R - 90°

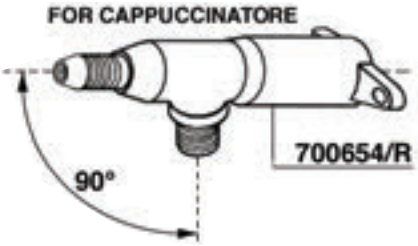

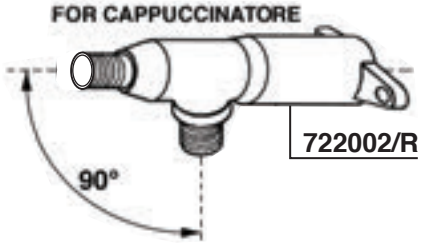

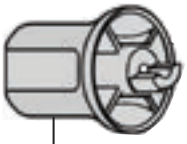

700227

700228

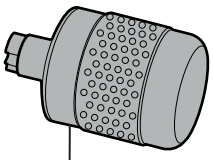

722016
M31-M32

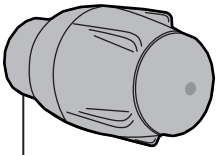

634825 M39-M26-M24
634826 M29-M22
634827 M29-M22

700204

700241

547112

700223

700240

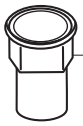

701029

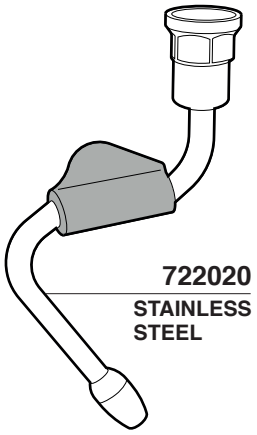

722020
STAINLESS STEEL

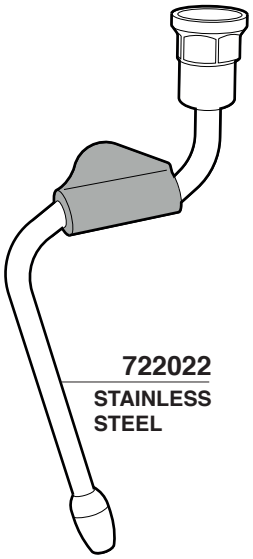

722022
STAINLESS STEEL

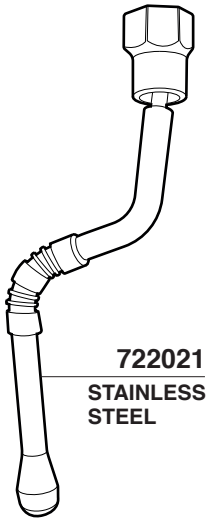

722021
STAINLESS STEEL

700754

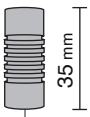

634278

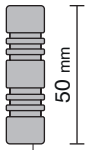

634280

633430 2 HOLES
633433 3 HOLES

633432
O-RING

703472/M 4 HOLES
633429 2 HOLES

401405

700667 =1/8”
700667/10=M10x1

PARTI COMPATIBILI CIMBALI Tav. 07

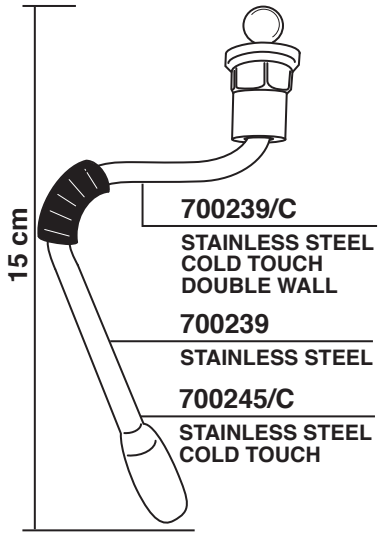

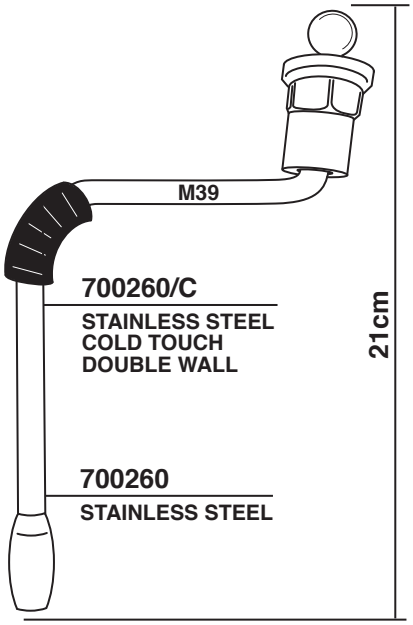

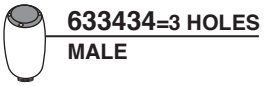
633434=3 HOLES
MALE

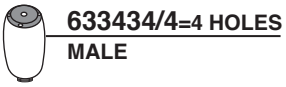
633434/4=4 HOLES
MALE

528874

632348

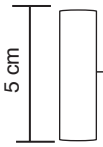

528875
STAINLESS STEEL
EXTENSION

528876
STAINLESS STEEL
EXTENSION

530138
530138/V

528872 2 HOLES

528873 4 HOLES

633433=3 HOLES
FEMALE

633433/4=4 HOLES
FEMALE

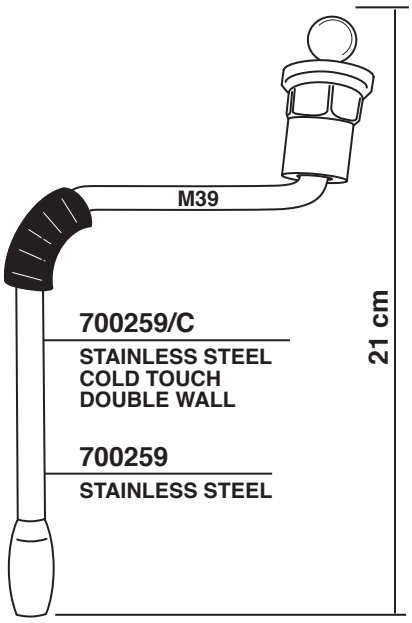

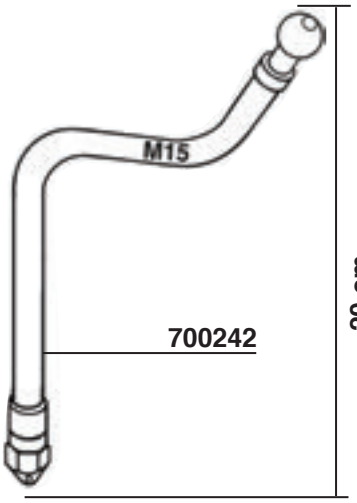

633433=3 HOLES
FEMALE

633433/4=4 HOLES
FEMALE

PARTI COMPATIBILI CIMBALI Tav. 08

700181/22 = V220
700181/11 = V110
700181/24 = V24

BOBINA-COIL

700668 = V220
700668/11 = V110
700668/24 = V24

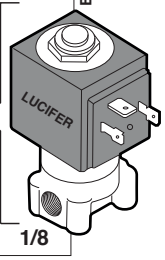

1/8

700670
PARTE MECCANICA
SOLENOID VALVE BODY

632018/22=V220
632018/11=V110
632018/24=V24

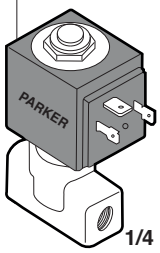

1/4

CAPPUCCINATORE
SCARICO CALDAIA/GRUPPO

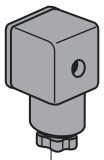

615978

616602/11=V120-110/50-60
616602/22=V230/50
616602/24=V230/50

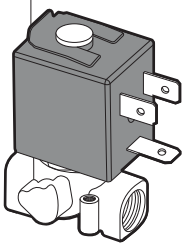

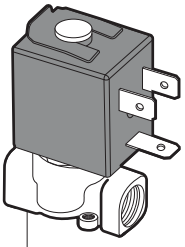

616582
V230/50-60

722017
STIKERS

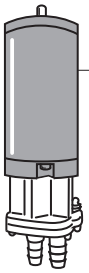

620419
MILK PUMP 24V
FLUID-O-TECH
TYPE M36X30/I

611297

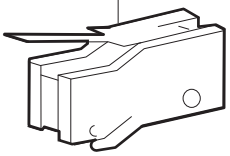

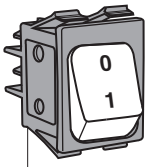

615152/V
GREEN

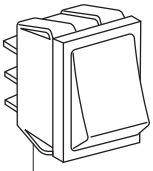

615152
SWITCH
RED

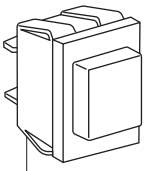

700180
SWITCH

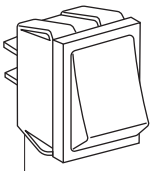

621080
BUTTON
ORANGE

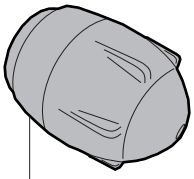

630680
M39

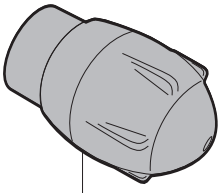

630681
M22-M29

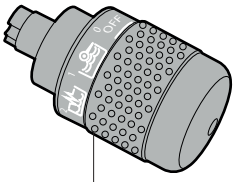

722010
M31-M32

700238

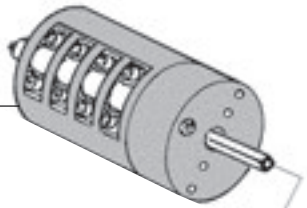

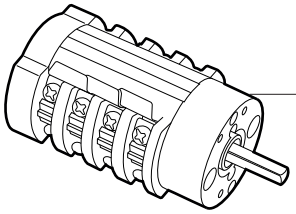

722023

700235
700234
M20

700624

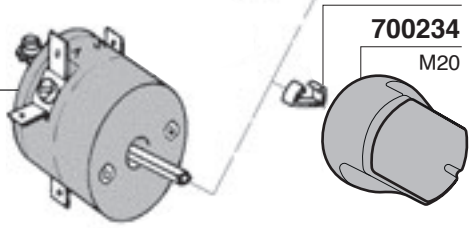

PARTI COMPATIBILI CIMBALI Tav. 09

PUMP M32

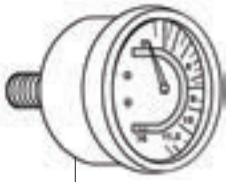

700678

BOILER M32

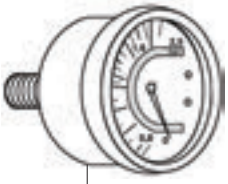

700679

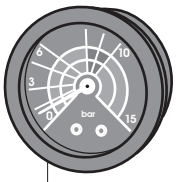

700620
PUMP

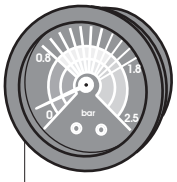

700619
BOILER

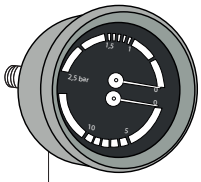

700874
DOPPIA SCALA
TWO SCALES

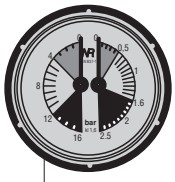

602001
DOPPIA SCALA
TWO SCALES

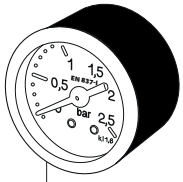

632493
M39

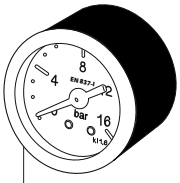

632494
M39

700653/22=V220/50 M30 CLASSIC
700653/12=V12 DC M30-DOSATRON
700653/24=V24 DC

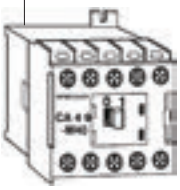

615978/T

615979

530148

617903/G

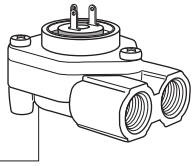

620405
1/4" UL-NSF METAL

617902

615978/T

615979

530148

617903

551937

700621

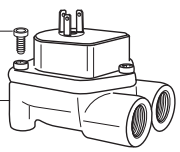

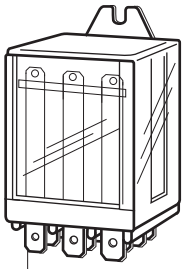

700652/22=V220
700652/24=V24
700652/12=V12 DC BISTRO

570047
QUINDICI

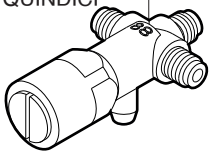

722014

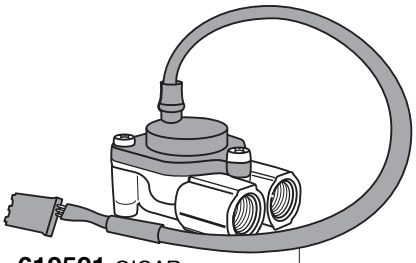

619591 GICAR
619595 DIGMESA

722011

722019

700244

700428

722012

700645
TEFLON

722013

700246

530137

700661

700644
VITON

700645
TEFLON

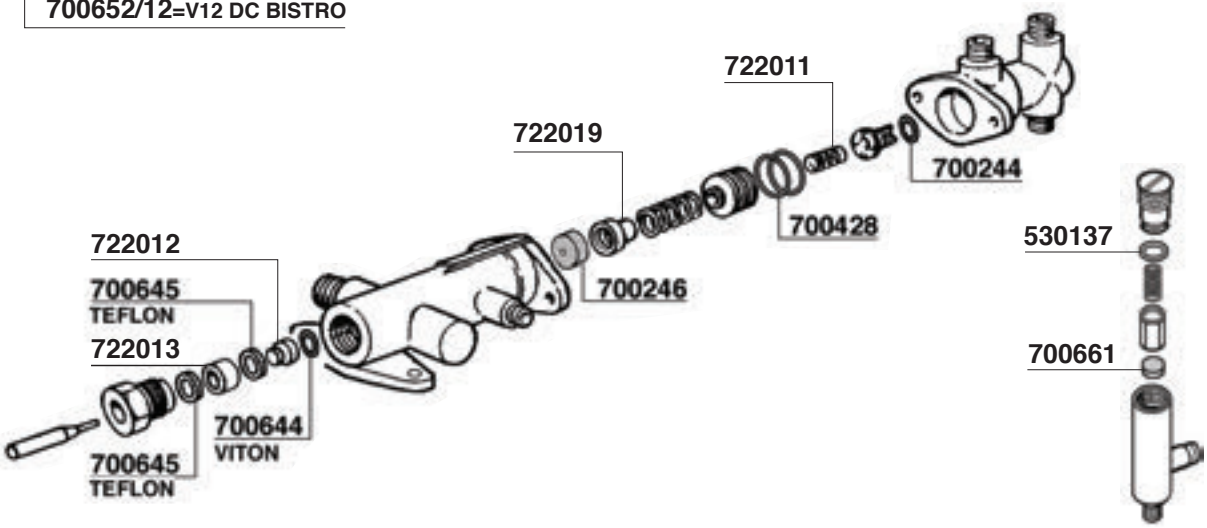

PARTI COMPATIBILI CIMBALI Tav. 10

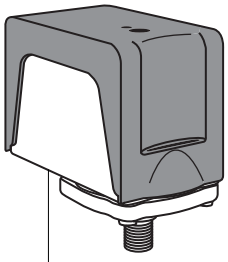

616597 CE/UL

700210=GR/1 W1700 V220/380
700212=GR/3 W5790 V220/380
700209=GR/2 W3750 V220/380
700213=ALINA W2850 V220/380

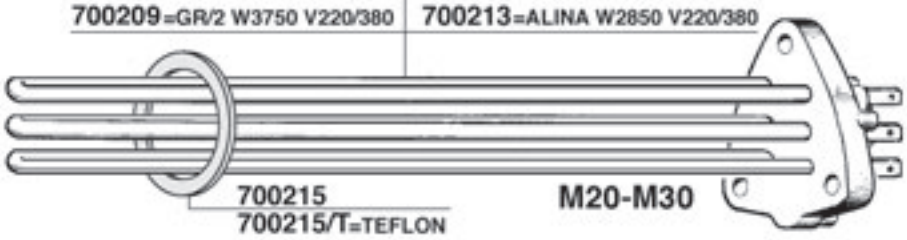

700215
700215/T=TEFLON
M20-M30

700662

703237
169°

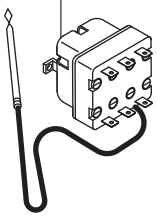

700214

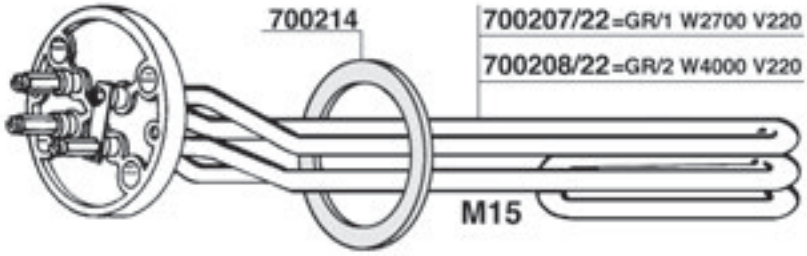

700207/22=GR/1 W2700 V220
700208/22=GR/2 W4000 V220
M15

700215
700215/T=TEFLON

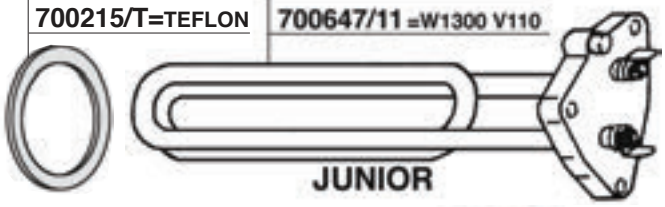

700647/22=W1300 V220
700647/11=W1300 V110
JUNIOR

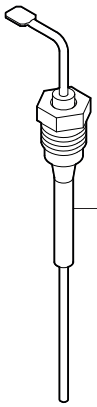

570036

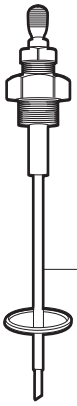

722007
1/8

612601
120mm

612601/L
140mm

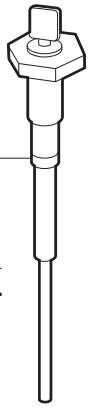

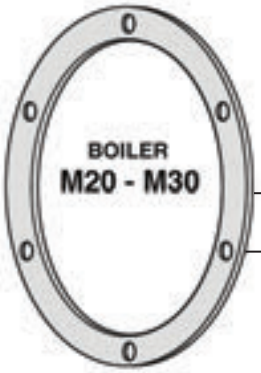

BOILER
M20 - M30

700252
700252/T
TEFLON

700229

700229/T
TEFLON

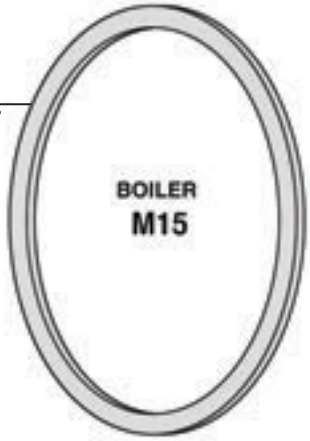

BOILER
M15

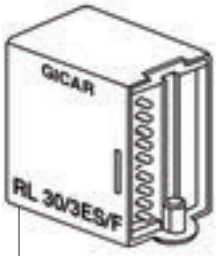

GICAR
RL 30/3ES/F

700852=V220
GICAR CODE 9.1.19.80G

700852/11=V110
GICAR CODE 9.1.19.79G

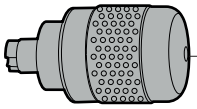

722009
GAS
M31-M32

530139

602000
TRASDUTTORE PRESSIONE
PRESSURE SENSOR

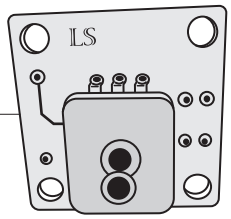

MAGNETE

700762

GALLEGGIANTE

700669/S

700651

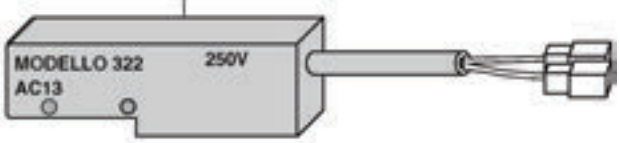

NST00185

N1972

PARTI COMPATIBILI CIMBALI Tav. 11

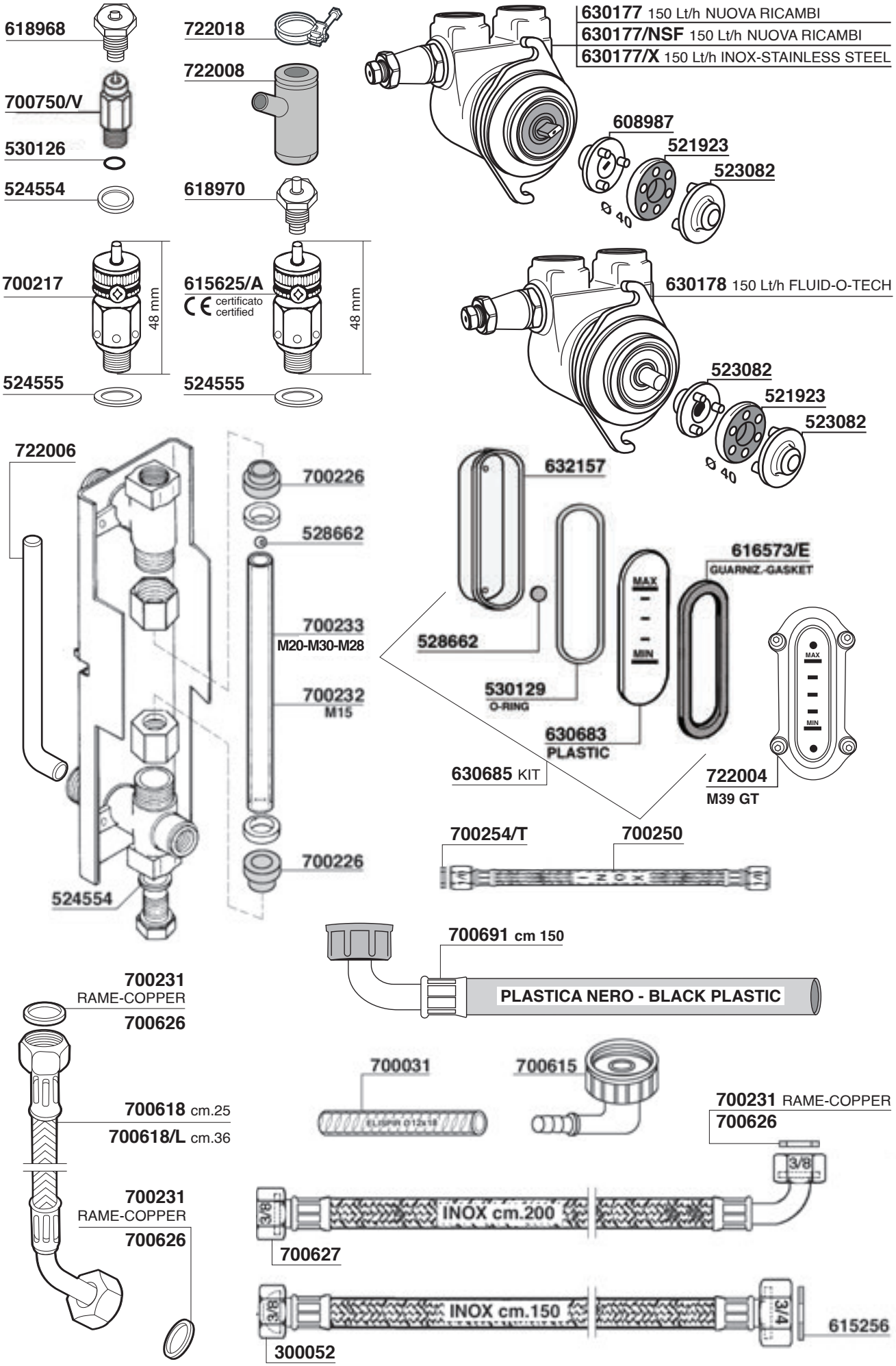

PARTI COMPATIBILI CIMBALI Tav. 12

591540
M27/2008

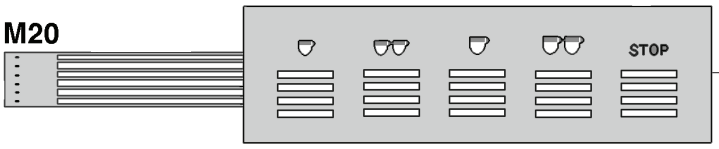

700649

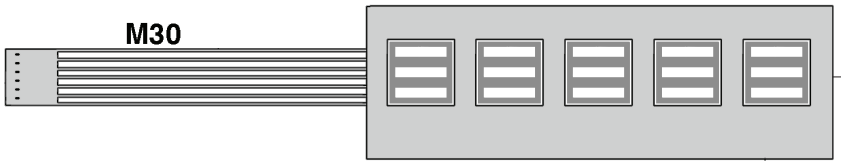

700650

591541
M21 JUNIOR - M22

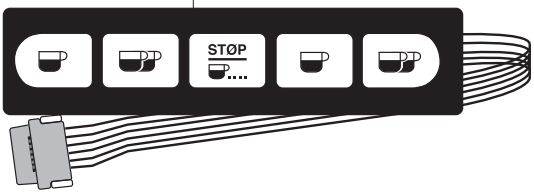

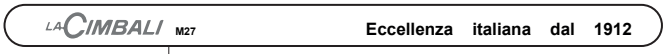

591551
M27

619006
M27

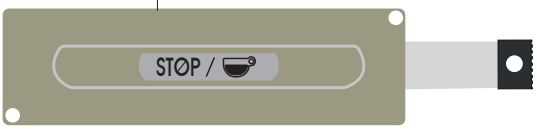

591542
M32

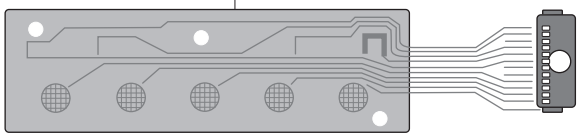

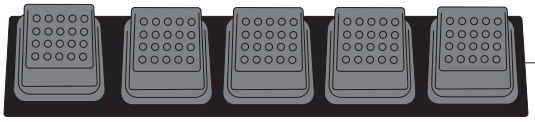

591543
M32 DOSATRON

700608
M39 - M39GT

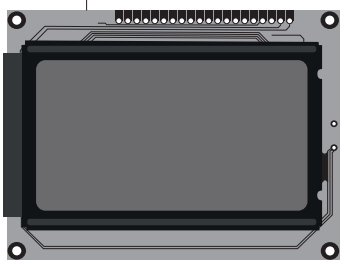

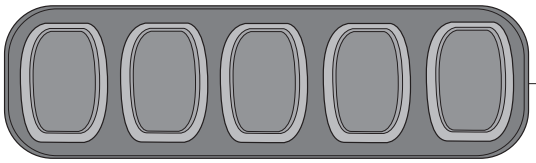

591544
M39

570037
M27 RE

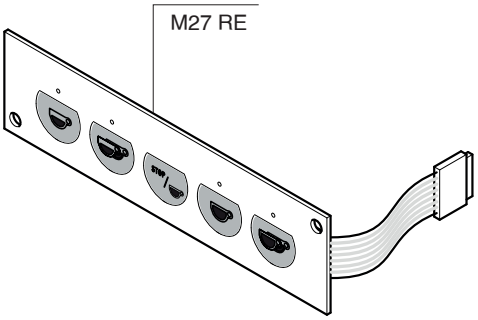

591552
SEMIAUTOMATIC
M24

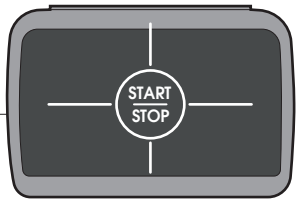

591553
AUTOMATIC
M24

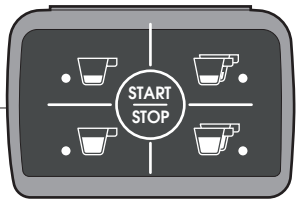

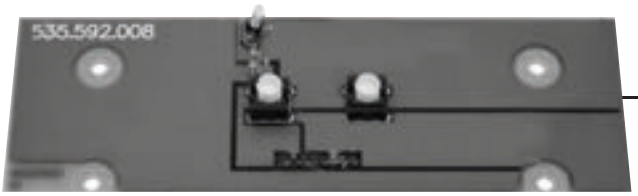

591545
M39 GT CLASS

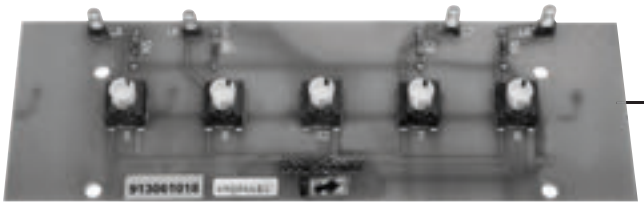

591546
M39 DOSATRON R - M39 GT

591547
M39 CLASSIC

591548
M39 DOSATRON

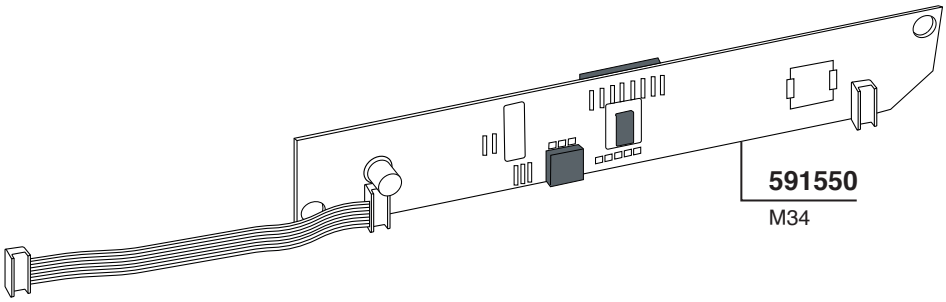

591550
M34

SCHEDA ELETTRONICA UNIFICATA
UNIFIED ELECTRONIC CARD

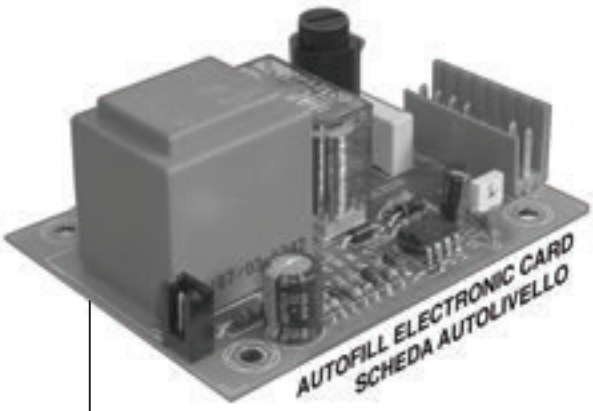

591000
V220 M27

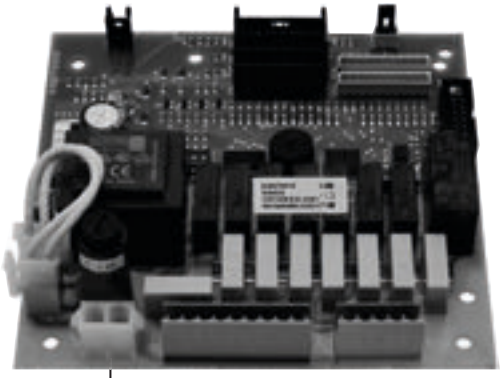

591549
M22-M24-M27/2007-M29-M39

CIME

Tav. 01

QUADRA - CO.05

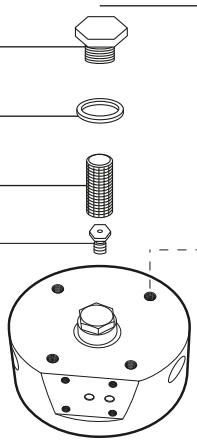

505005 3/8 M

703008

700805

524467

529574

505004

403182

505036

700163

700163/X

552349

601513	220V	GHEZ
300304	220V	ODE
300304/11	110V	
700301/22	220V	LUCIFER
700301/11	110V	
700152/22	220V	PARKER
700152/11	110V	

300015	220V	ODE
300015/11	110V	
700181/22	V220	LUCIFER
700181/11	V110	
700179/22	V220	PARKER
700179/11	V110	

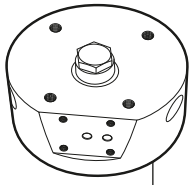

505037
COMPLETE GROUP

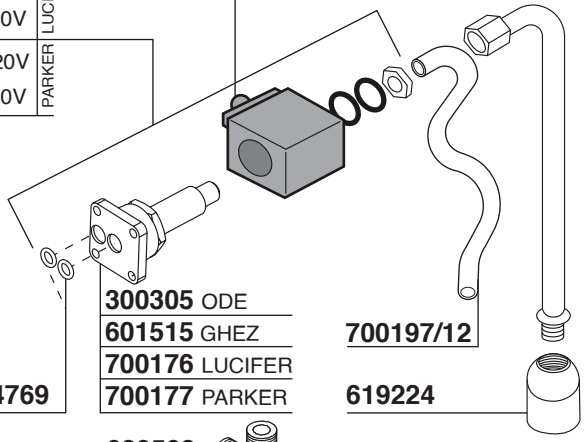

300305 ODE
601515 GHEZ
700176 LUCIFER
700177 PARKER

524769

700197/12

619224

620563
1/4M

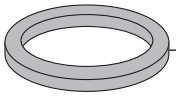

700883 =mm.8
516528/N =mm.8
505007=mm.8 ORIGINAL
700883/V= VITON
700883/5=mm.8,5
505006=mm.8,5 ORIGINAL
700883/5-F= SILICON
700883/80=mm.8,5

612143 Ø1,1 mm
612142 Ø1,2 mm

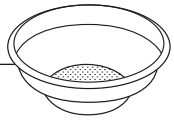

514417 5gr
514418 6gr
526418 6gr
521834 6gr
521830 7gr
521835 7gr
521832 8gr
521833 7gr
MICROFORI
MICROHOLES

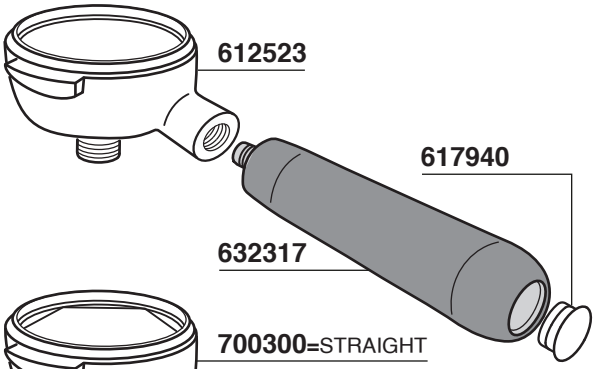

612523

617940

632317

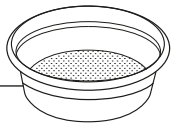

516575 12gr
521998 12gr
521994 14gr
521997 14gr
514419 14gr
ridgeless
526208 18gr
526757 21gr
300059 21gr
526758 24gr
521996 14gr
MICROFORI
MICROHOLES

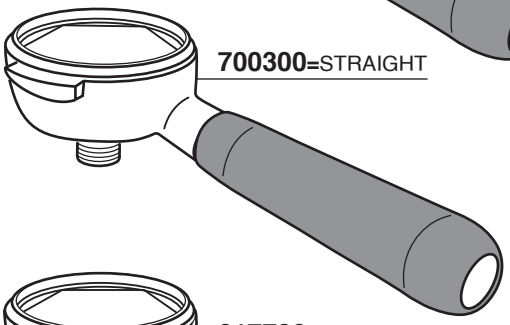

700300=STRAIGHT

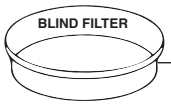

521901
521902

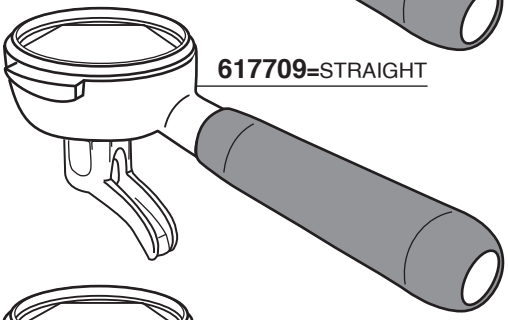

617709=STRAIGHT

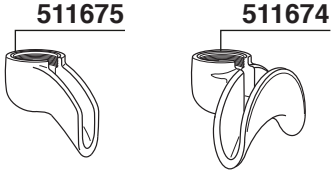

511675

511674

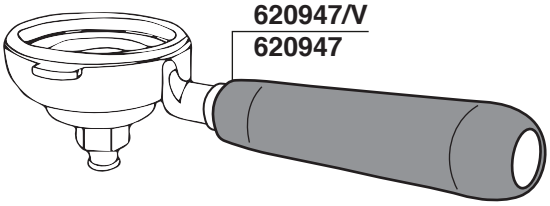

620947/V
620947

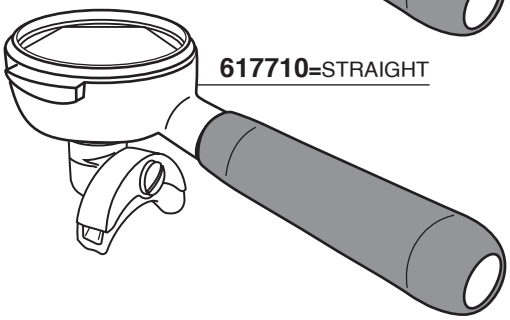

617710=STRAIGHT

CIME

Tav. 02

CO.05

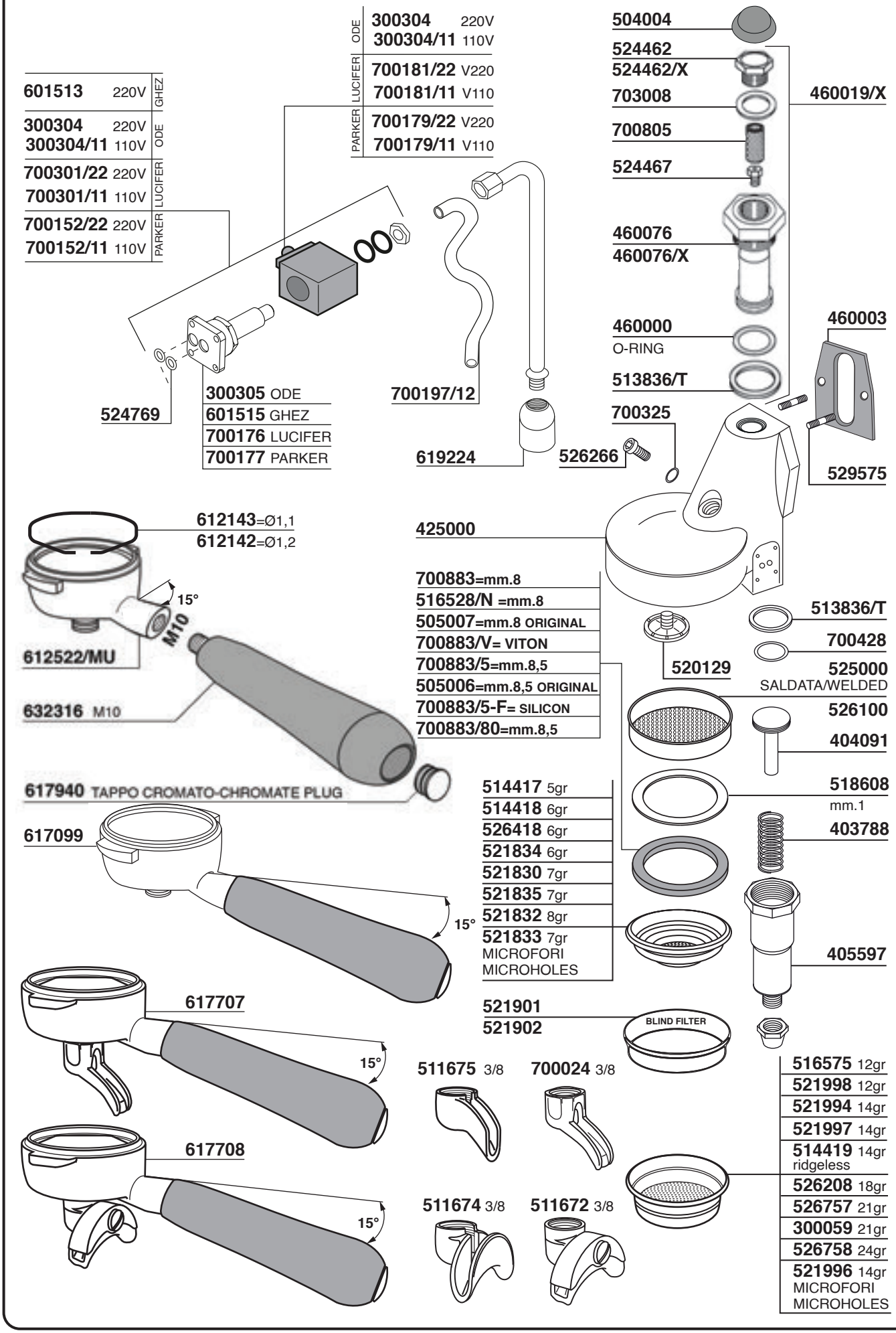

CIME

Tav.03

QUADRA

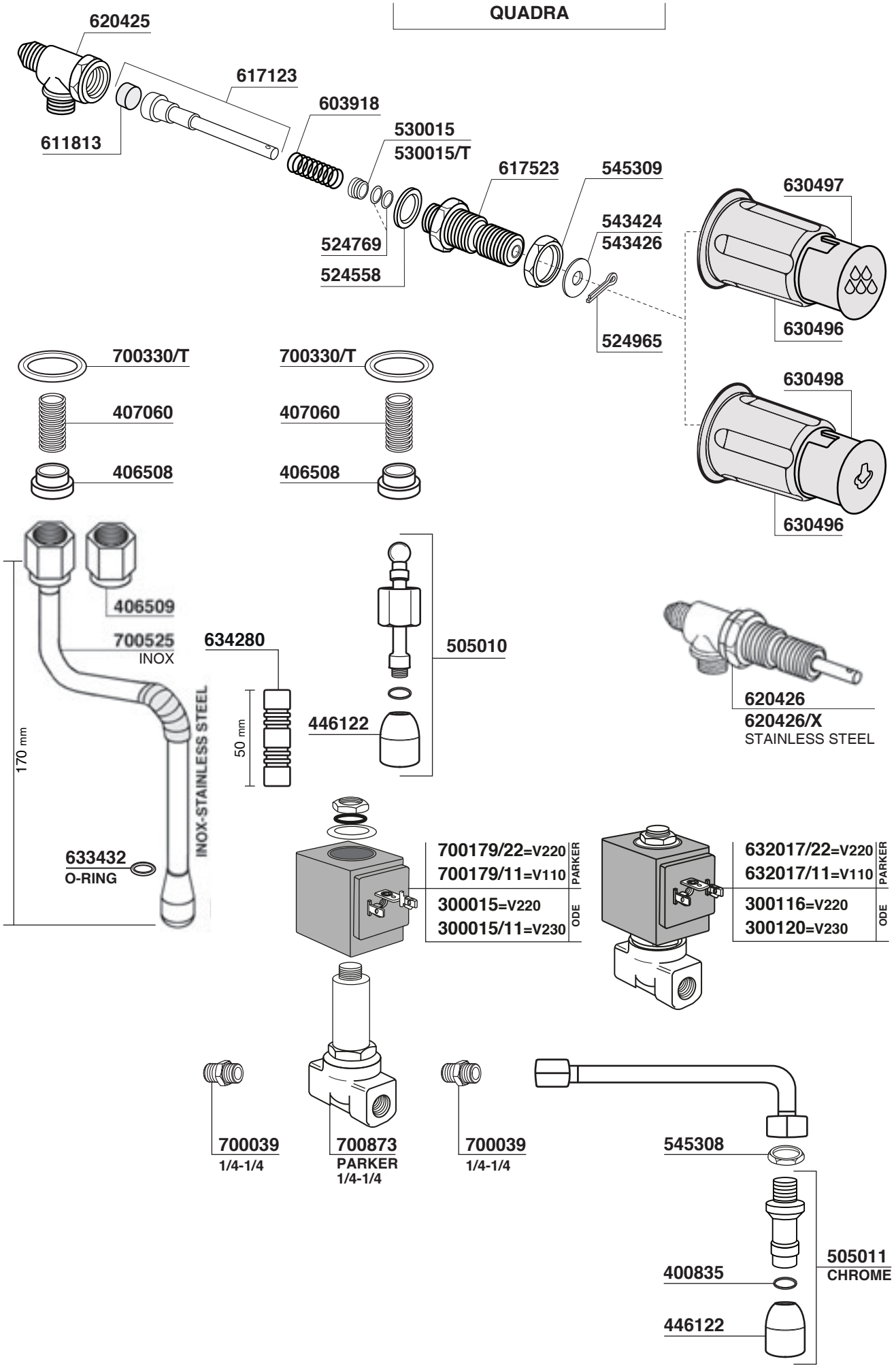

CO.05

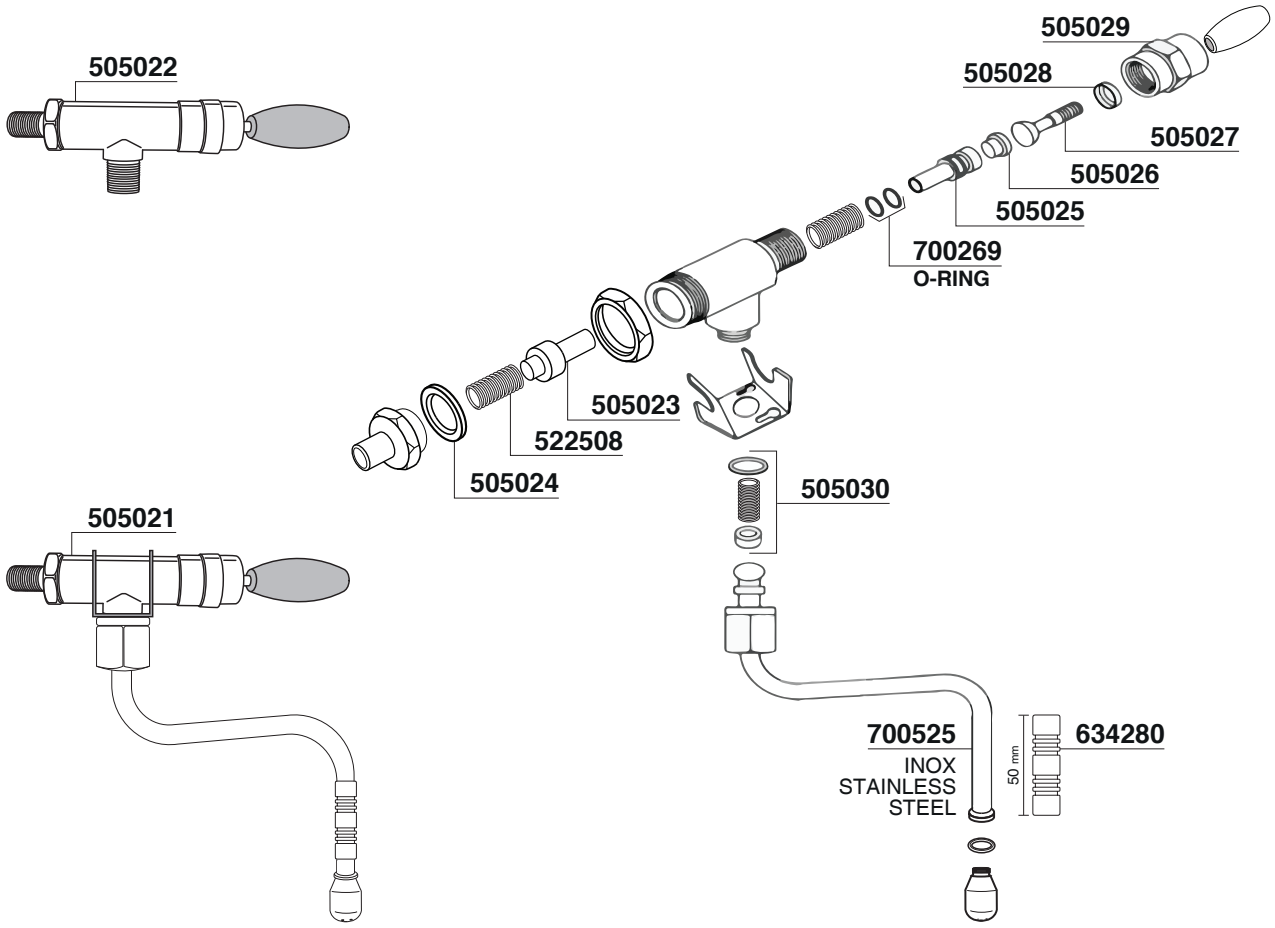
505022
505029
505028
505027
505026
505025
700269
O-RING
505023
522508
505024
505030
505021
700525
INOX
STAINLESS
STEEL
50 mm
634280

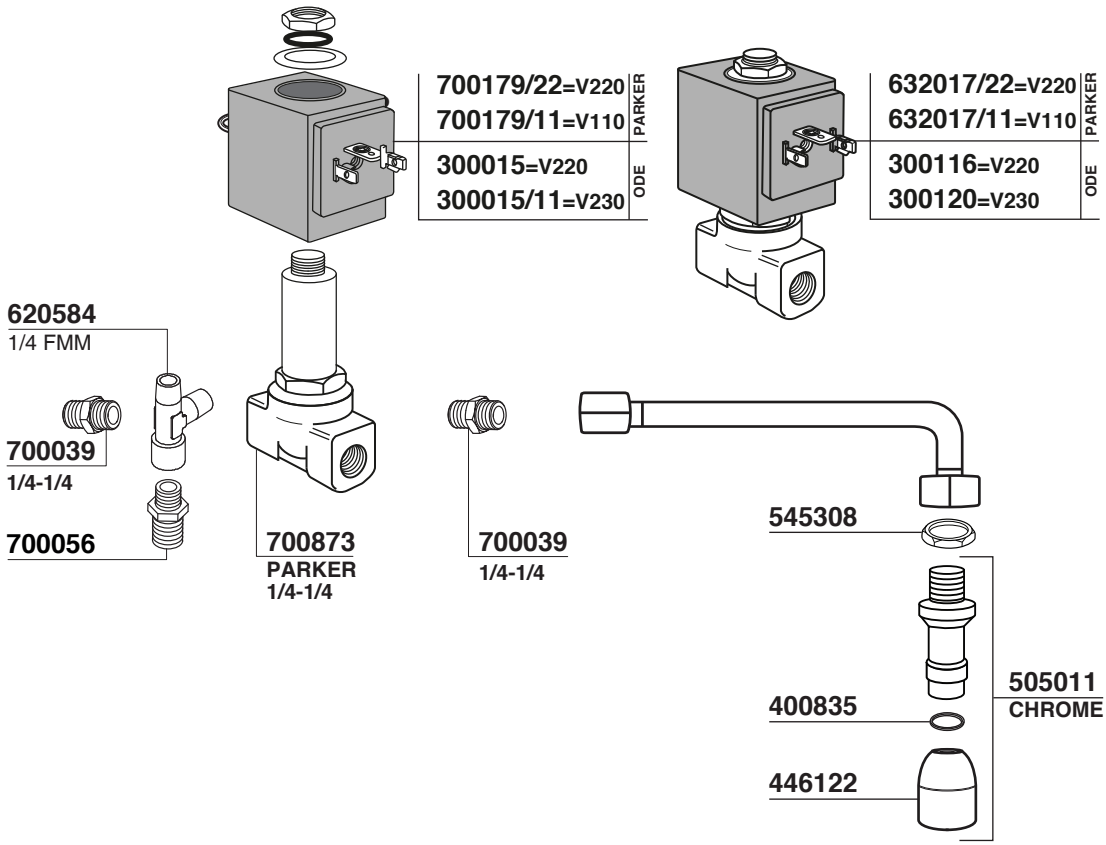
700179/22=V220
700179/11=V110
PARKER
300015=V220
300015/11=V230
ODE
632017/22=V220
632017/11=V110
PARKER
300116=V220
300120=V230
ODE
620584
1/4 FMM
700039
1/4-1/4
700056
700873
PARKER
1/4-1/4
700039
1/4-1/4
545308
505011
CHROME
400835
446122

CIME

QUADRA - CO.05

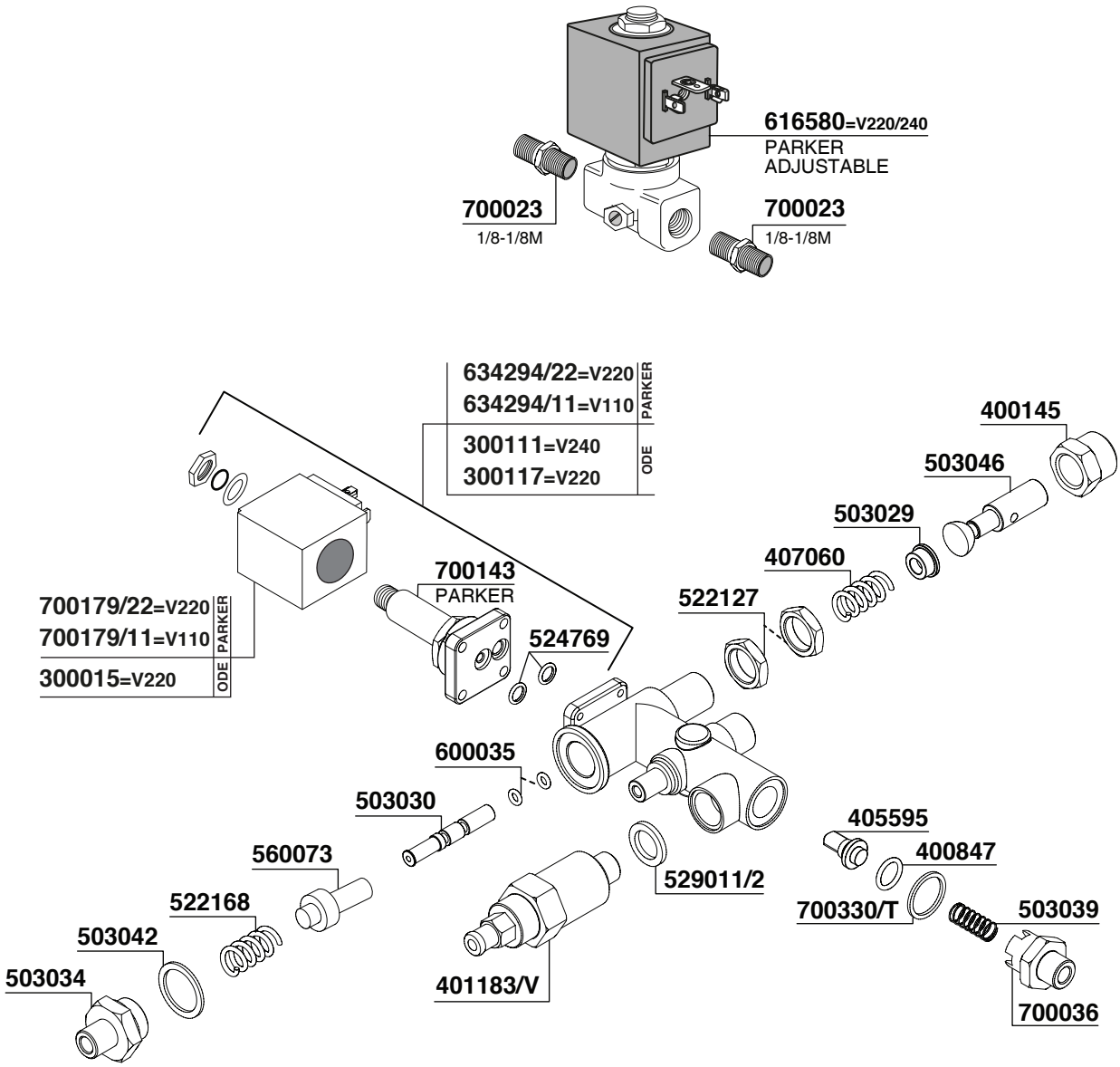

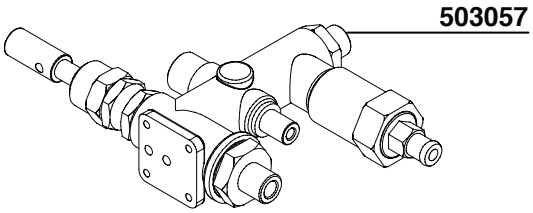

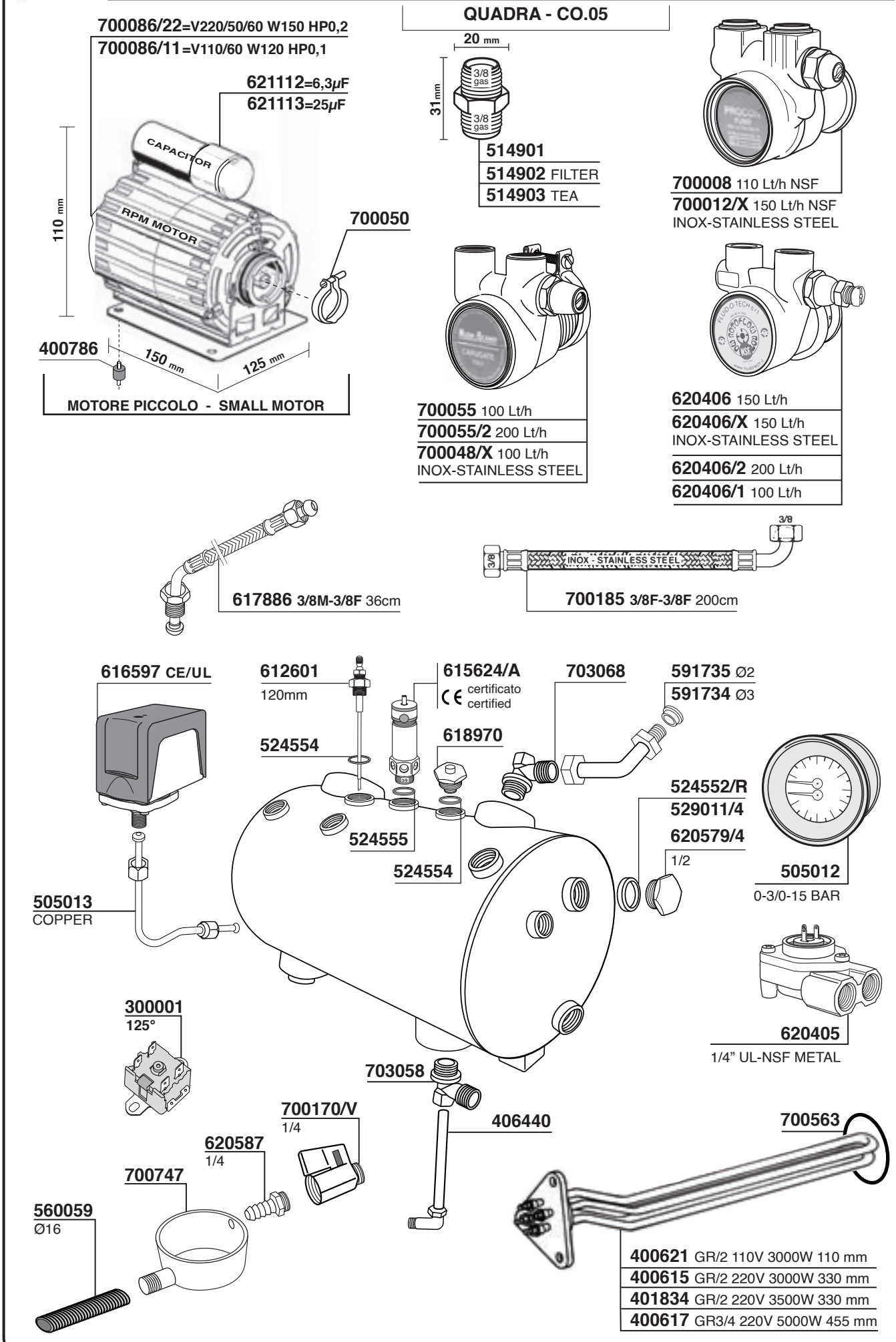
700086/22=V220/50/60 W150 HP0,2
700086/11=V110/60 W120 HP0,1
621112=6,3μF
621113=25μF
CAPACITOR
RPM MOTOR
110 mm
700050
400786
150 mm
125 mm
MOTORE PICCOLO - SMALL MOTOR
QUADRA - CO.05
20 mm
31 mm
3/8 gas
3/8 gas
514901
514902 FILTER
514903 TEA
700008 110 Lt/h NSF
700012/X 150 Lt/h NSF
INOX-STAINLESS STEEL
700055 100 Lt/h
700055/2 200 Lt/h
700048/X 100 Lt/h
INOX-STAINLESS STEEL
620406 150 Lt/h
620406/X 150 Lt/h
INOX-STAINLESS STEEL
620406/2 200 Lt/h
620406/1 100 Lt/h
617886 3/8M-3/8F 36cm
3/8
INOX - STAINLESS STEEL
700185 3/8F-3/8F 200cm
616597 CE/UL
612601
120mm
615624/A
certificato
certified
703068
591735 Ø2
591734 Ø3
524554
618970
524552/R
529011/4
620579/4
1/2
524555
524554
505012
0-3/0-15 BAR
505013
COPPER
620405
1/4" UL-NSF METAL
300001
125°
703058
700170/V
1/4
406440
700563
620587
1/4
700747
560059
Ø16
400621 GR/2 110V 3000W 110 mm
400615 GR/2 220V 3000W 330 mm
401834 GR/2 220V 3500W 330 mm
400617 GR3/4 220V 5000W 455 mm

CIME

QUADRA - CO.05

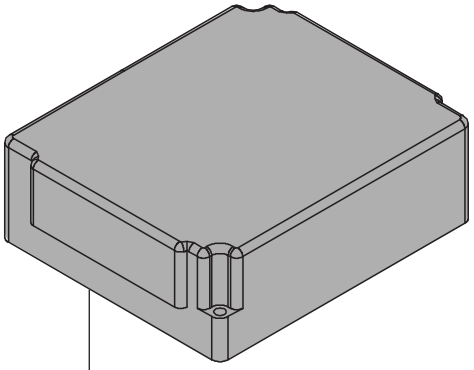

505014 1-2-3GR 230V
GICAR CODE 9.5.22.68G 08
505015 1-2-3GR 115V
GICAR CODE 9.5.22.74G 04

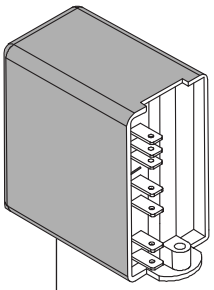

505020 230/240V
GICAR CODE 9.1.41.30G 00
QUADRA

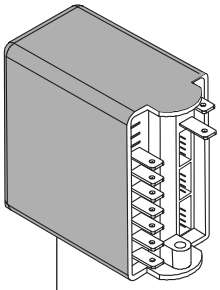

505031 230/240V
GICAR CODE 9.9.37.93G
CO.05

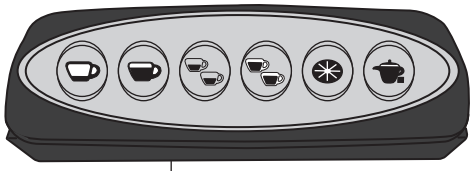

505016 ORIGINAL
GICAR CODE 9.9.07.56G

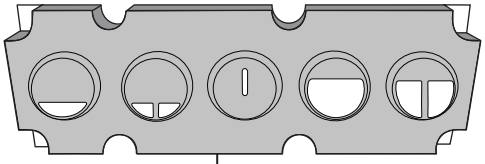

505033

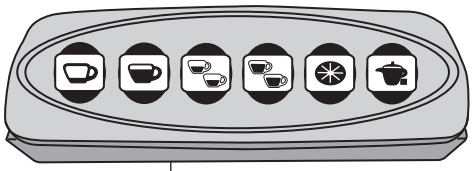

620734
GICAR CODE 9.9.07.41G

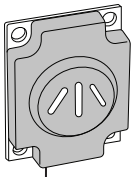

505032

505035

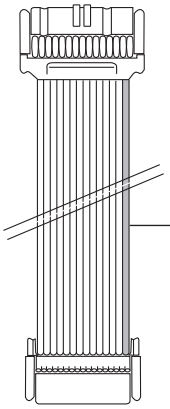

620706 600mm. 16PIN
620707 800mm. 16PIN
505019 1100mm. 16PIN

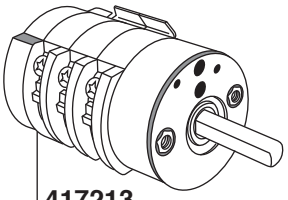

417213
20A 0-1-2

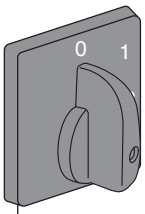

417214

ROSSO
RED

505017

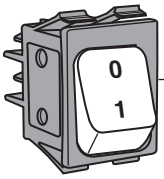

700382
ORANGE

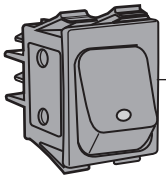

579671
BLACK

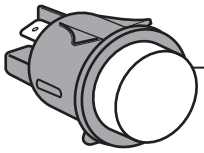

618010 RED

VERDE
GREEN

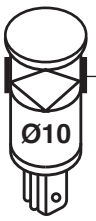

505018

COFFEE QUEEN

Tav. 01

M - 2

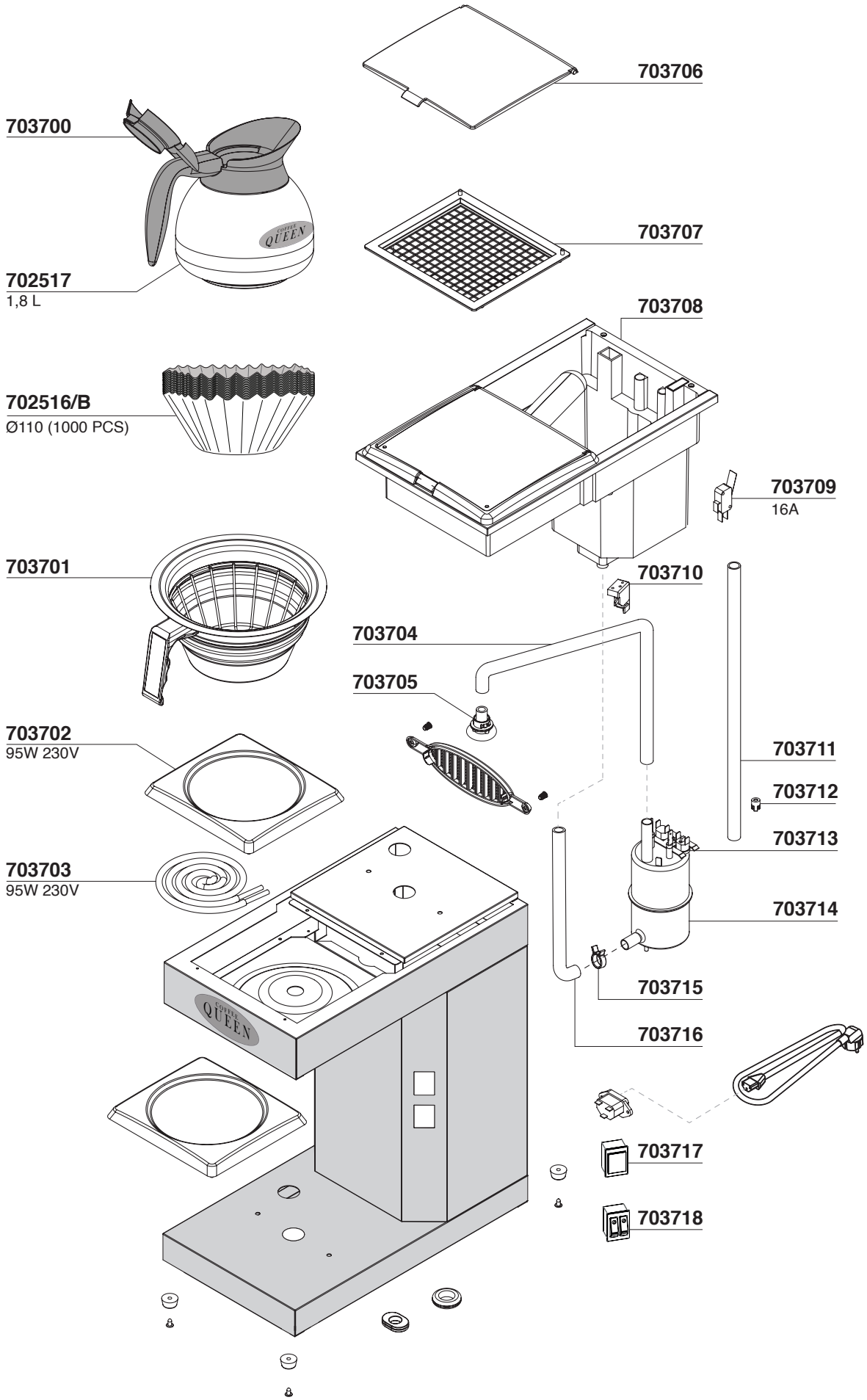

CREM

Tav. 02

M- 2 TK

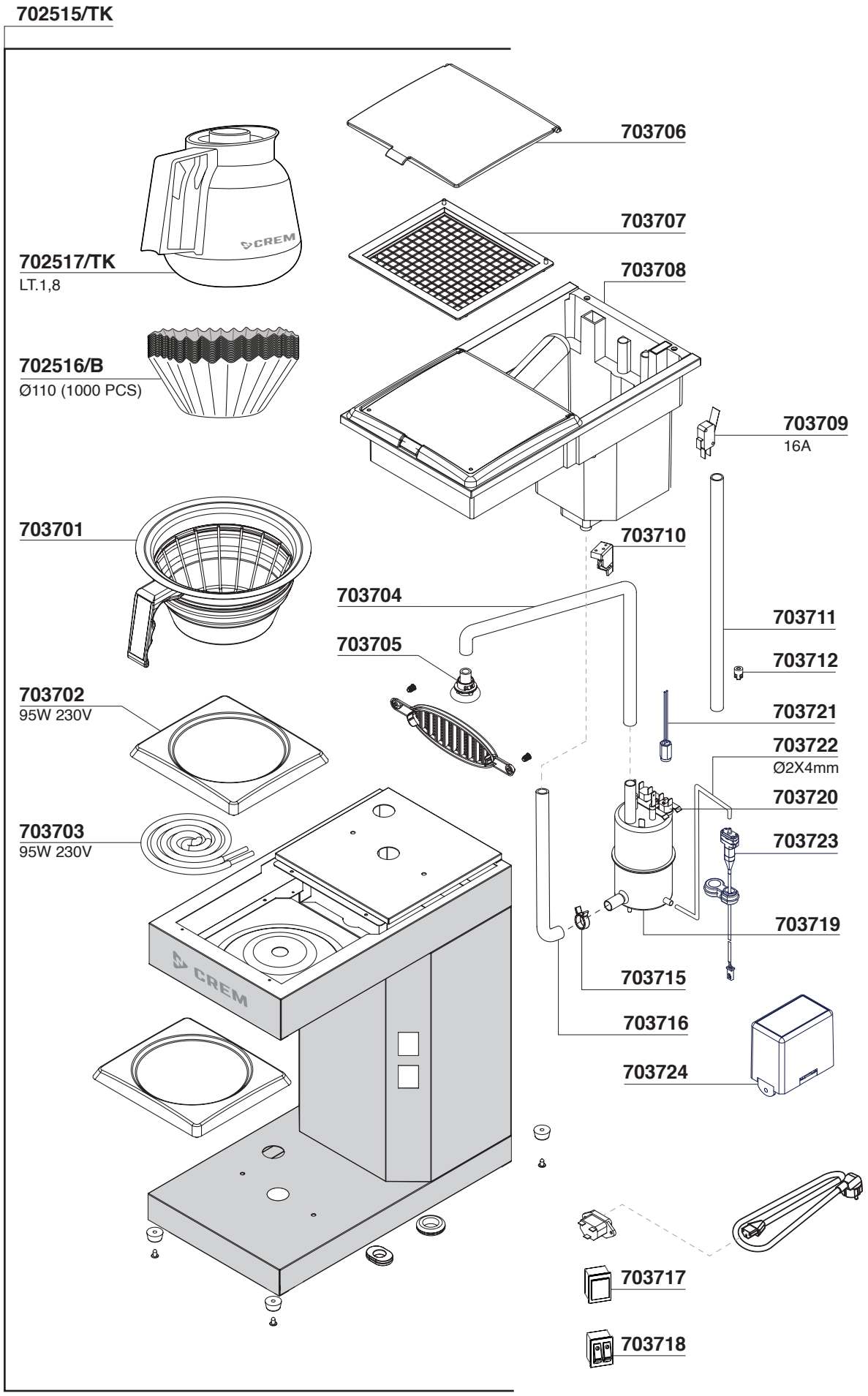

CONTI

Tav. 01

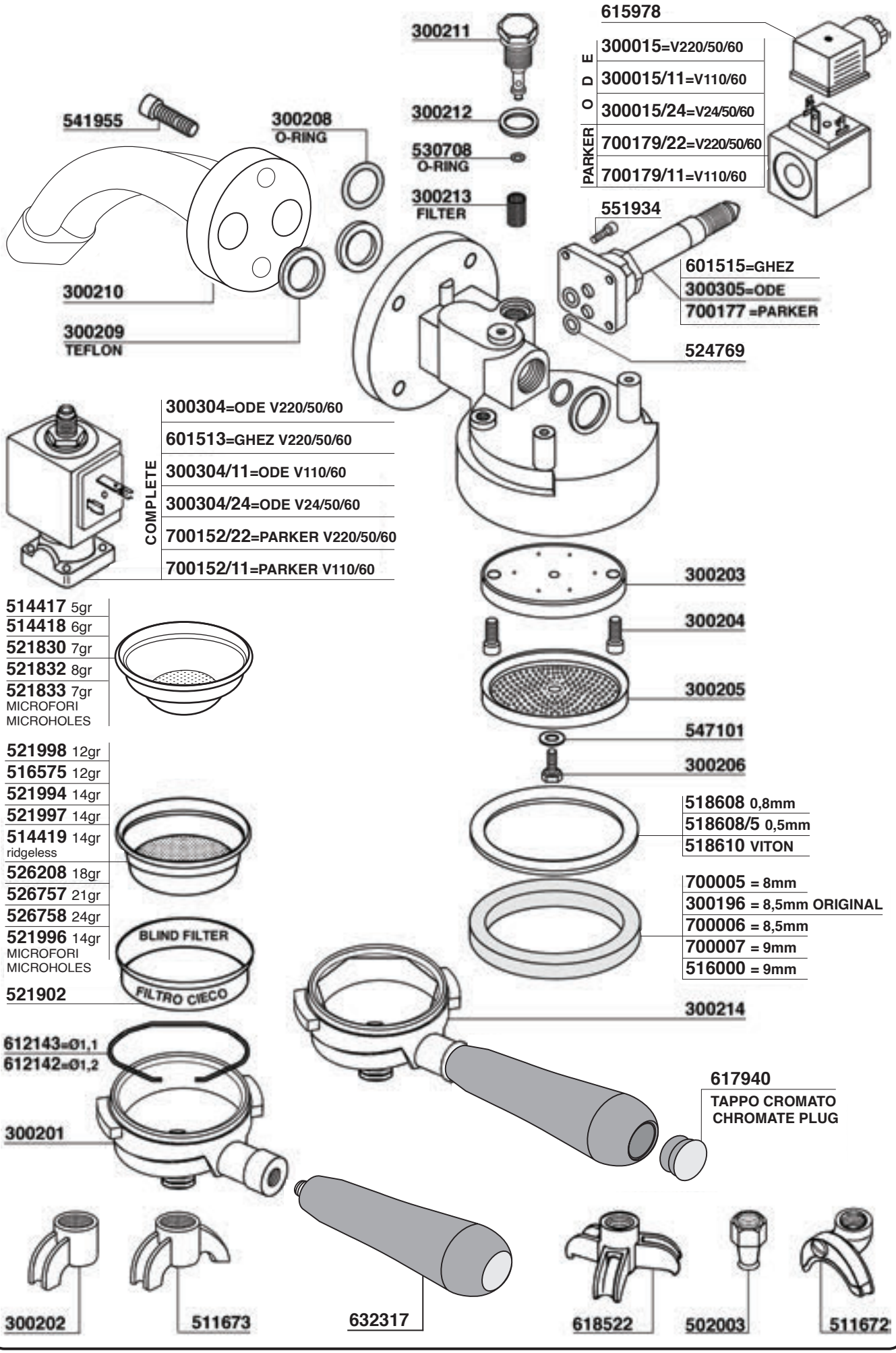
615978
300015=V220/50/60
300015/11=V110/60
300015/24=V24/50/60
700179/22=V220/50/60
700179/11=V110/60
ODE
PARKER
300211
300212
530708
O-RING
300213
FILTER
541955
300208
O-RING
300210
300209
TEFLON
551934
601515=GHEZ
300305=ODE
700177 =PARKER
524769
300304=ODE V220/50/60
601513=GHEZ V220/50/60
300304/11=ODE V110/60
300304/24=ODE V24/50/60
700152/22=PARKER V220/50/60
700152/11=PARKER V110/60
COMPLETE
300203
300204
300205
547101
300206
514417 5gr
514418 6gr
521830 7gr
521832 8gr
521833 7gr
MICROFORI
MICROHOLES
521998 12gr
516575 12gr
521994 14gr
521997 14gr
514419 14gr
ridgeless
526208 18gr
526757 21gr
526758 24gr
521996 14gr
MICROFORI
MICROHOLES
BLIND FILTER
FILTRO CIECO
521902
518608 0,8mm
518608/5 0,5mm
518610 VITON
700005 = 8mm
300196 = 8,5mm ORIGINAL
700006 = 8,5mm
700007 = 9mm
516000 = 9mm
300214
612143=Ø1,1
612142=Ø1,2
300201
617940
TAPPO CROMATO
CHROMATE PLUG
300202
511673
632317
618522
502003
511672

CONTI

Tav. 02

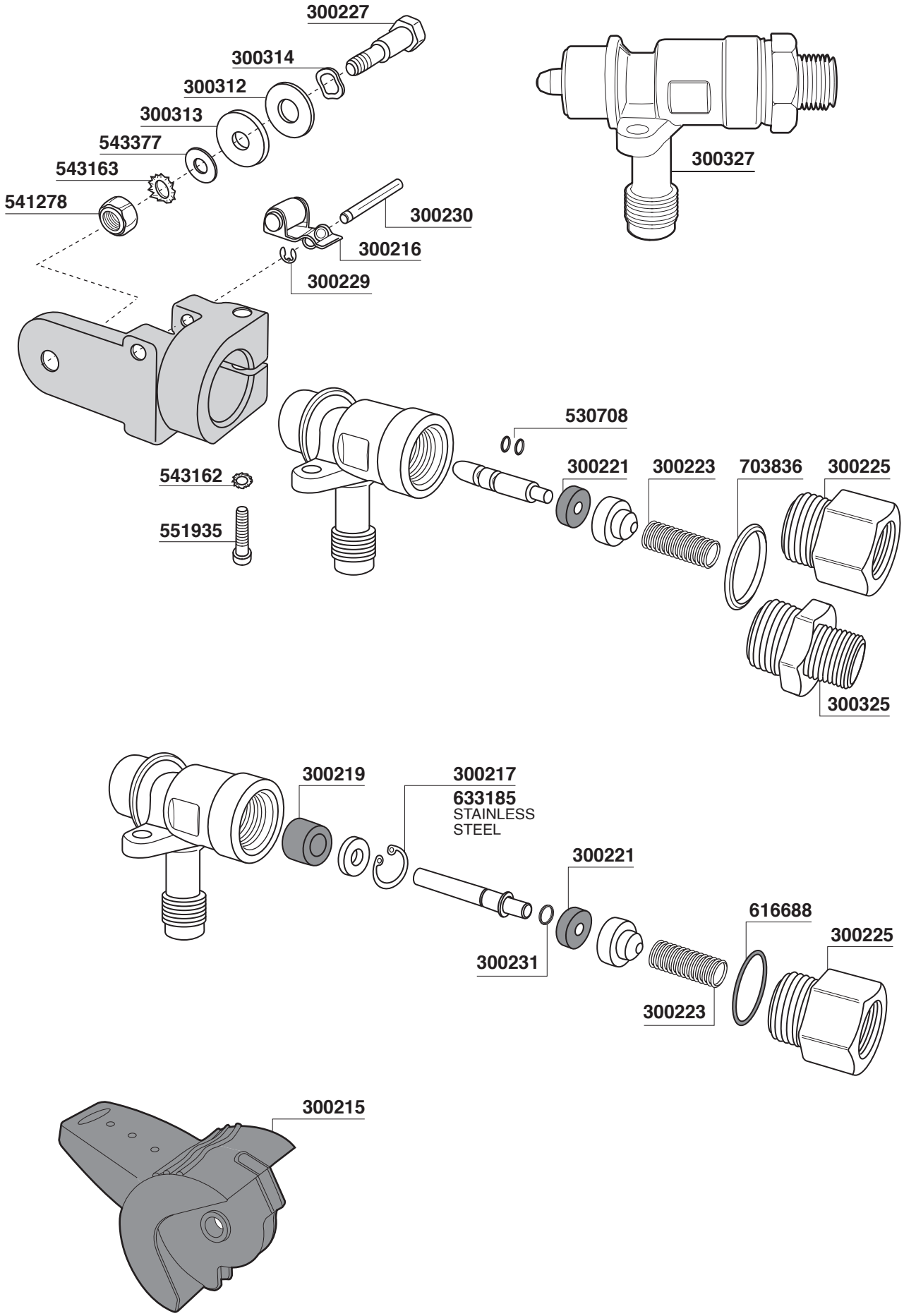
300227
300314
300312
300313
543377
543163
541278
300230
300216
300229
300327
530708
543162
551935
300221
300223
703836
300225
300325
300219
300217
633185
STAINLESS
STEEL
300221
616688
300225
300231
300223
300215

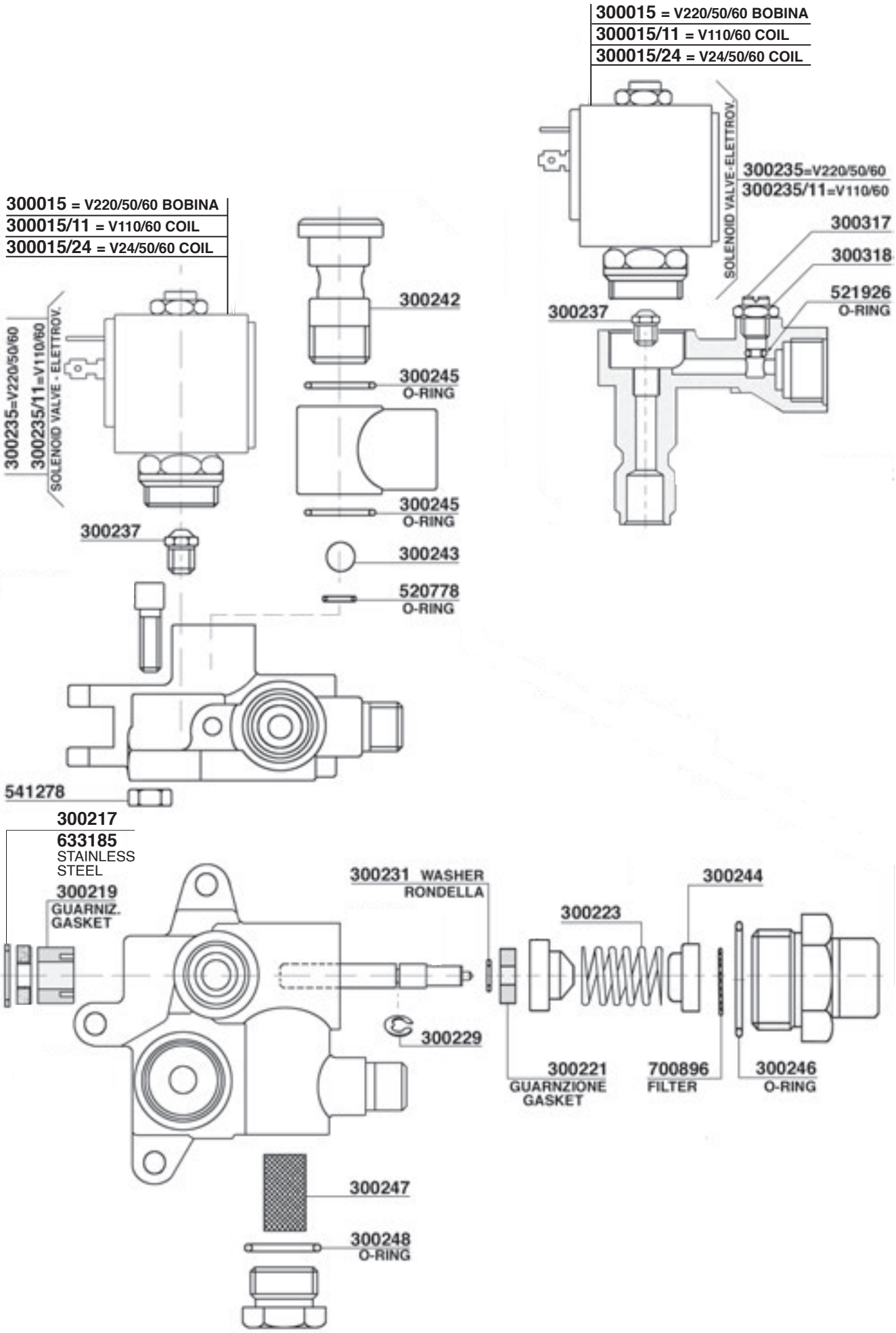
300015 = V220/50/60 BOBINA
300015/11 = V110/60 COIL
300015/24 = V24/50/60 COIL
SOLENOID VALVE - ELETTROV.
300235=V220/50/60
300235/11=V110/60
300317
300318
521926
O-RING
300237
300015 = V220/50/60 BOBINA
300015/11 = V110/60 COIL
300015/24 = V24/50/60 COIL
300235=V220/50/60
300235/11=V110/60
SOLENOID VALVE - ELETTROV.
300242
300245
O-RING
300245
O-RING
300237
300243
520778
O-RING
541278
300217
633185
STAINLESS STEEL
300219
GUARNIZ.
GASKET
300231 WASHER
RONDELLA
300244
300223
300229
300221
GUARNZIONE
GASKET
700896
FILTER
300246
O-RING
300247
300248
O-RING

CONTI

Tav. 04

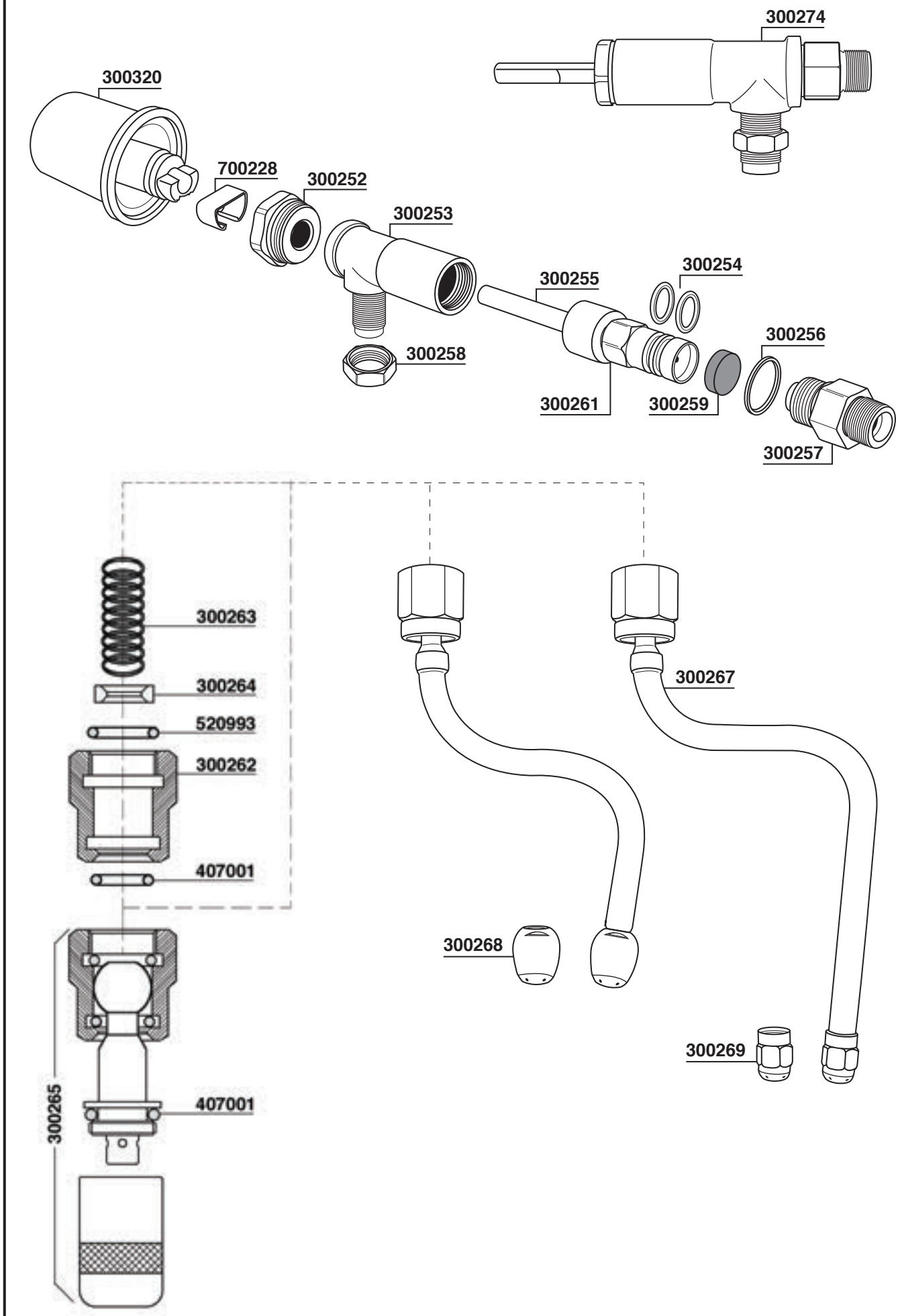
300274
300320
700228
300252
300253
300254
300255
300256
300258
300261
300259
300257
300263
300264
520993
300262
407001
300267
300268
300269
300265
407001

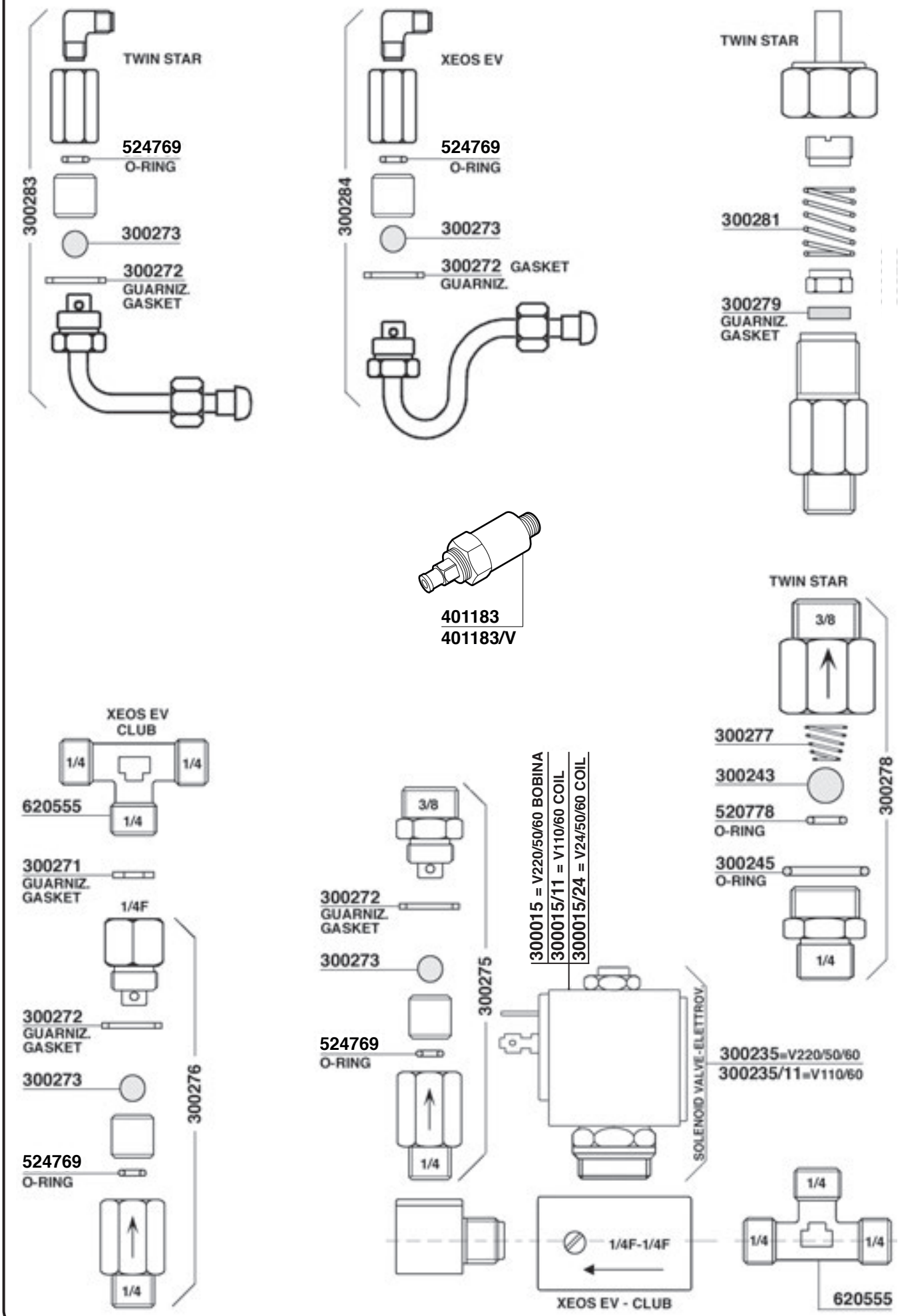
TWIN STAR
524769
O-RING
300283
300273
300272
GUARNIZ.
GASKET
XEOS EV
524769
O-RING
300284
300273
300272 GASKET
GUARNIZ.
TWIN STAR
300281
300279
GUARNIZ.
GASKET
401183
401183/V
TWIN STAR
3/8
300277
300243
520778
O-RING
300245
O-RING
1/4
300278
XEOS EV
CLUB
1/4
1/4
620555
1/4
300271
GUARNIZ.
GASKET
1/4F
300272
GUARNIZ.
GASKET
300273
524769
O-RING
1/4
300276
3/8
300272
GUARNIZ.
GASKET
300273
524769
O-RING
1/4
300275
300015 = V220/50/60 BOBINA
300015/11 = V110/60 COIL
300015/24 = V24/50/60 COIL
SOLENOID VALVE - ELETTROV.
300235=V220/50/60
300235/11=V110/60
1/4F-1/4F
XEOS EV - CLUB
1/4
1/4
1/4
620555

CONTI

Tav. 06

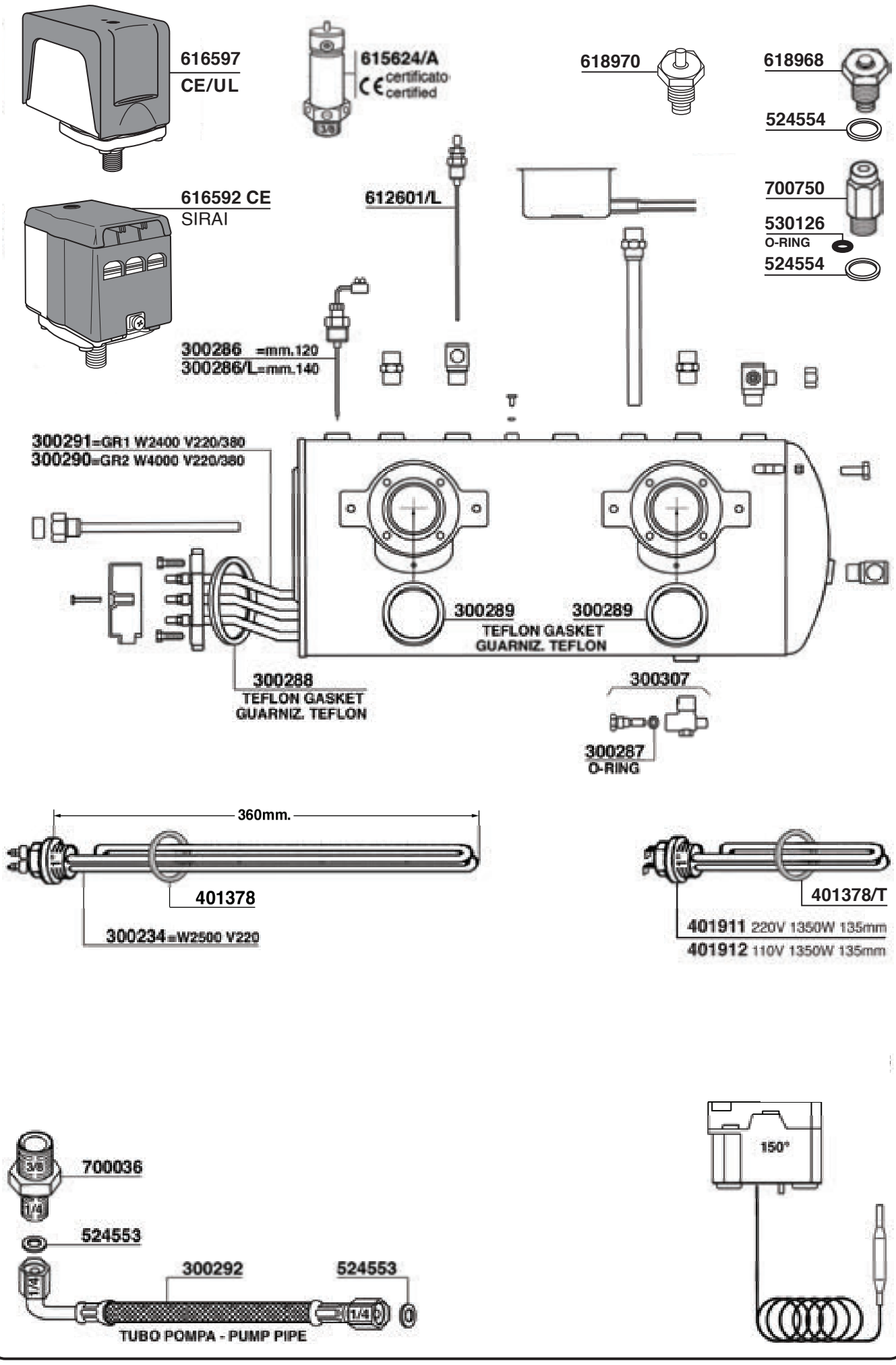
616597
CE/UL
615624/A
certificato
certified
618970
618968
524554
616592 CE
SIRAI
612601/L
700750
530126
O-RING
524554
300286 =mm.120
300286/L=mm.140
300291=GR1 W2400 V220/380
300290=GR2 W4000 V220/380
300289
300289
TEFLON GASKET
GUARNIZ. TEFLON
300288
TEFLON GASKET
GUARNIZ. TEFLON
300307
300287
O-RING
360mm.
401378
300234=W2500 V220
401378/T
401911 220V 1350W 135mm
401912 110V 1350W 135mm
700036
524553
300292
524553
TUBO POMPA - PUMP PIPE
150°

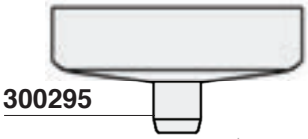

300295

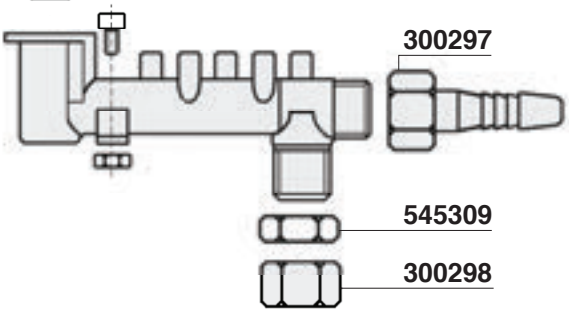

300297

545309

300298

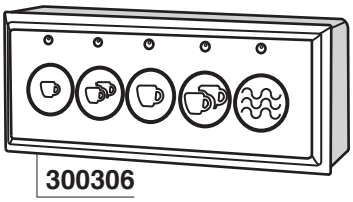

300306
PULSANTIERA CLUB
TOUCH PAD CLUB

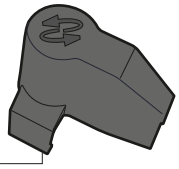

617902

530148

617903/G

615978/T

615979

551937

704047
GICAR CODE 9.0.25.03G

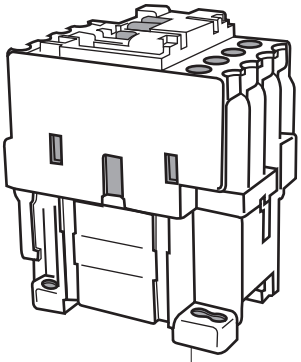

700930 220V
700931 110V

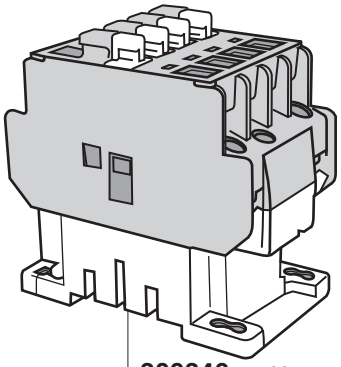

300346 220V
300345 110V

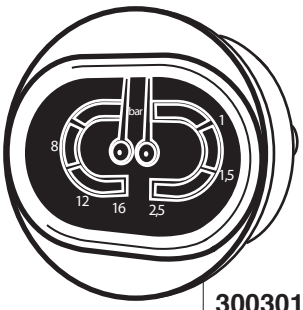

300301
2,5-16 BAR

300309
300309/X
STAINLESS STEEL

300331
Ø11x185mm

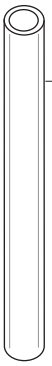

300330
Ø11x145mm

300308
Ø12x186mm

300310

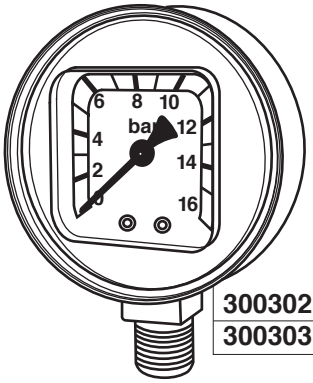

300302 16BAR
300303 3 BAR

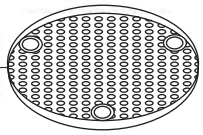

300311
300207

DALLA CORTE

Tav.01

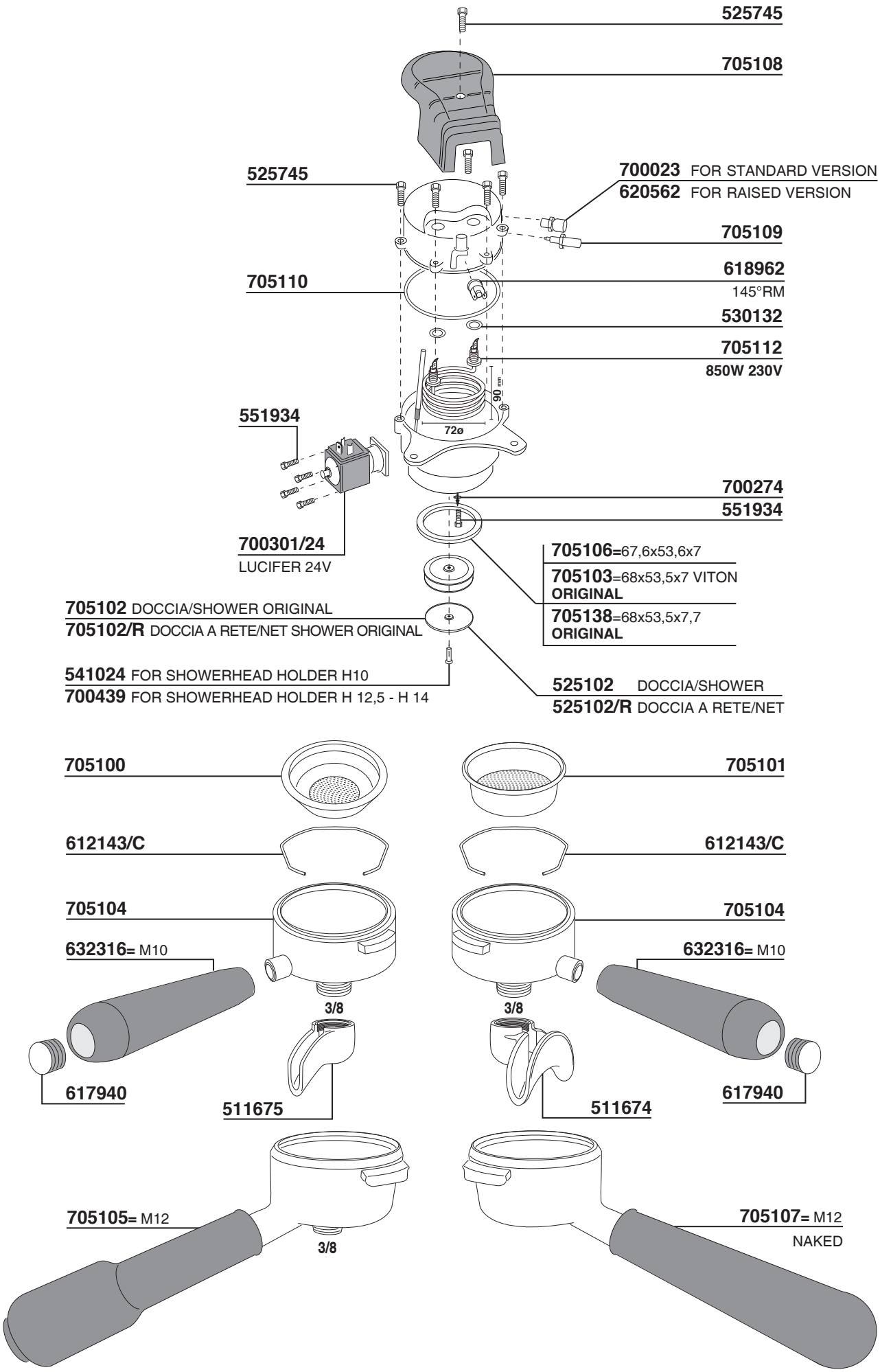

DALLA CORTE

Tav. 02

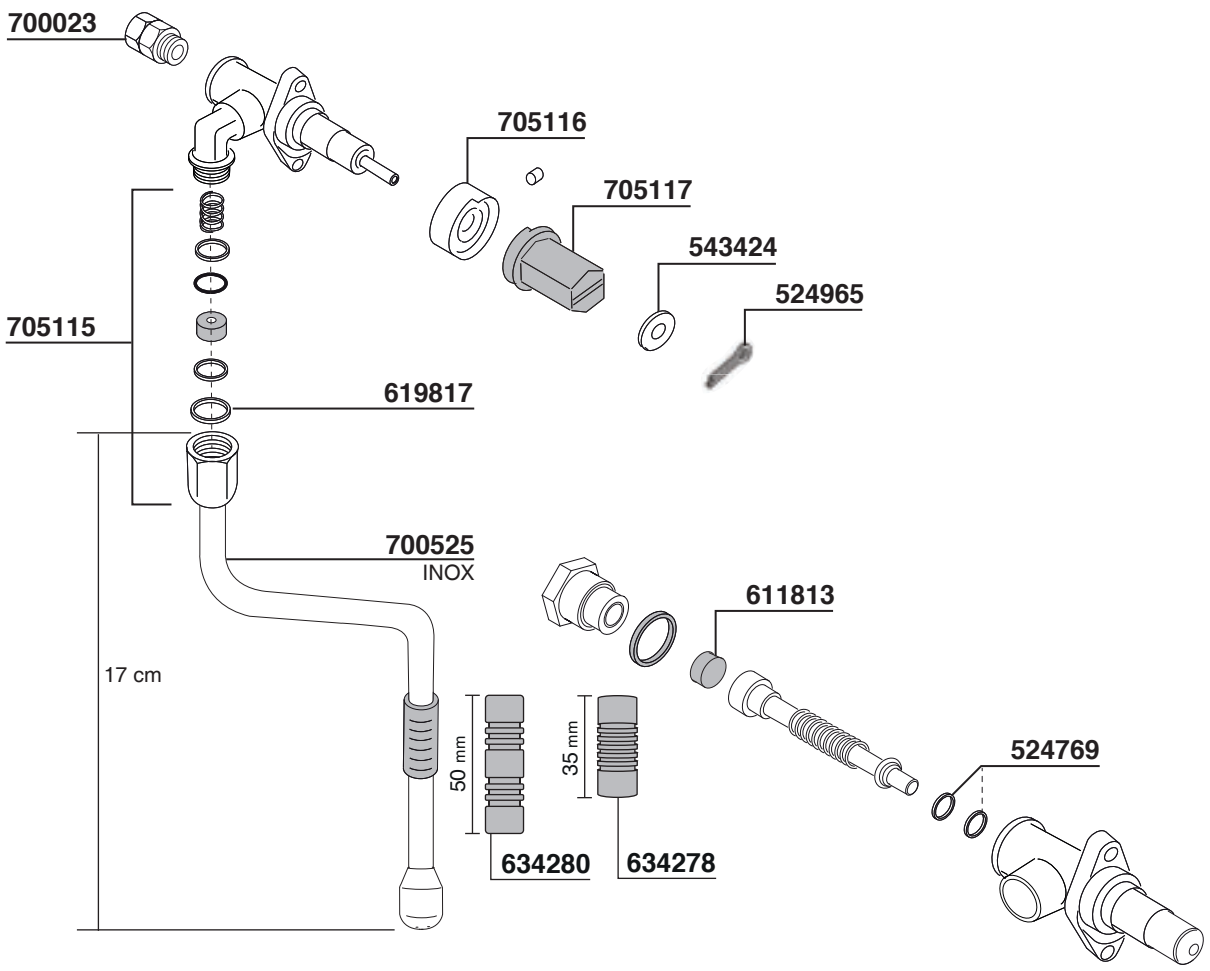

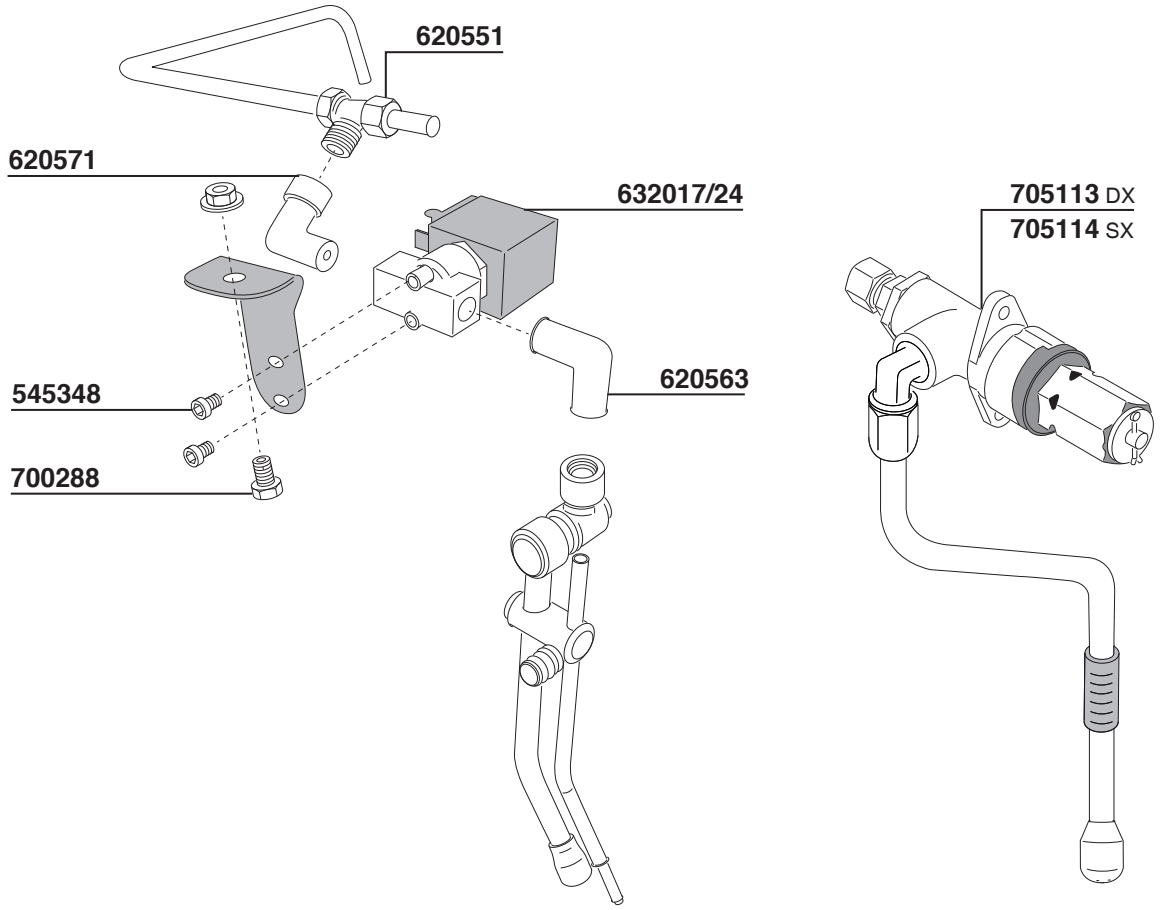

DALLA CORTE

Tav. 03

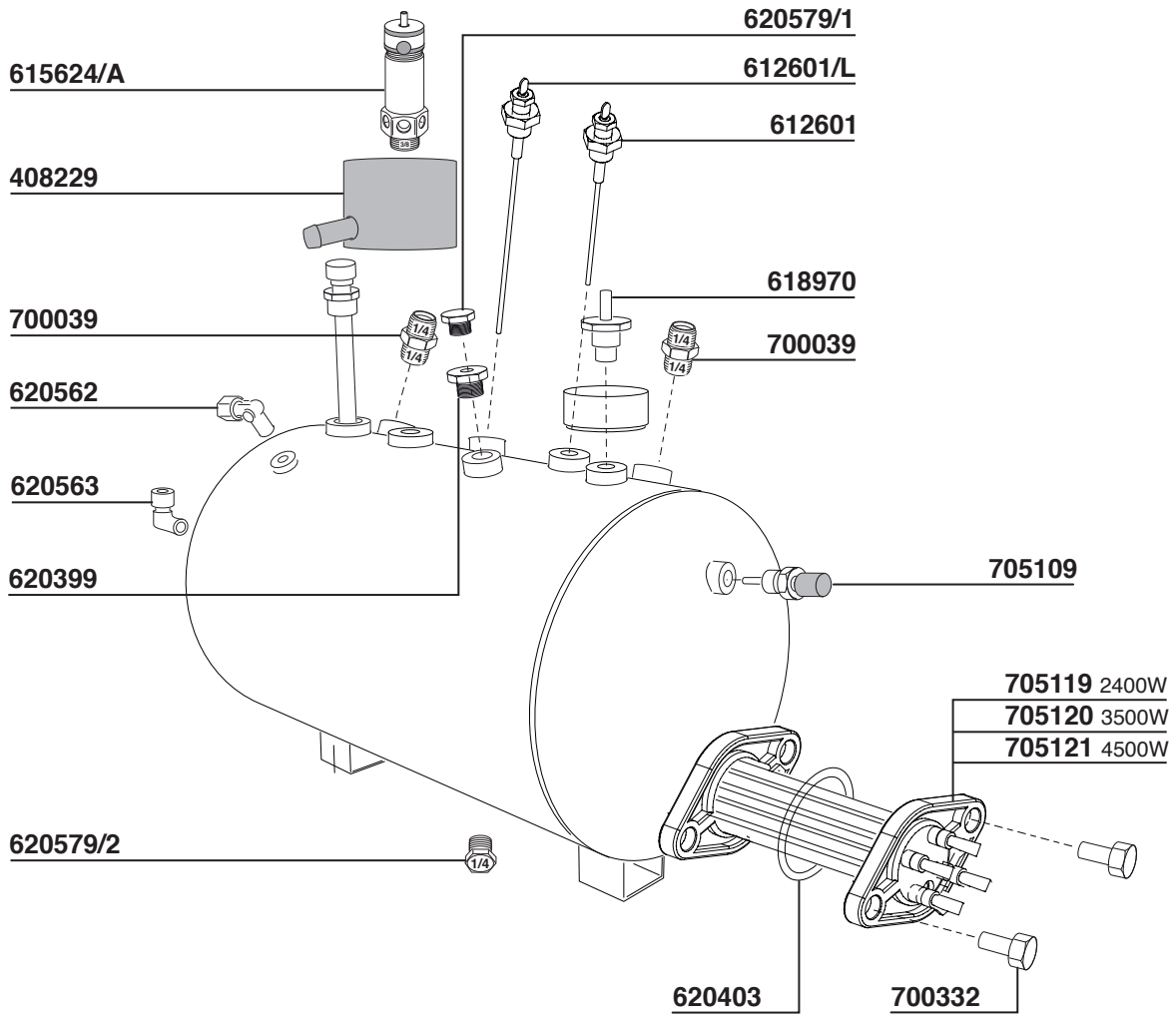

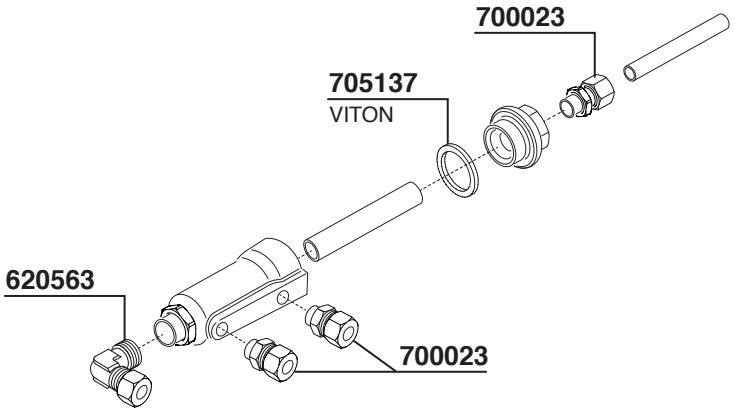

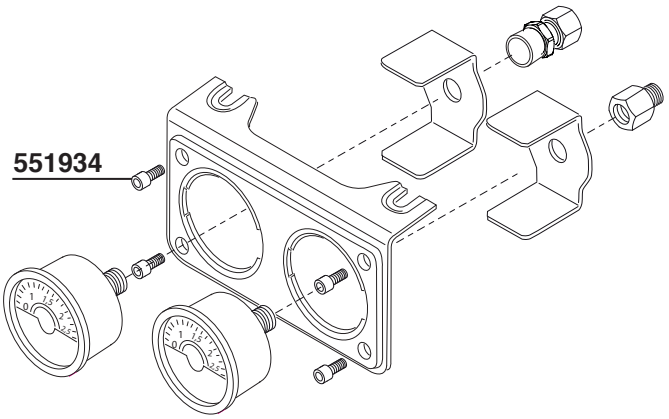

DALLA CORTE

Tav. 04

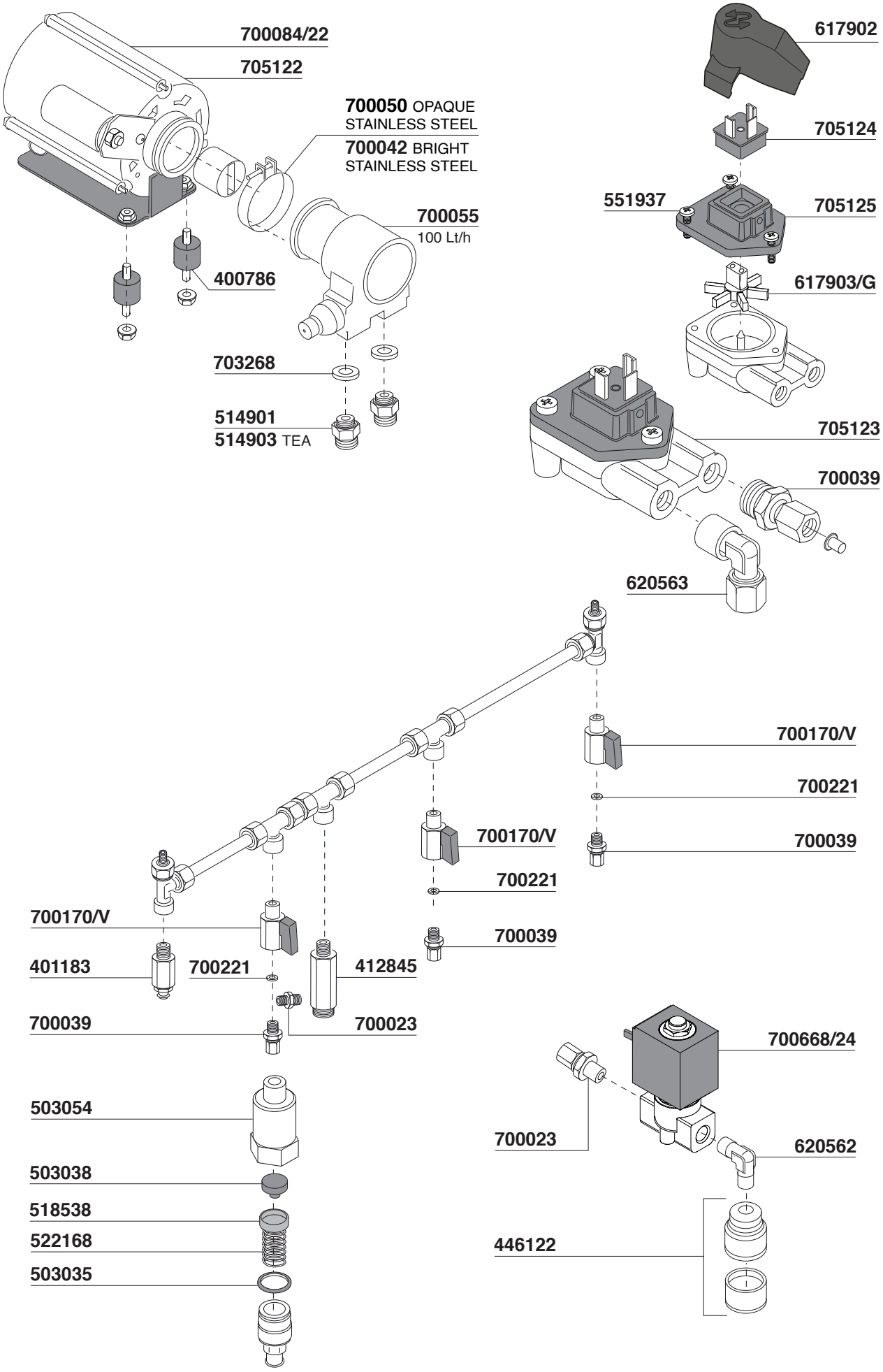

DALLA CORTE

Tav. 05

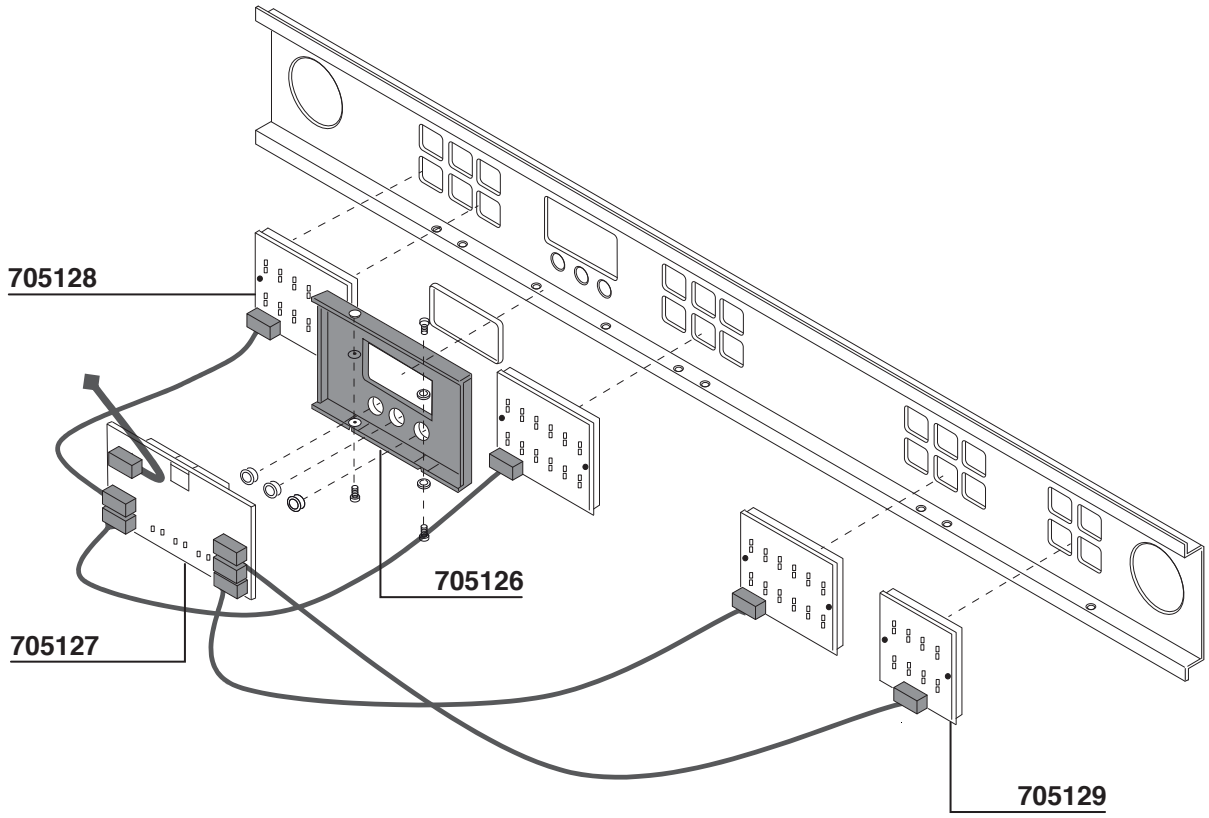

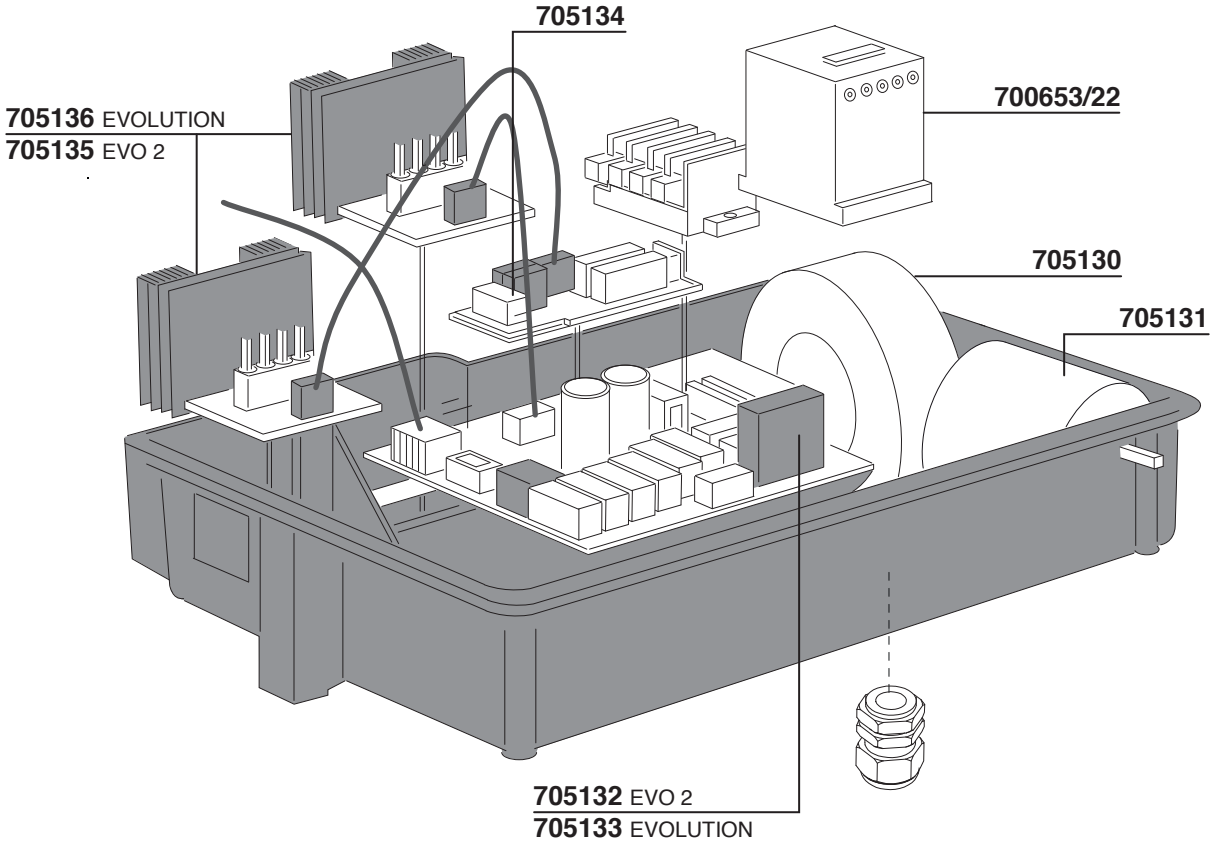

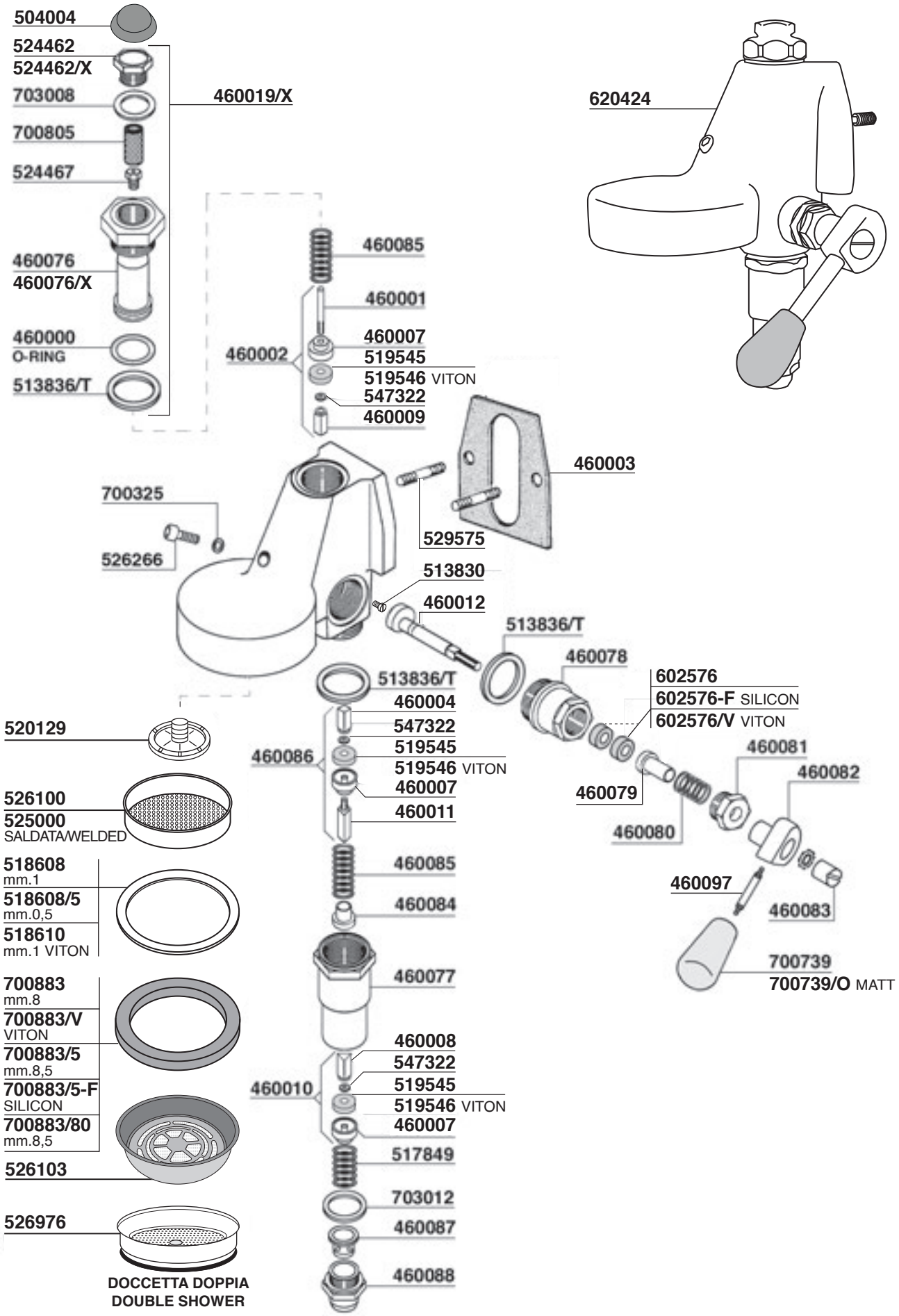
504004
524462
524462/X
703008
700805
524467
460019/X
460076
460076/X
460000
O-RING
513836/T
620424
460085
460001
460007
519545
460002
519546 VITON
547322
460009
460003
700325
526266
529575
513830
460012
513836/T
460078
602576
602576-F SILICON
602576/V VITON
513836/T
460004
547322
520129
519545
460086
519546 VITON
460007
460011
526100
525000
SALDATA/WELDED
460081
460082
460079
460080
518608
mm.1
518608/5
mm.0,5
518610
mm.1 VITON
460085
460084
460097
460083
700739
700739/O MATT
460077
700883
mm.8
700883/V
VITON
700883/5
mm.8,5
700883/5-F
SILICON
700883/80
mm.8,5
460008
547322
460010
519545
519546 VITON
460007
517849
526103
703012
526976
460087
460088
DOCCETTA DOPPIA
DOUBLE SHOWER

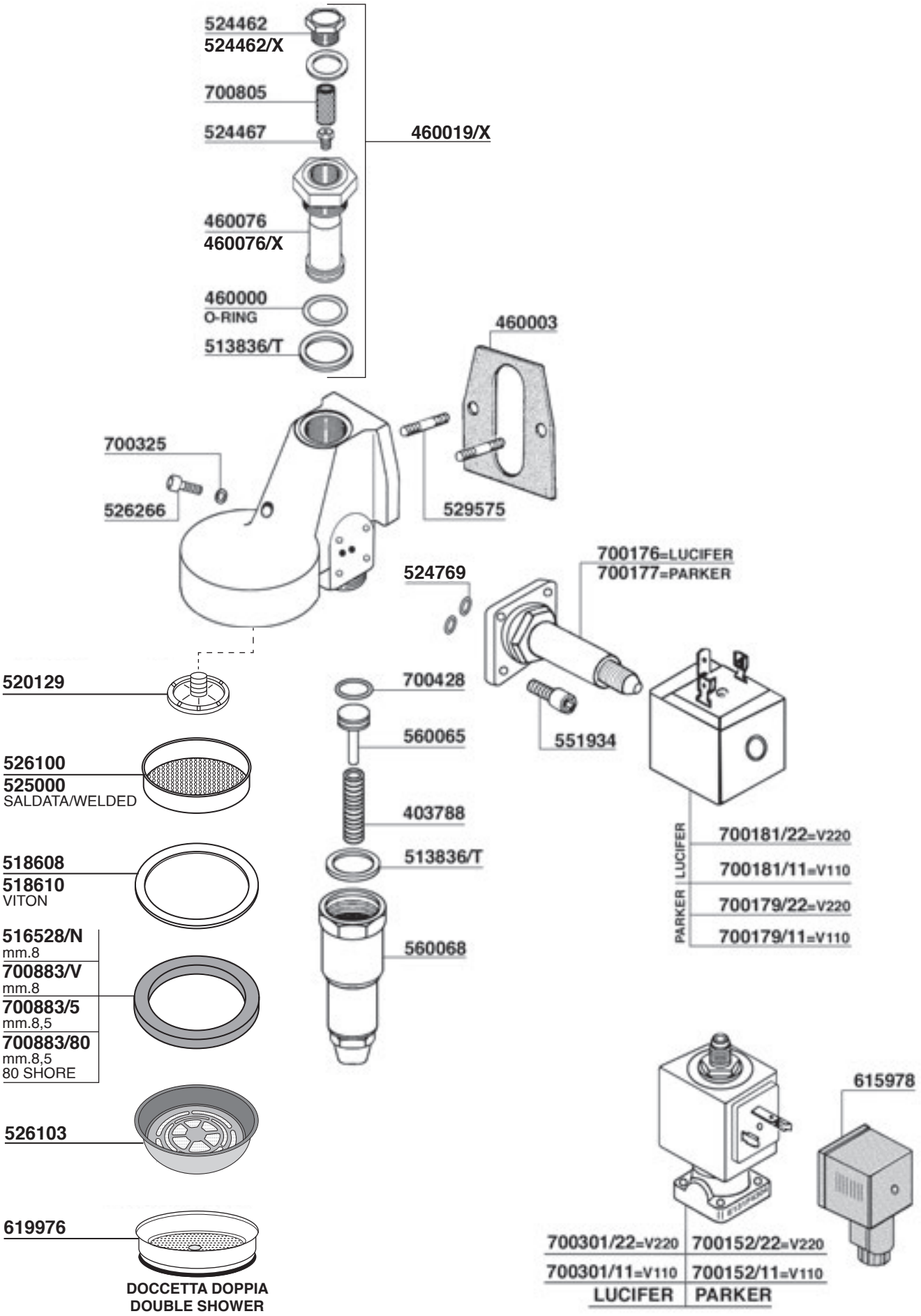
524462
524462/X
700805
524467
460019/X
460076
460076/X
460000
O-RING
513836/T
460003
700325
526266
529575
524769
700176=LUCIFER
700177=PARKER
520129
700428
560065
551934
526100
525000
SALDATA/WELDED
403788
513836/T
518608
518610
VITON
LUCIFER
700181/22=V220
700181/11=V110
PARKER
700179/22=V220
700179/11=V110
516528/N
mm.8
700883/V
mm.8
700883/5
mm.8,5
700883/80
mm.8,5
80 SHORE
560068
526103
615978
619976
700301/22=V220
700152/22=V220
700301/11=V110
700152/11=V110
LUCIFER
PARKER
DOCCETTA DOPPIA
DOUBLE SHOWER

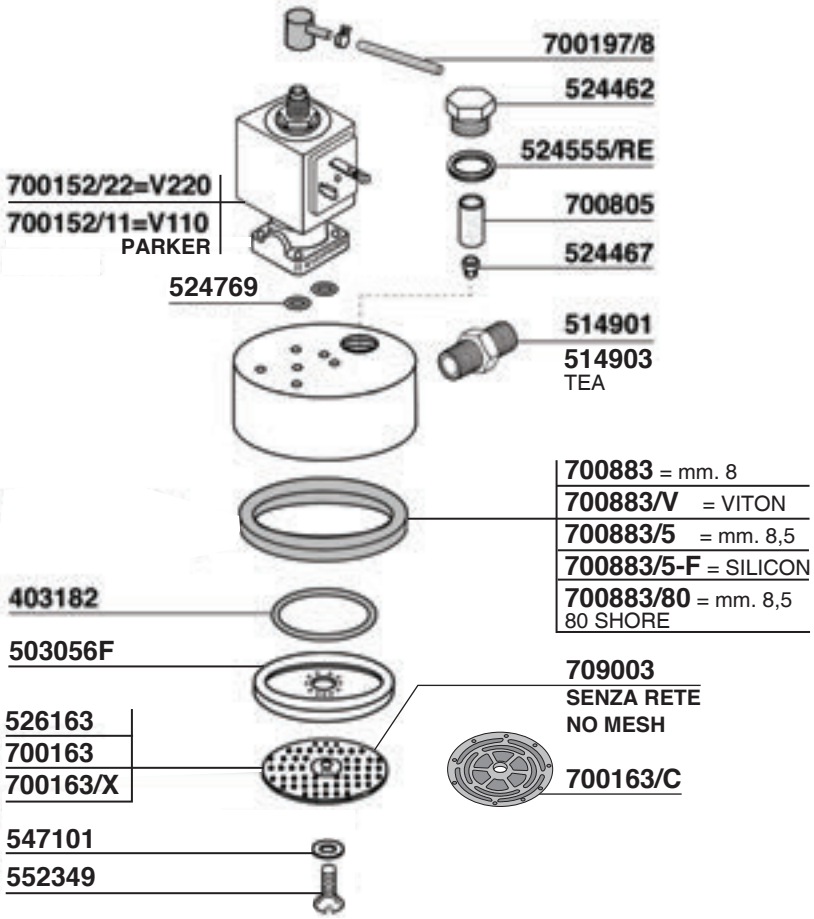

514417 5gr
514418 6gr
521834 6gr
521830 7gr
521835 7gr
521832 8gr
521833 7gr
MICROFORI
MICROHOLES

516575 12gr
521998 12gr
521994 14gr
521997 14gr
514419 14gr ridgeless
526208 18gr
526757 21gr
526758 24gr
521996 14gr
MICROFORI
MICROHOLES

521901
521902

ECM

Tav. 04

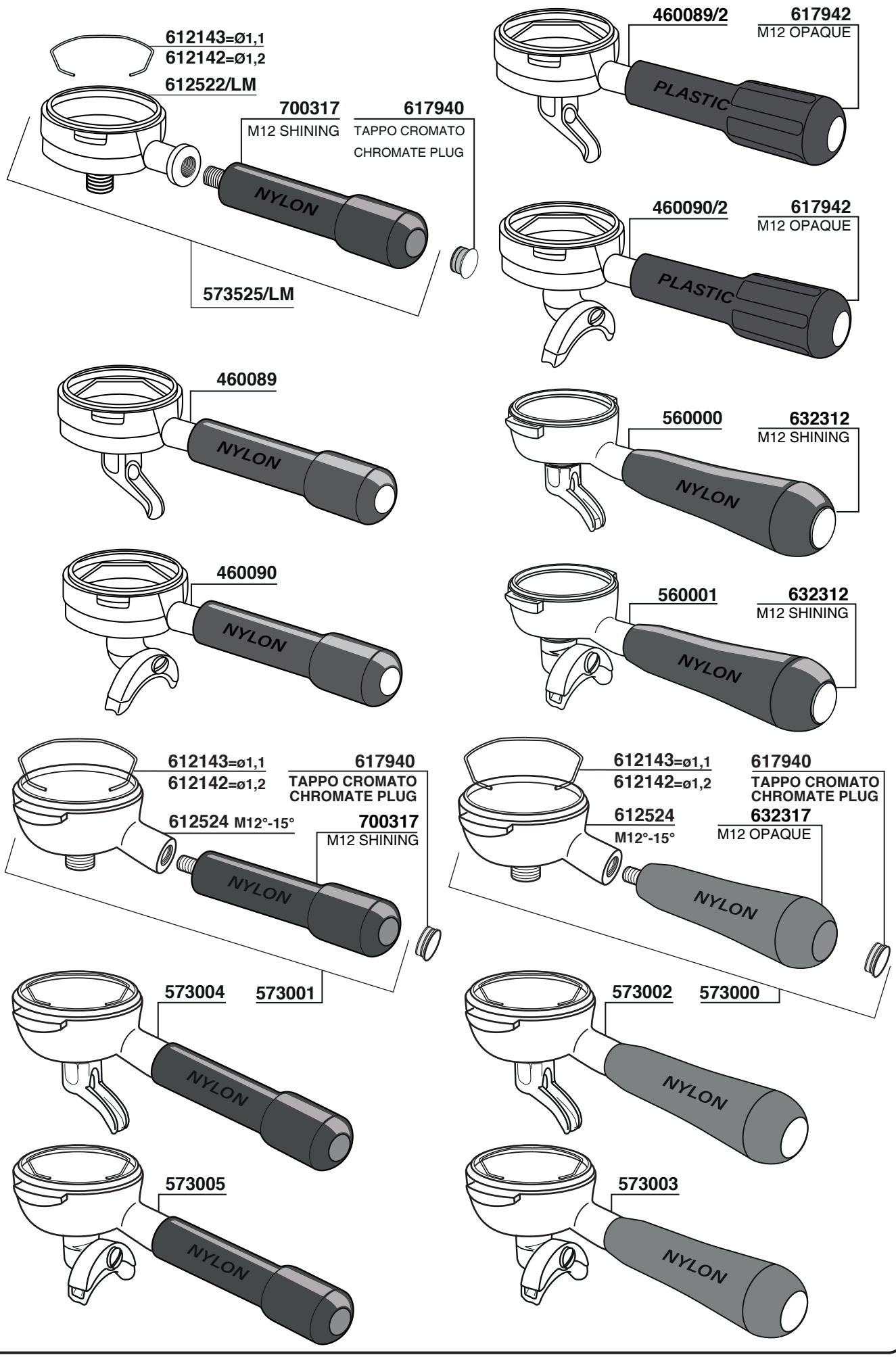
612143=Ø1,1
612142=Ø1,2
612522/LM
700317
M12 SHINING
617940
TAPPO CROMATO
CHROMATE PLUG
NYLON
573525/LM
460089/2
617942
M12 OPAQUE
PLASTIC
460090/2
617942
M12 OPAQUE
PLASTIC
460089
NYLON
560000
632312
M12 SHINING
NYLON
460090
NYLON
560001
632312
M12 SHINING
NYLON
612143=ø1,1
612142=ø1,2
617940
TAPPO CROMATO
CHROMATE PLUG
612524 M12°-15°
700317
M12 SHINING
NYLON
612143=ø1,1
612142=ø1,2
617940
TAPPO CROMATO
CHROMATE PLUG
612524
M12°-15°
632317
M12 OPAQUE
NYLON
573004
573001
NYLON
573002
573000
NYLON
573005
NYLON
573003
NYLON

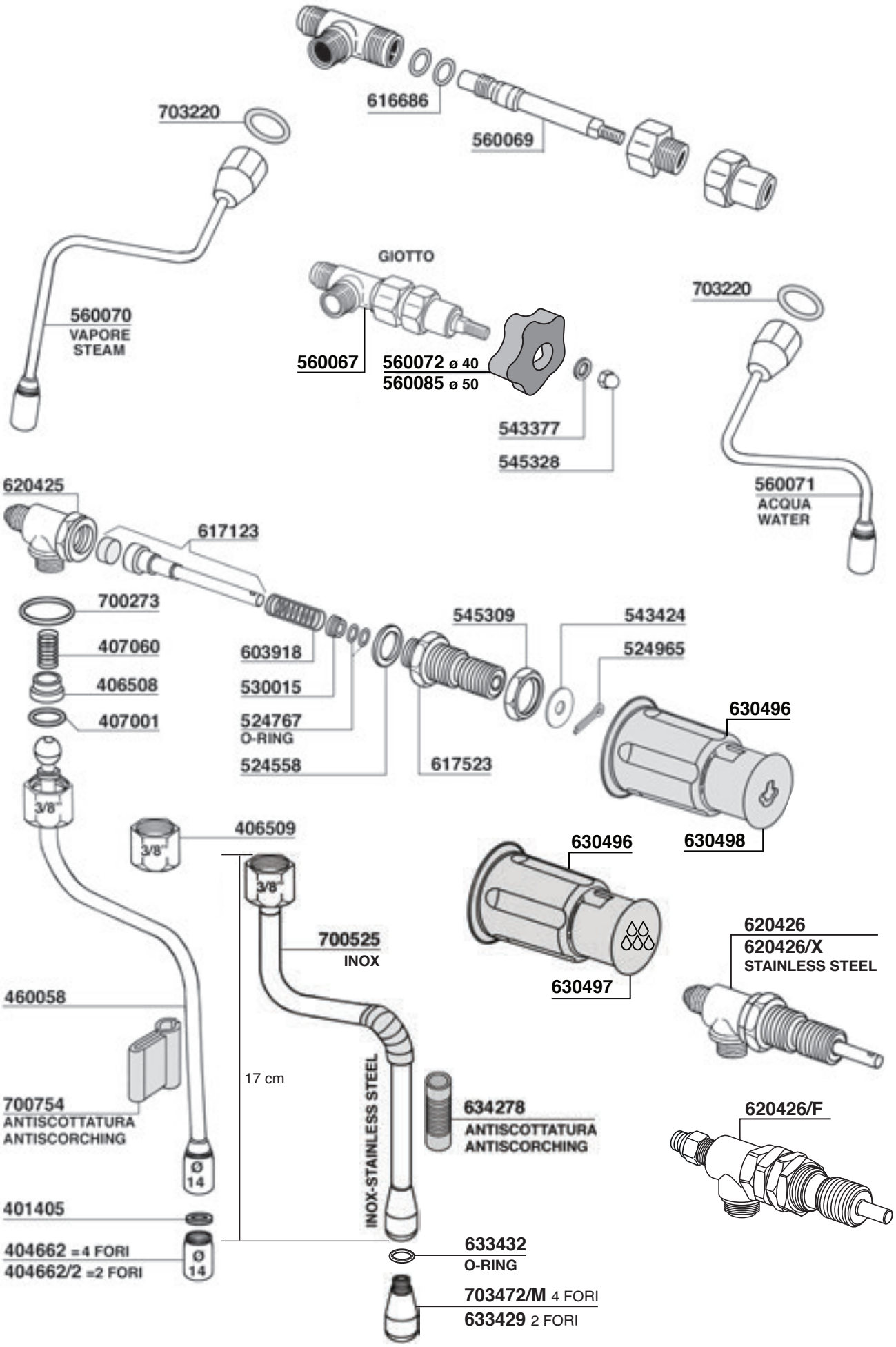
616686
560069
703220
560070
VAPORE
STEAM
GIOTTO
560067
560072 ø 40
560085 ø 50
543377
545328
703220
560071
ACQUA
WATER
620425
617123
700273
407060
406508
407001
603918
530015
524767
O-RING
524558
617523
545309
543424
524965
630496
630498
3/8"
406509
630496
630497
700525
INOX
620426
620426/X
STAINLESS STEEL
460058
17 cm
INOX-STAINLESS STEEL
634278
ANTISCOTTATURA
ANTISCORCHING
620426/F
700754
ANTISCOTTATURA
ANTISCORCHING
Ø 14
401405
404662 =4 FORI
404662/2 =2 FORI
633432
O-RING
703472/M 4 FORI
633429 2 FORI

ECM

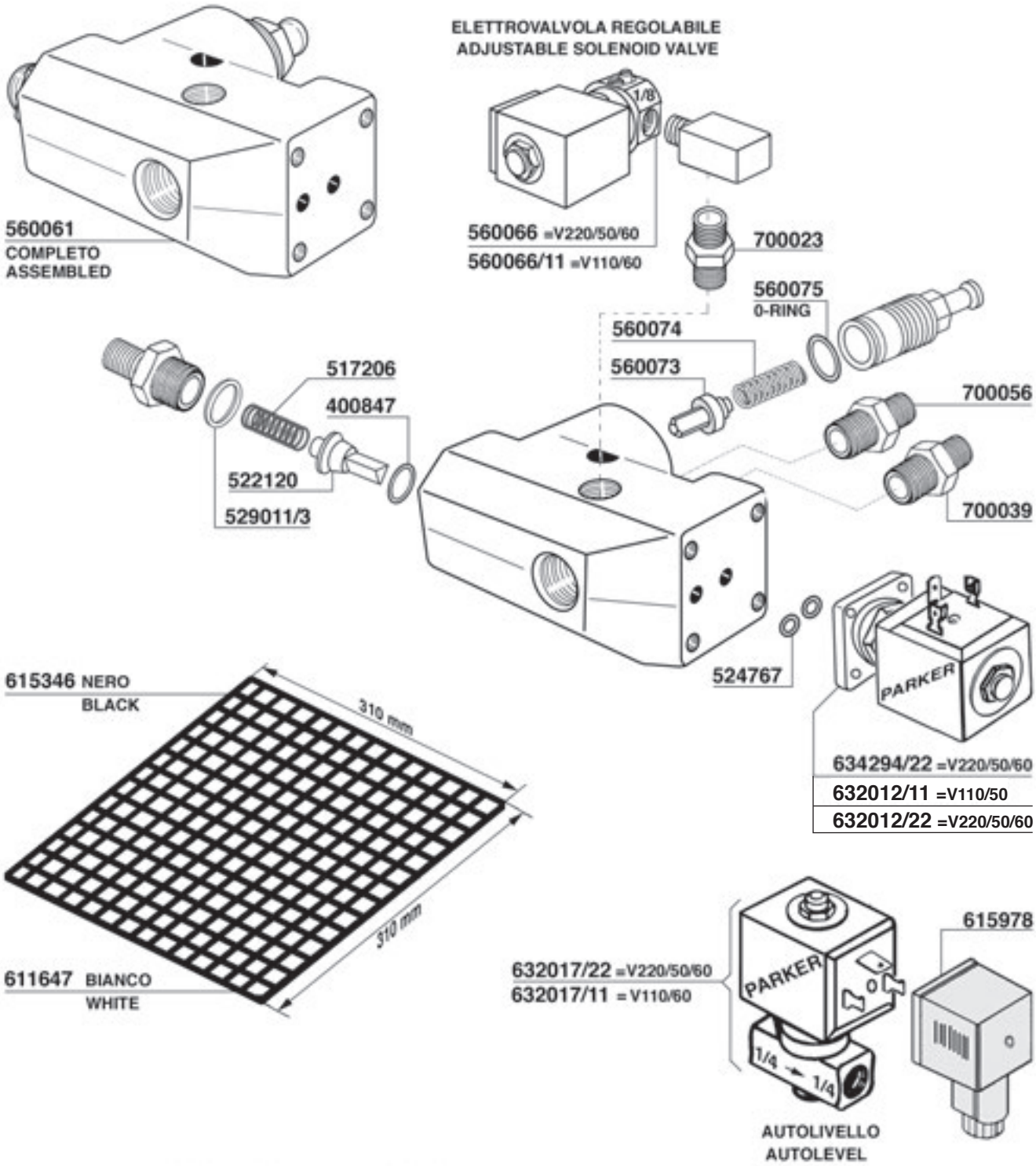

TUBO SCARICO - DRAIN HOSES
PLASTICA NERO - BLACK PLASTIC

560060 = Ø20x24

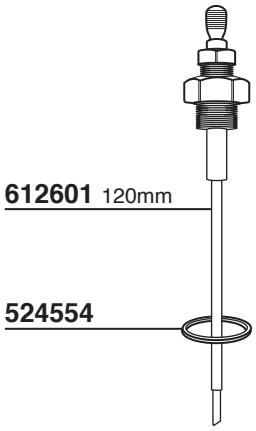

TUBI INOX - STAINLESS STEEL HOSES
BAR 12 - t.90°

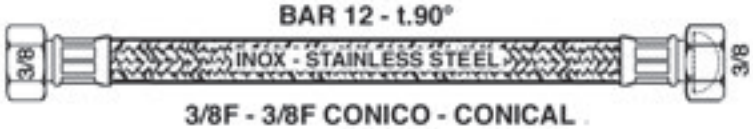

3/8F - 3/8F CONICO - CONICAL

700182= cm.50

700184/S= cm.150

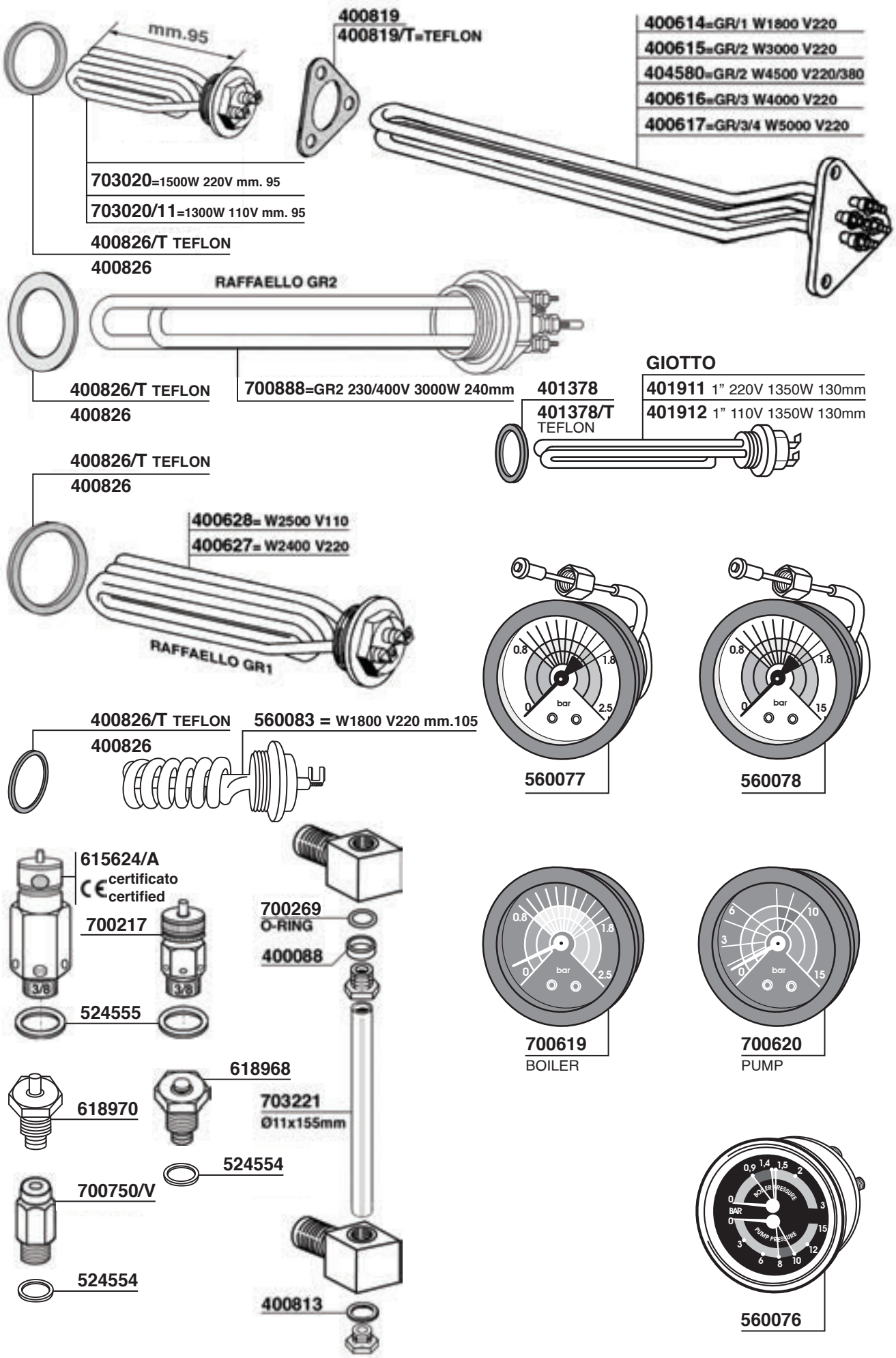
mm.95
400819
400819/T=TEFLON
400614=GR/1 W1800 V220
400615=GR/2 W3000 V220
404580=GR/2 W4500 V220/380
400616=GR/3 W4000 V220
400617=GR/3/4 W5000 V220
703020=1500W 220V mm. 95
703020/11=1300W 110V mm. 95
400826/T TEFLON
400826
RAFFAELLO GR2
400826/T TEFLON
400826
700888=GR2 230/400V 3000W 240mm
GIOTTO
401378
401378/T
TEFLON
401911 1" 220V 1350W 130mm
401912 1" 110V 1350W 130mm
400826/T TEFLON
400826
400628= W2500 V110
400627= W2400 V220
RAFFAELLO GR1
400826/T TEFLON
400826
560083 = W1800 V220 mm.105
0.8
1.8
0
bar
2.5
560077
0.8
1.8
0
bar
15
560078
615624/A
certificato
certified
700217
3/8
3/8
524555
700269
O-RING
400088
0.8
1.8
0
bar
2.5
700619
BOILER
6
10
3
0
bar
15
700620
PUMP
618968
618970
703221
Ø11x155mm
524554
700750/V
524554
400813
0,9
1,4
1,5
2
0
BOILER PRESSURE
3
BAR
0
15
PUMP PRESSURE
3
12
6
8
10
560076

ECM

Tav. 08

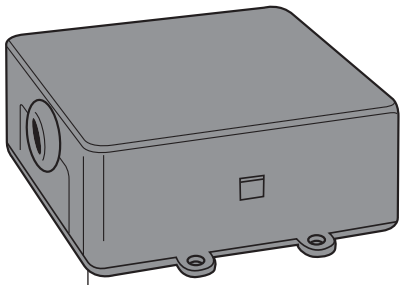

560063
CENTRALINA GR2/3 V230/50/60
GICAR CODE 9.5.2202G 07

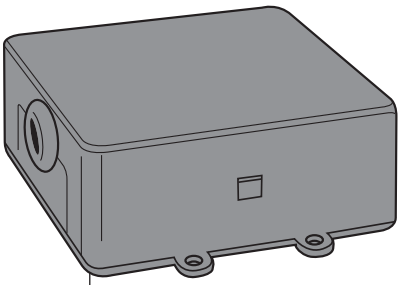

560079
CENTRALINA GR2/3 V230/50/60
GICAR CODE 9.5.25.20G 00

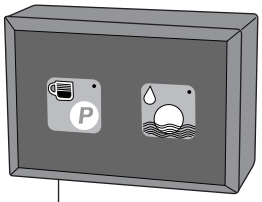

560086
RAFFAELLO
GICAR CODE 9.9.09.01G

560084
VIVALDI / RAFFAELLO
GICAR CODE 9.9.08.82G

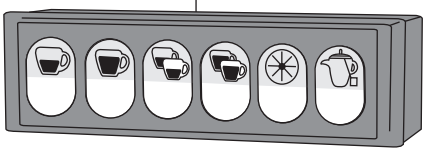

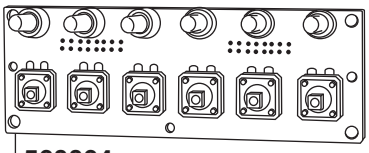

560064
PULSANTIERA VENEZIANO GR2/3
GICAR CODE 9.9.11.99G

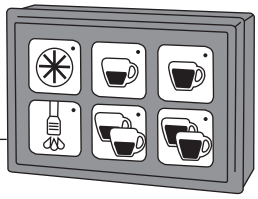

620705
GICAR CODE 9.9.09.28

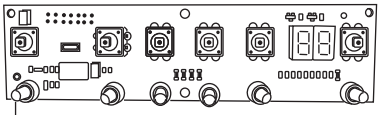

620735
GICAR CODE 9.9.08.01G

8 PIN DOPPI
8 DOUBLE PINS

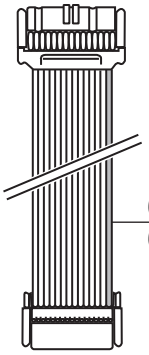

620705/A 16 PIN
RAFFAELLO / MICHELANGELO
GICAR CODE 9.9.09.25G

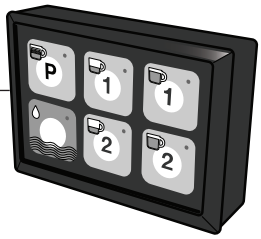

620707 800 mm
620716 1000 mm

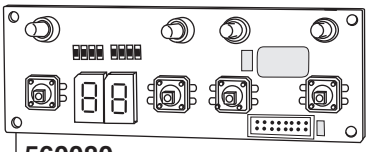

560080
PULSANTIERA P4
CROMO MICHELANGELO
GICAR CODE 9.9.09.48G

620748
GICAR CODE 8.9.48.76

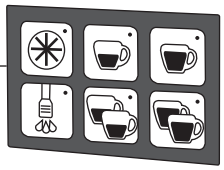

551937
530148
617903/G
615978/T
615979
620405

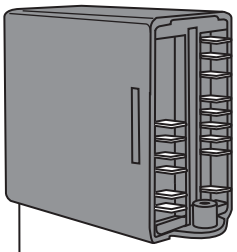

560087 230V
CELLINI
GICAR CODE 9.9.04.76G

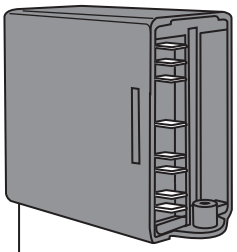

CENTRALINA AUTOLIVELLO
AUTOFILL ELECTRONIC BOX
560062/11 110V
GICAR CODE 9.9.04.77G

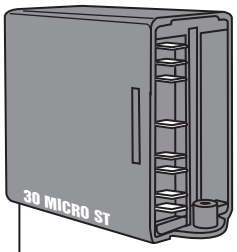

560081 110V
GICAR CODE 9.1.04.57G
560082 230/240V - 50/60 Hz
GICAR CODE 9.1.40.56G

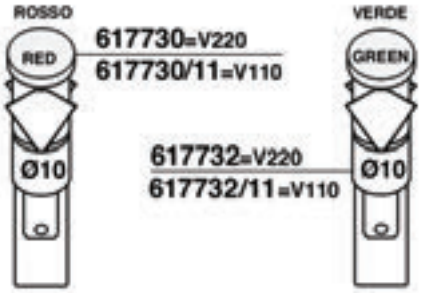

617730=V220
617730/11=V110
617732=V220
617732/11=V110

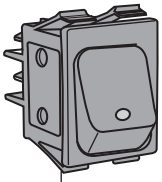

579671
NERO/BLACK

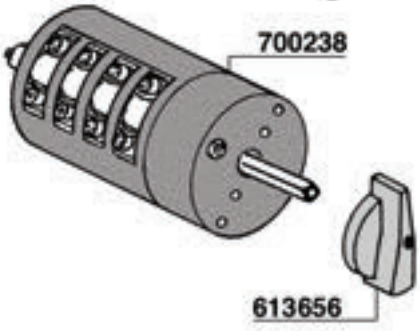

700238
613656

SYNCHRONIKA - TECHNIKA IV - MECHANIKA IV

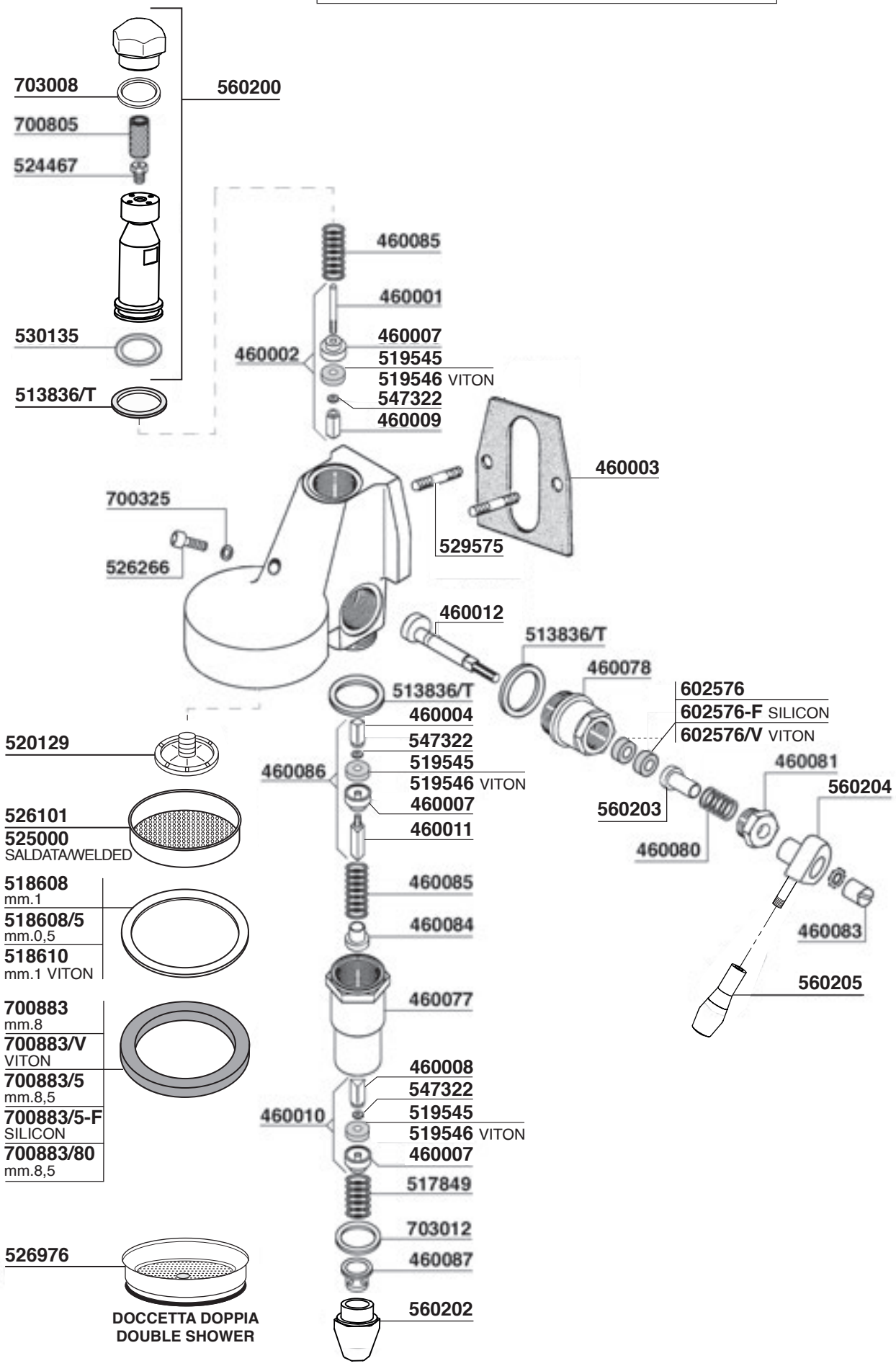

ECM DE

Tav. 02

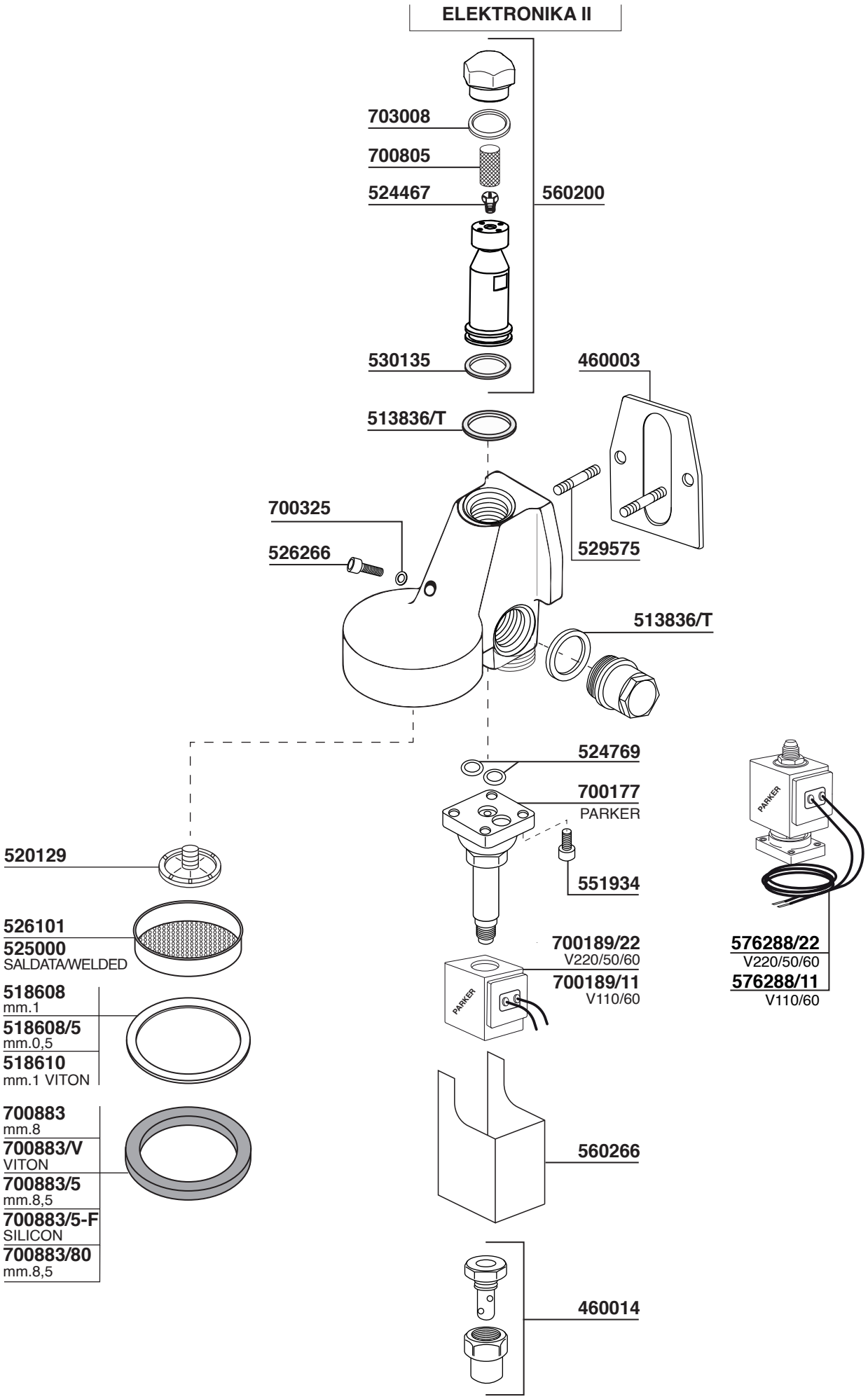
ELEKTRONIKA II
703008
700805
524467
560200
530135
460003
513836/T
700325
526266
529575
513836/T
524769
700177
PARKER
551934
520129
526101
525000
SALDATA/WELDED
700189/22
V220/50/60
700189/11
V110/60
576288/22
V220/50/60
576288/11
V110/60
518608
mm.1
518608/5
mm.0,5
518610
mm.1 VITON
700883
mm.8
700883/V
VITON
700883/5
mm.8,5
700883/5-F
SILICON
700883/80
mm.8,5
560266
460014

SYNCHRONIKA - TECHNIKA IV
MECHANIKA IV - ELEKTRONIKA II

514417 5gr
514418 6gr
526418 6gr
521834 6gr
521830 7gr
521835 7gr
521832 8gr
521833 7gr
MICROFORI
MICROHOLES

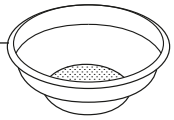

612143 Ø1,1 mm
612142 Ø1,2 mm

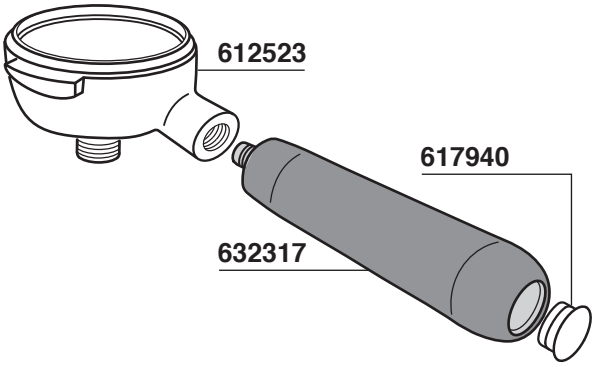

516575 12gr
521998 12gr
521994 14gr
521997 14gr
514419 14gr
ridgeless
526208 18gr
526757 21gr
300059 21gr
526758 24gr
521996 14gr
MICROFORI
MICROHOLES

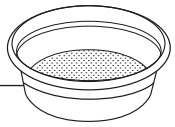

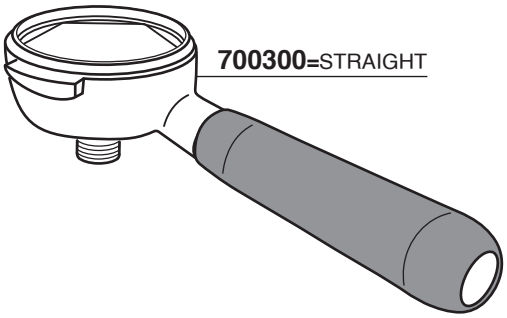

521901
521902

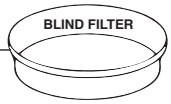

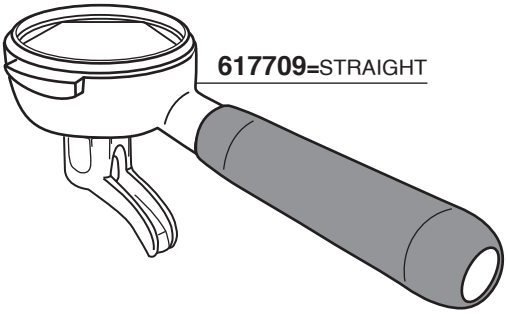

511675

511674

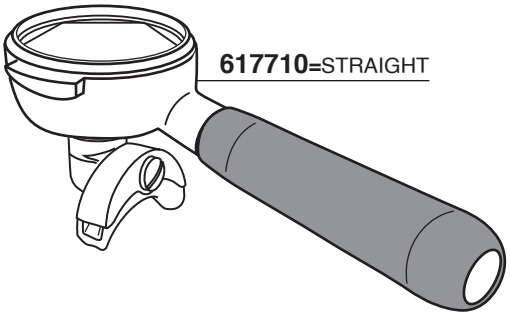

ECM DE

Tav.04

SYNCHRONIKA

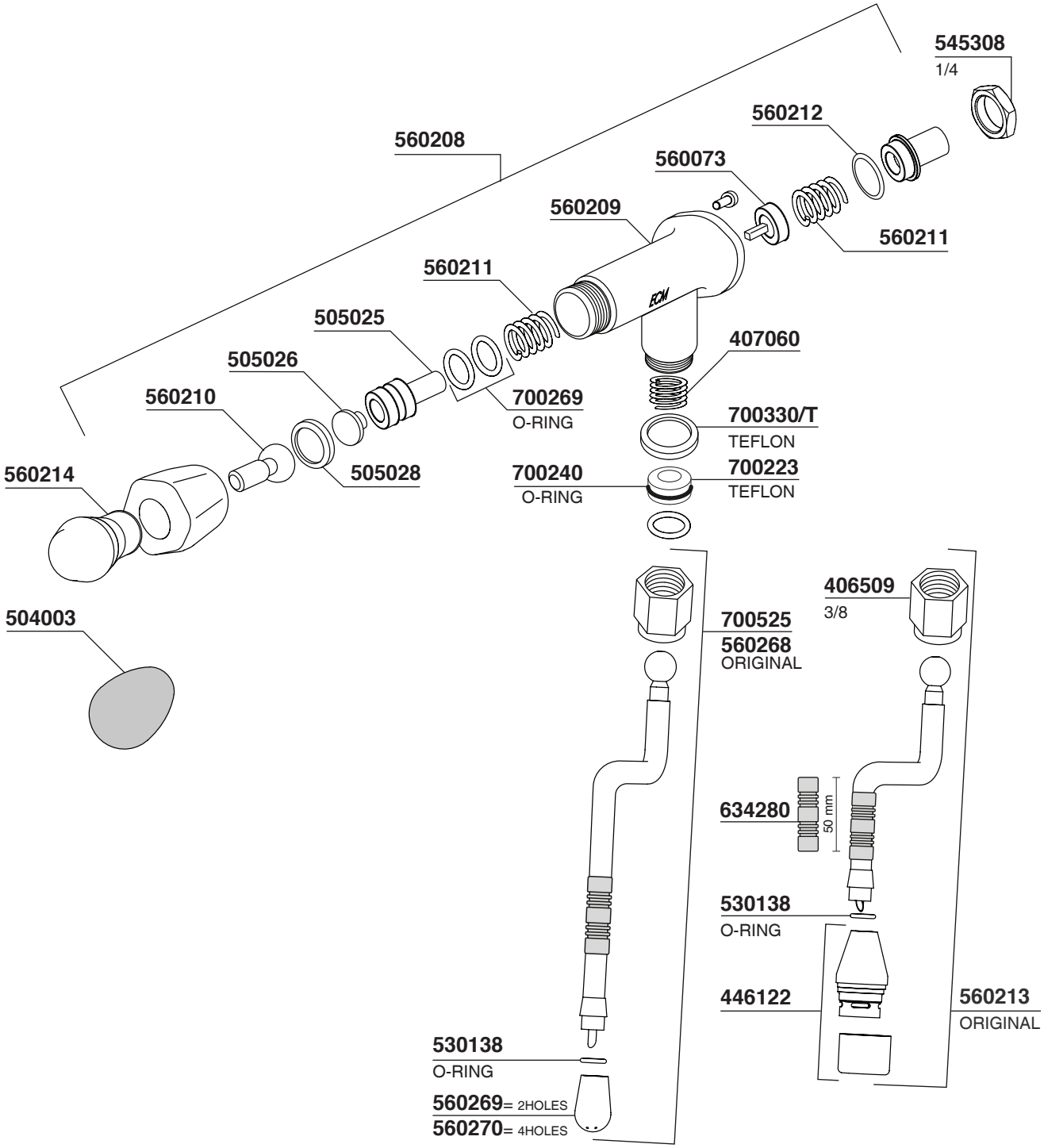

TECHNIKA IV
MECHANIKA IV
ELEKTRONIKA II

545308
505024
560211
560073
560235
560234
522127/C
700330/T
560211
505025
460039
700269
616686
505026
460091
560210
505028
505029
504003
407001
O-RING
406509
3/8
700525
560268
ORIGINAL
560236
ORIGINAL
634280
530138
O-RING
560269= 2HOLES
560270= 4HOLES
446122

TECHNIKA IV
MECHANIKA IV

560241
CHROME
545308
560238
560237
700330/T
TEFLON
530141
407060
560239
700223
TEFLON
560243
STEAM
560240
700240
560242
545327
560244
WATER
407001
O-RING
406509
3/8
700525
560268
ORIGINAL
560236
ORIGINAL
634280
530138
O-RING
560269= 2HOLES
560270= 4HOLES
446122

ECM DE

Tav. 06

SYNCHRONIKA

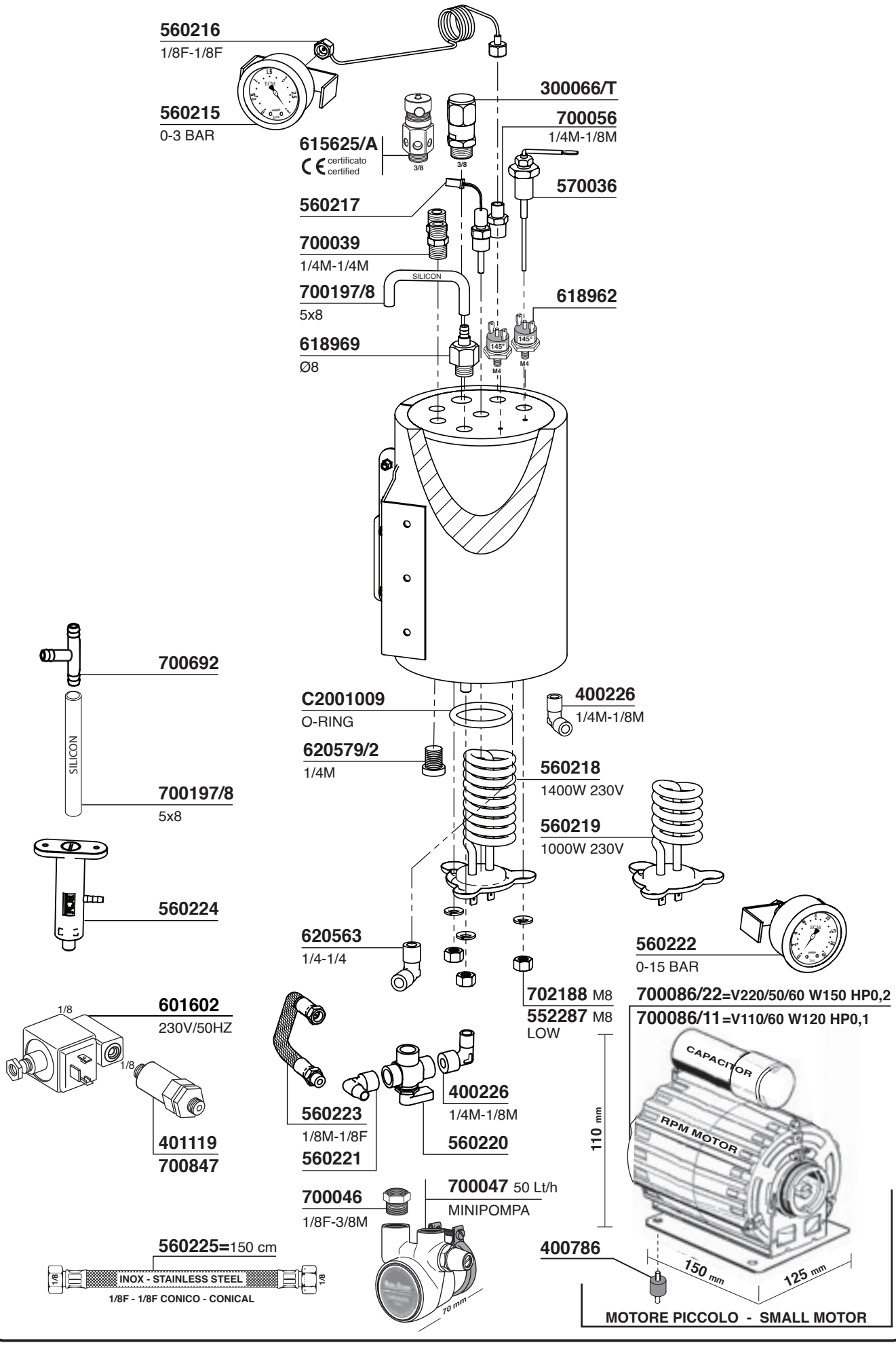

TECHNIKA IV - MECHANIKA IV

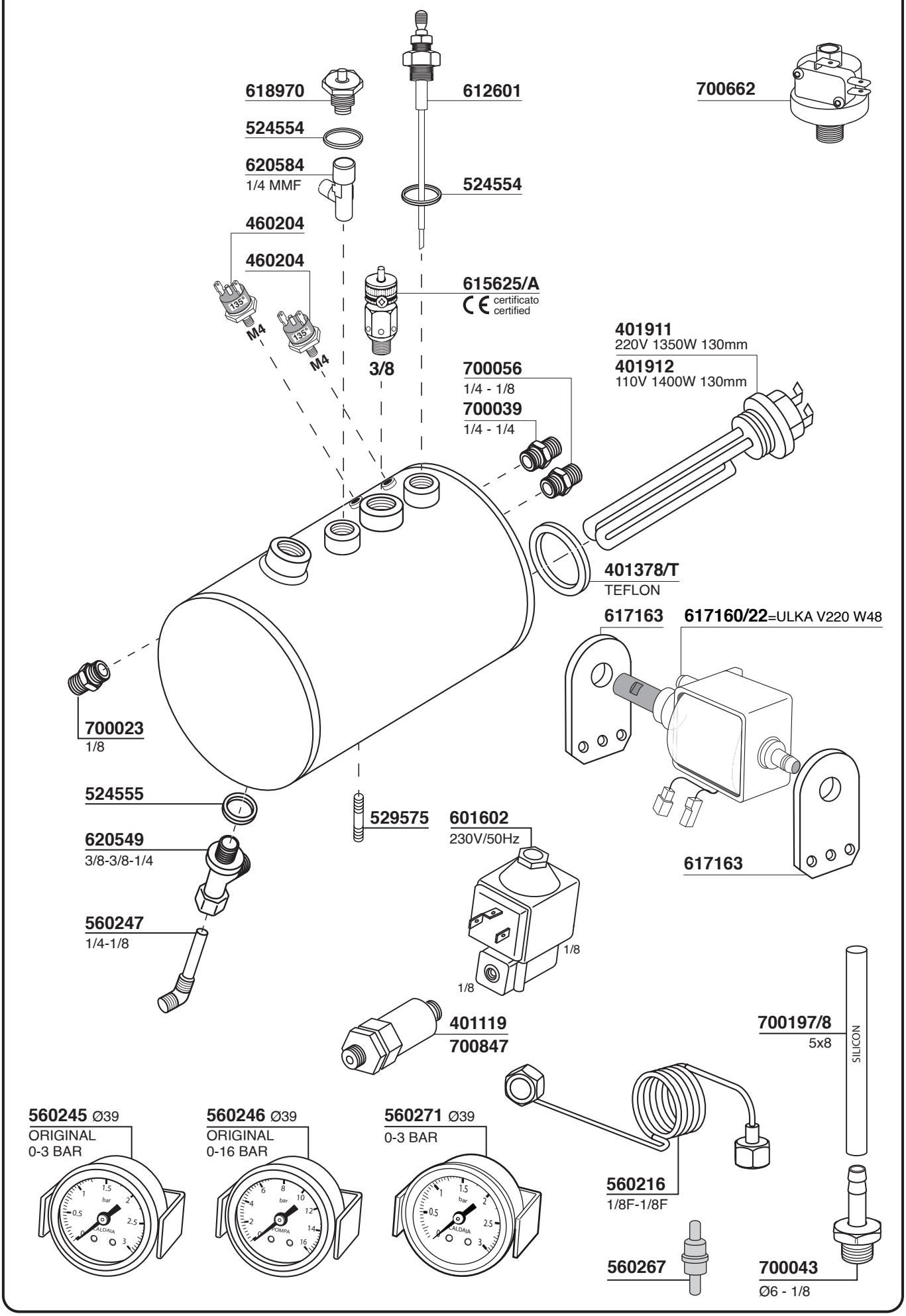

ECM DE

Tav. 08

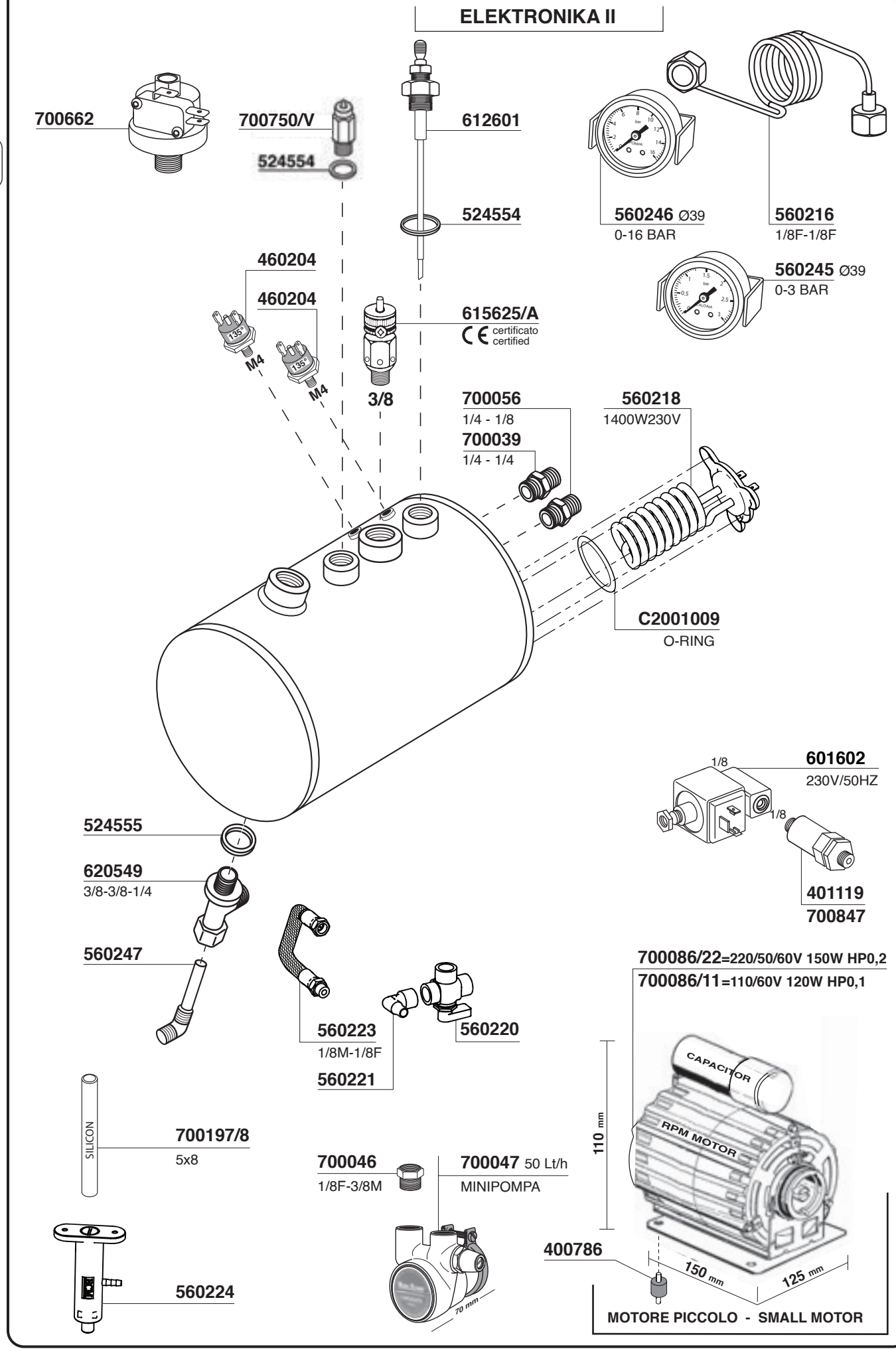
ELEKTRONIKA II
700662
700750/V
524554
612601
524554
560246 Ø39
0-16 BAR
560216
1/8F-1/8F
560245 Ø39
0-3 BAR
460204
460204
M4
M4
135°
615625/A
certificato
certified
3/8
700056
1/4 - 1/8
700039
1/4 - 1/4
560218
1400W230V
C2001009
O-RING
601602
230V/50HZ
1/8
1/8
401119
700847
524555
620549
3/8-3/8-1/4
560247
560223
1/8M-1/8F
560221
560220
700086/22=220/50/60V 150W HP0,2
700086/11=110/60V 120W HP0,1
CAPACITOR
RPM MOTOR
110 mm
150 mm
125 mm
SILICON
700197/8
5x8
700046
1/8F-3/8M
700047 50 Lt/h
MINIPOMPA
70 mm
400786
560224
MOTORE PICCOLO - SMALL MOTOR

SYNCHRONIKA - TECNIKA IV
MECHANIKA IV - ELEKTRONIKA II

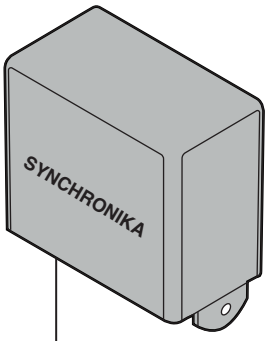

560226= 220V-240V
560227= 115V

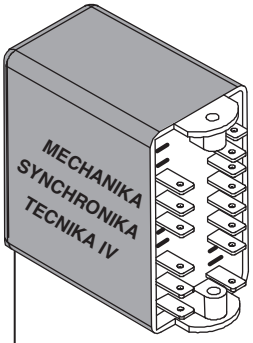

560228= 240V
GICAR CODE 9.9.36.12G

560229= 115V
GICAR CODE 9.9.36.04G

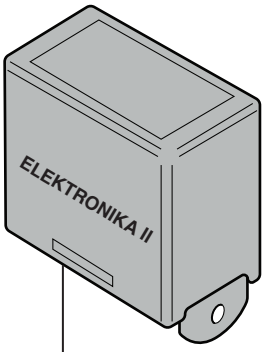

560249= 230V
GICAR CODE 9.5.37.10G

560250= 110V

8 PIN DOPPI
8 DOUBLE PINS

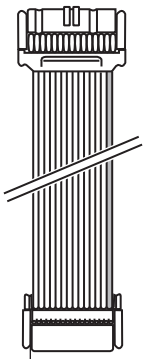

620707 800 mm
ELEKTRONIKA II

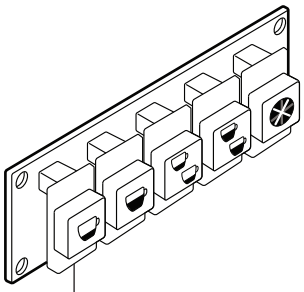

560248
ELEKTRONIKA II

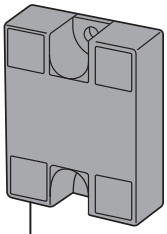

560230

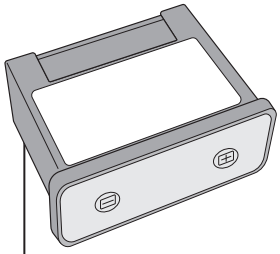

560233
SYNCHRONIKA
GICAR CODE 9.03.00.95G00

VERDE
GREEN

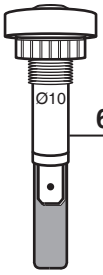

617733 220V

ROSSO
RED

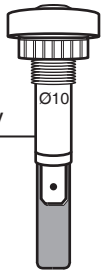

617734 220V

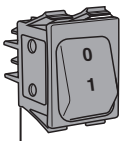

560232

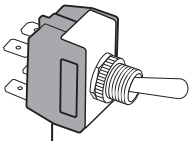

560231

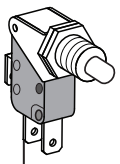

621271

ECM DE

Tav. 10

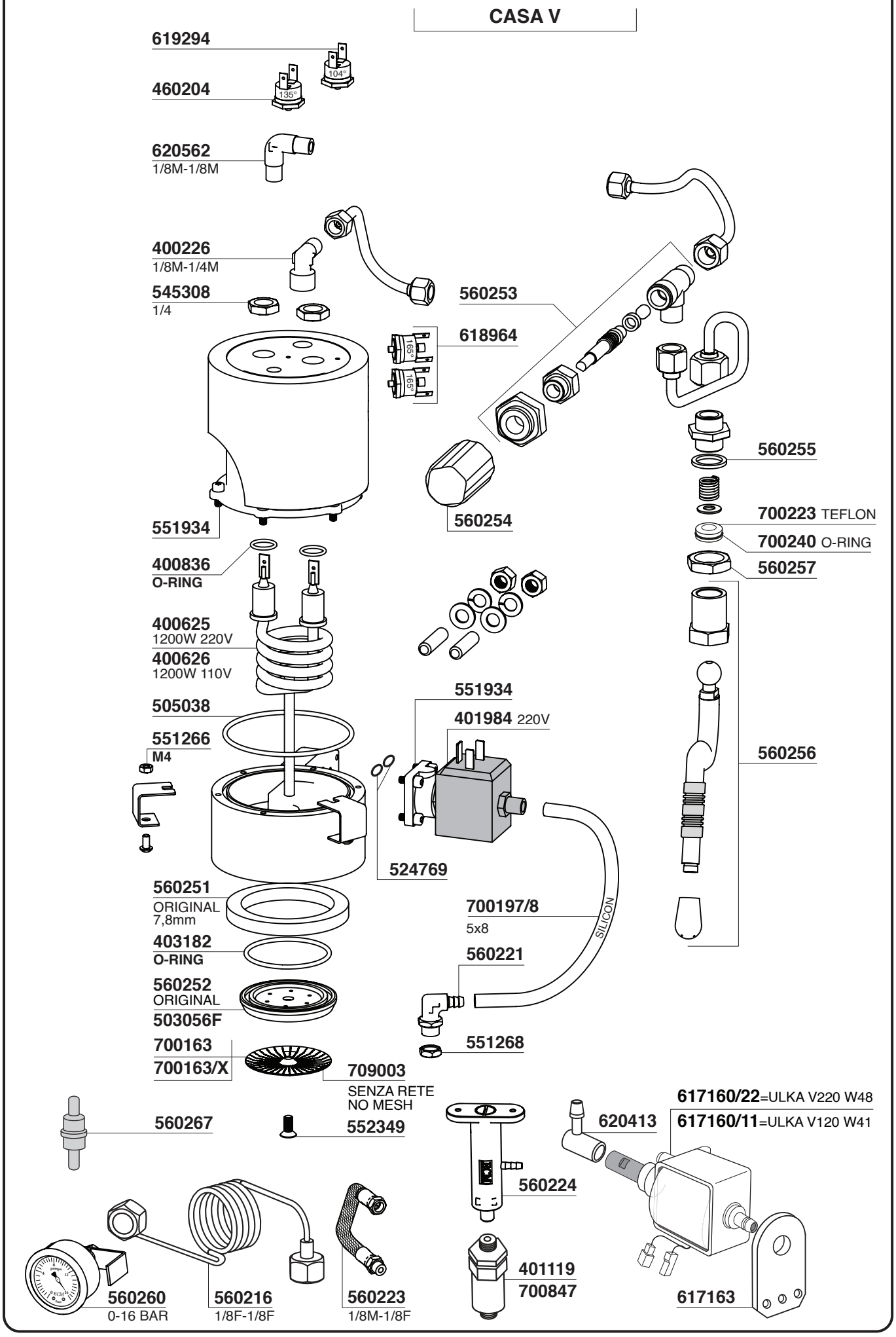
CASA V
619294
104°
460204
135°
620562
1/8M-1/8M
400226
1/8M-1/4M
545308
1/4
560253
618964
165°
165°
560255
560254
700223 TEFLON
700240 O-RING
560257
551934
400836
O-RING
400625
1200W 220V
400626
1200W 110V
505038
551266
M4
551934
401984 220V
560256
524769
560251
ORIGINAL
7,8mm
700197/8
5x8
SILICON
403182
O-RING
560221
560252
ORIGINAL
503056F
551268
700163
700163/X
709003
SENZA RETE
NO MESH
560267
552349
617160/22=ULKA V220 W48
617160/11=ULKA V120 W41
620413
560224
401119
700847
617163
560260
0-16 BAR
560216
1/8F-1/8F
560223
1/8M-1/8F

CASA V

514417 5gr
514418 6gr
526418 6gr
521834 6gr
521830 7gr
521835 7gr
521832 8gr
521833 7gr
MICROFORI
MICROHOLES

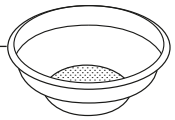

413706

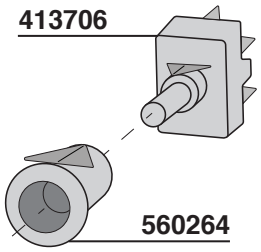

560264

560265

516575 12gr
521998 12gr
521994 14gr
521997 14gr
514419 14gr
ridgeless
526208 18gr
526757 21gr
300059 21gr
526758 24gr
521996 14gr
MICROFORI
MICROHOLES

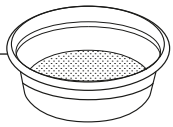

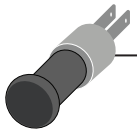

560262 220V
ORANGE

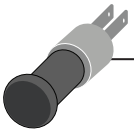

560263 220V
GREEN

521901
521902

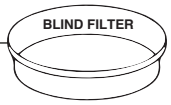

612143 Ø1,1 mm
612142 Ø1,2 mm

560261
ORIGINAL

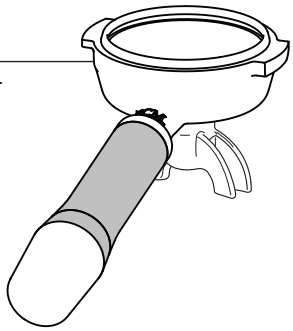

513744
PLASTIC

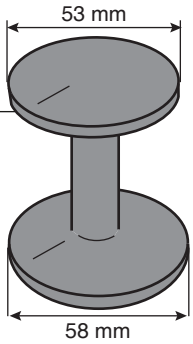

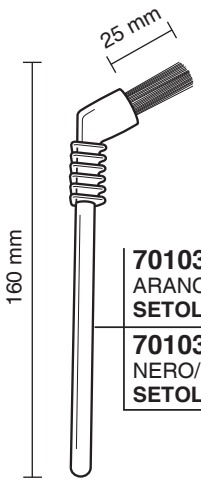

701038
ARANCIONE/ORANGE
SETOLE/BRISTLES Ø0,8mm

701038/N
NERO/BALCK
SETOLE/BRISTLES Ø0,8mm

300202 3/8

511673 3/8

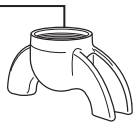

701046

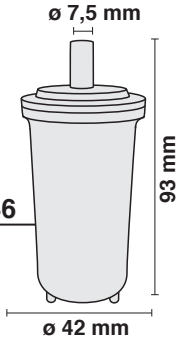

701047

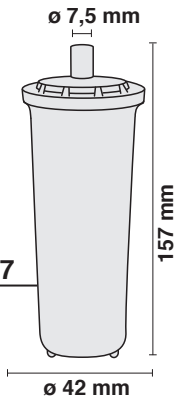

ELEKTRA

Tav. 01

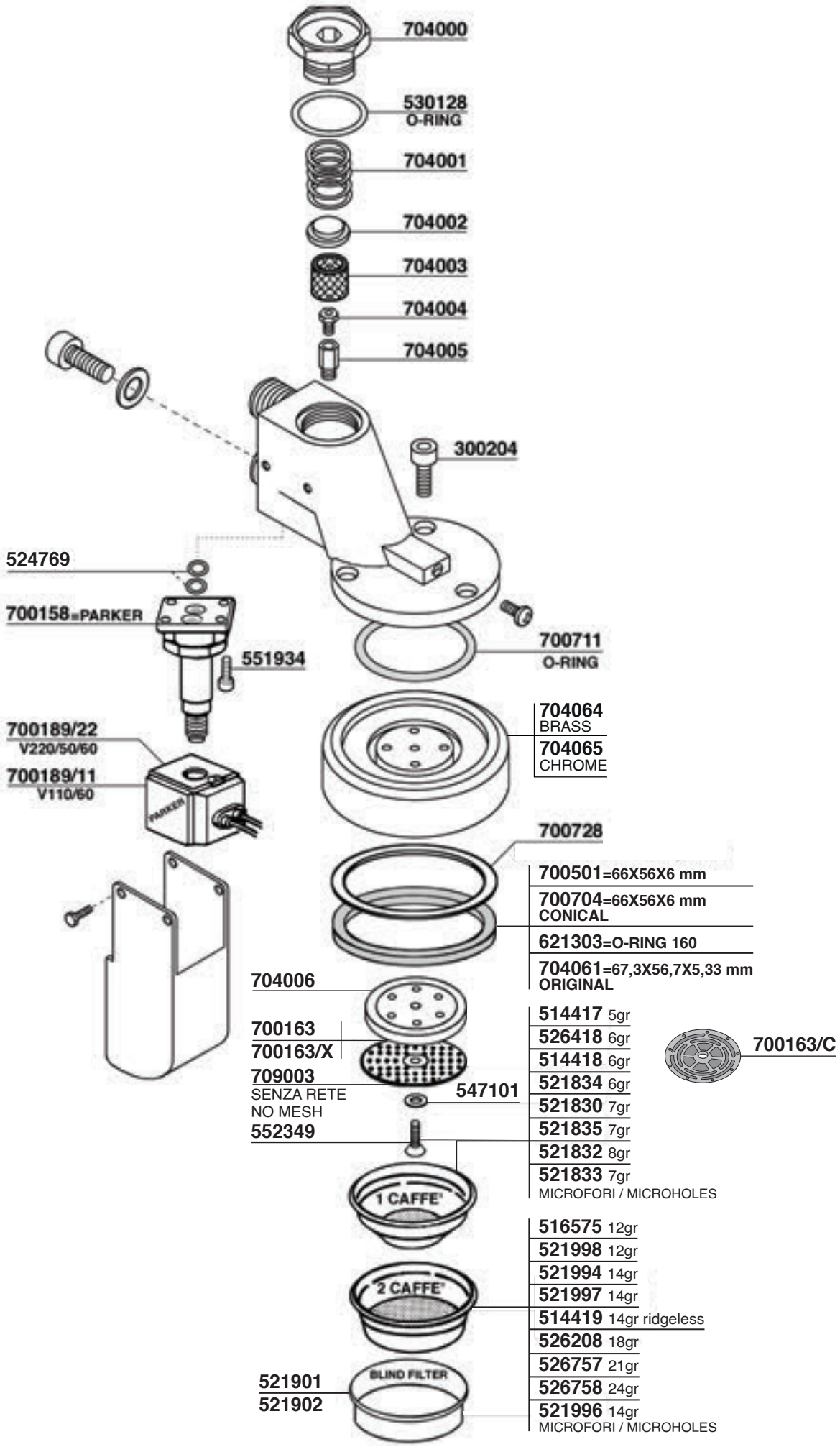

BARLUME

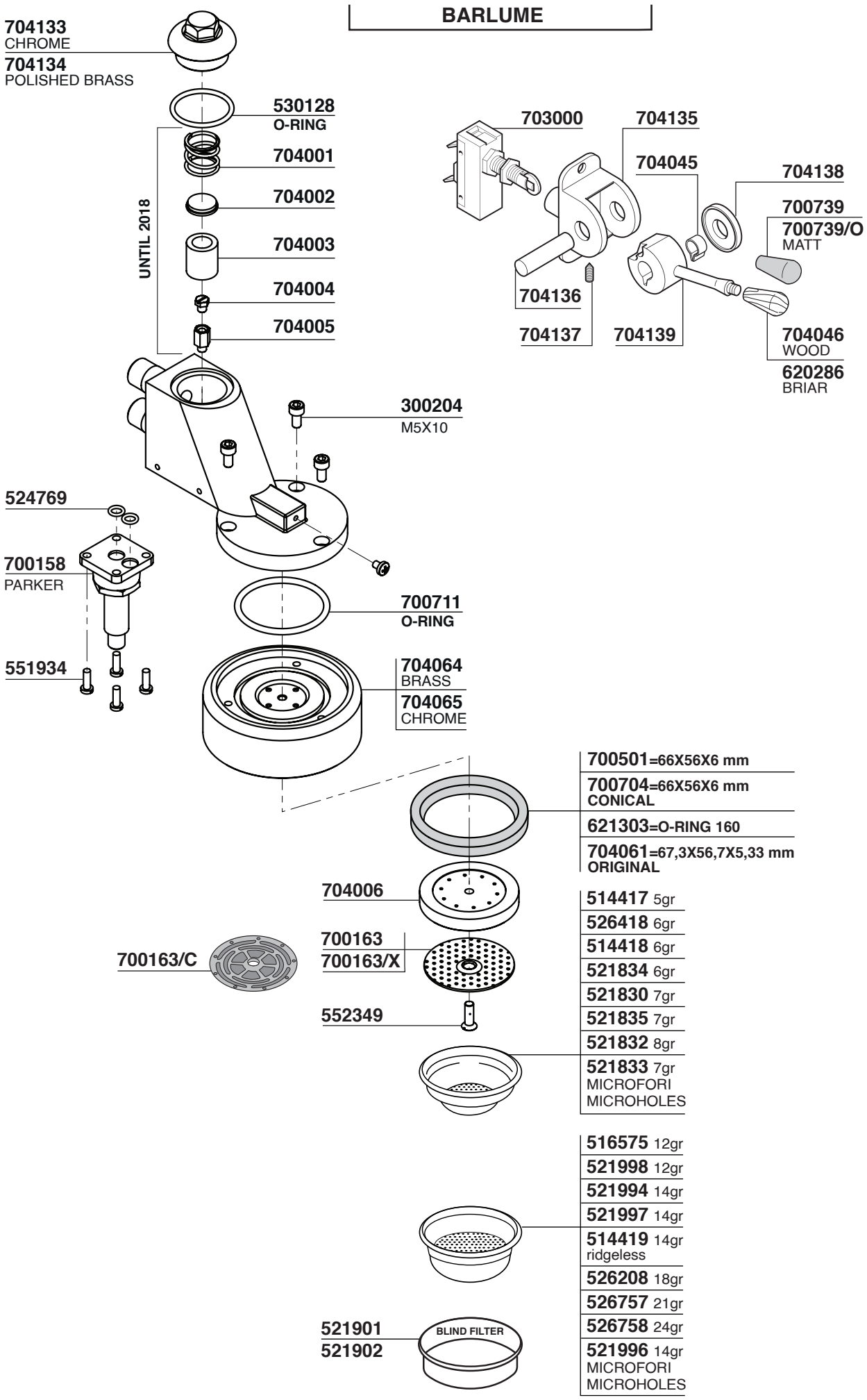
704133
CHROME
704134
POLISHED BRASS
530128
O-RING
704001
704002
704003
704004
704005
UNTIL 2018
703000
704135
704045
704138
700739
700739/O
MATT
704136
704137
704139
704046
WOOD
620286
BRIAR
300204
M5X10
524769
700158
PARKER
551934
700711
O-RING
704064
BRASS
704065
CHROME
700501=66X56X6 mm
700704=66X56X6 mm
CONICAL
621303=O-RING 160
704061=67,3X56,7X5,33 mm
ORIGINAL
704006
700163
700163/X
700163/C
552349
514417 5gr
526418 6gr
514418 6gr
521834 6gr
521830 7gr
521835 7gr
521832 8gr
521833 7gr
MICROFORI
MICROHOLES
516575 12gr
521998 12gr
521994 14gr
521997 14gr
514419 14gr
ridgeless
526208 18gr
526757 21gr
526758 24gr
521996 14gr
MICROFORI
MICROHOLES
521901
521902
BLIND FILTER

ELEKTRA

Tav.03

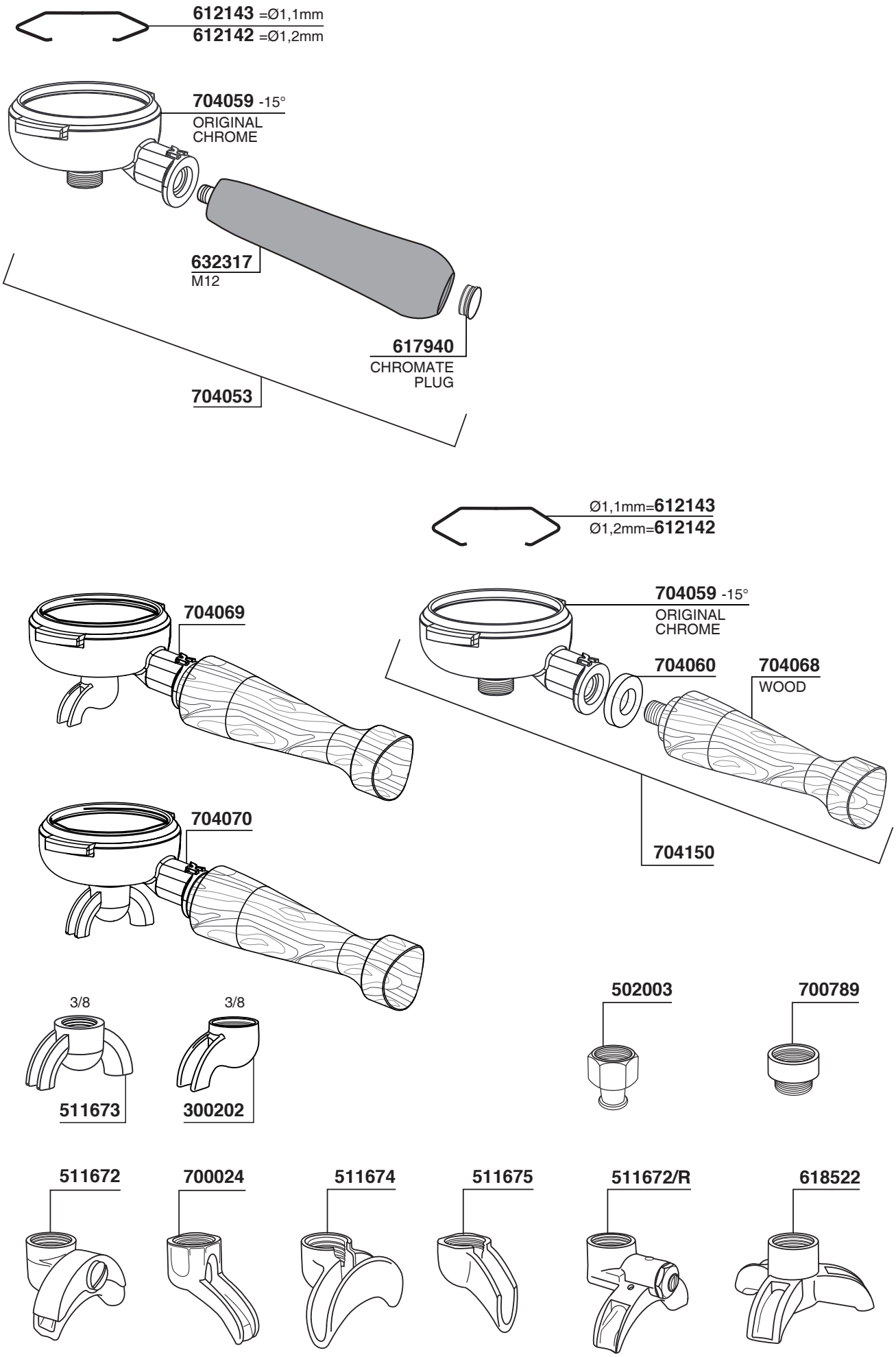

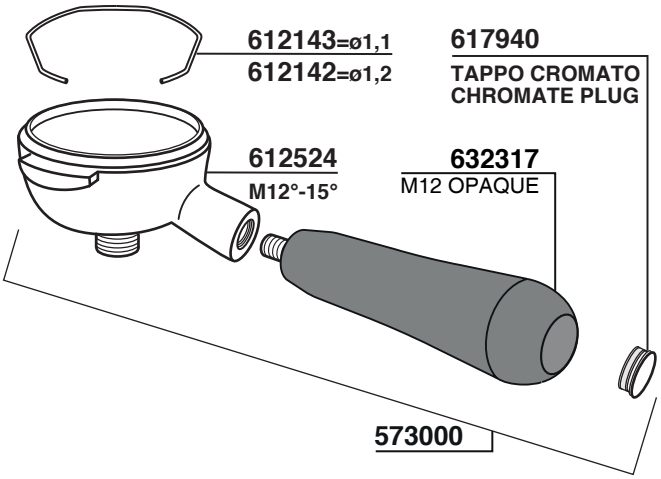
612143=ø1,1
612142=ø1,2
617940
TAPPO CROMATO
CHROMATE PLUG
612524
M12°-15°
632317
M12 OPAQUE
573000

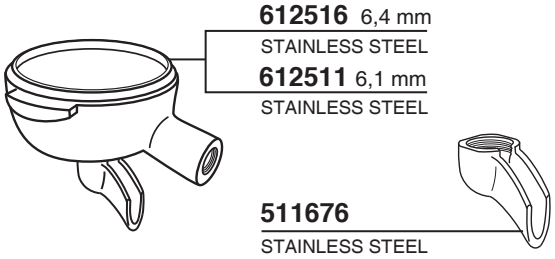
612516 6,4 mm
STAINLESS STEEL
612511 6,1 mm
STAINLESS STEEL
511676
STAINLESS STEEL

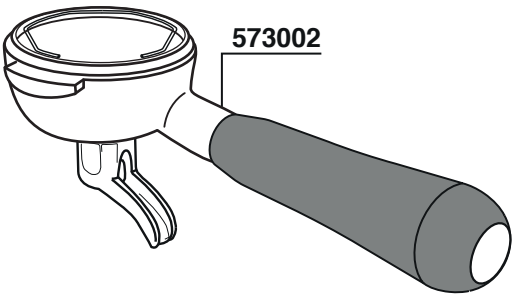
573002

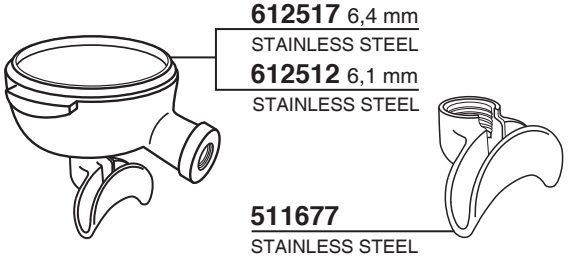
612517 6,4 mm
STAINLESS STEEL
612512 6,1 mm
STAINLESS STEEL
511677
STAINLESS STEEL

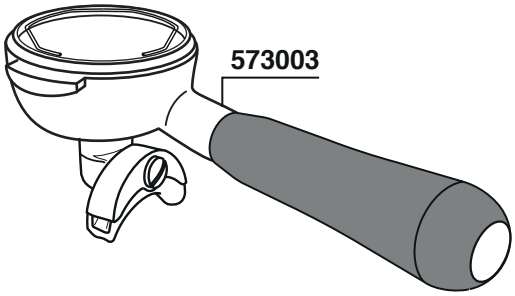
573003

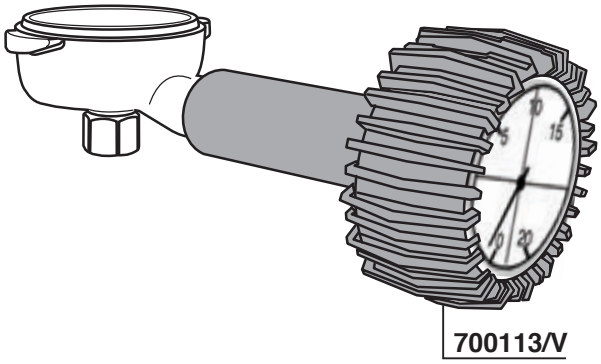
700113/V

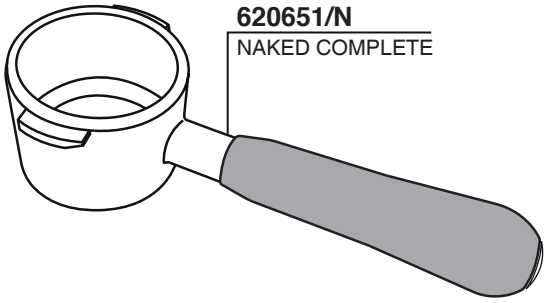
620651/N
NAKED COMPLETE

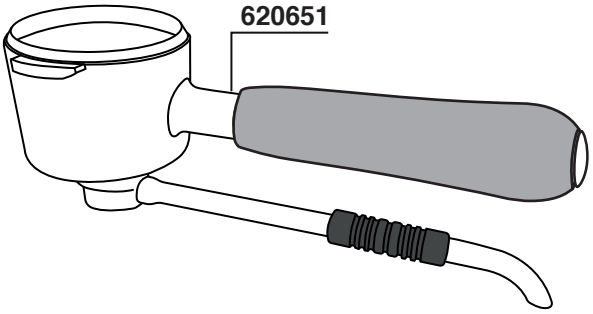
620651

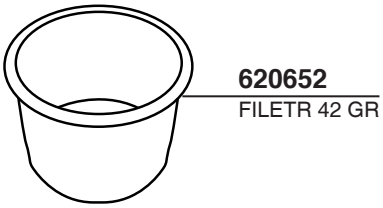
620652
FILETR 42 GR

ELEKTRA

Tav. 05

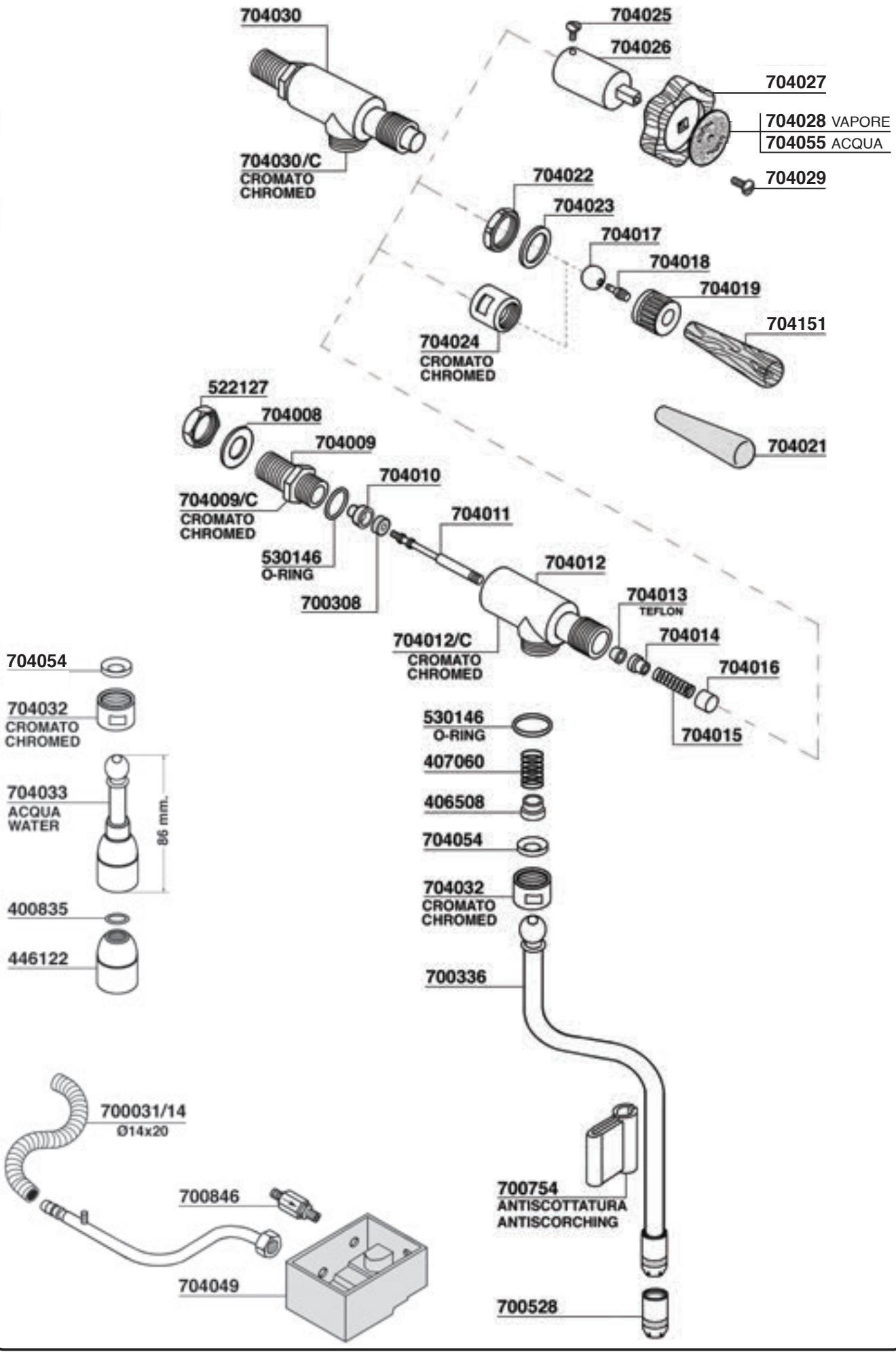

ELEKTRA

Tav.06

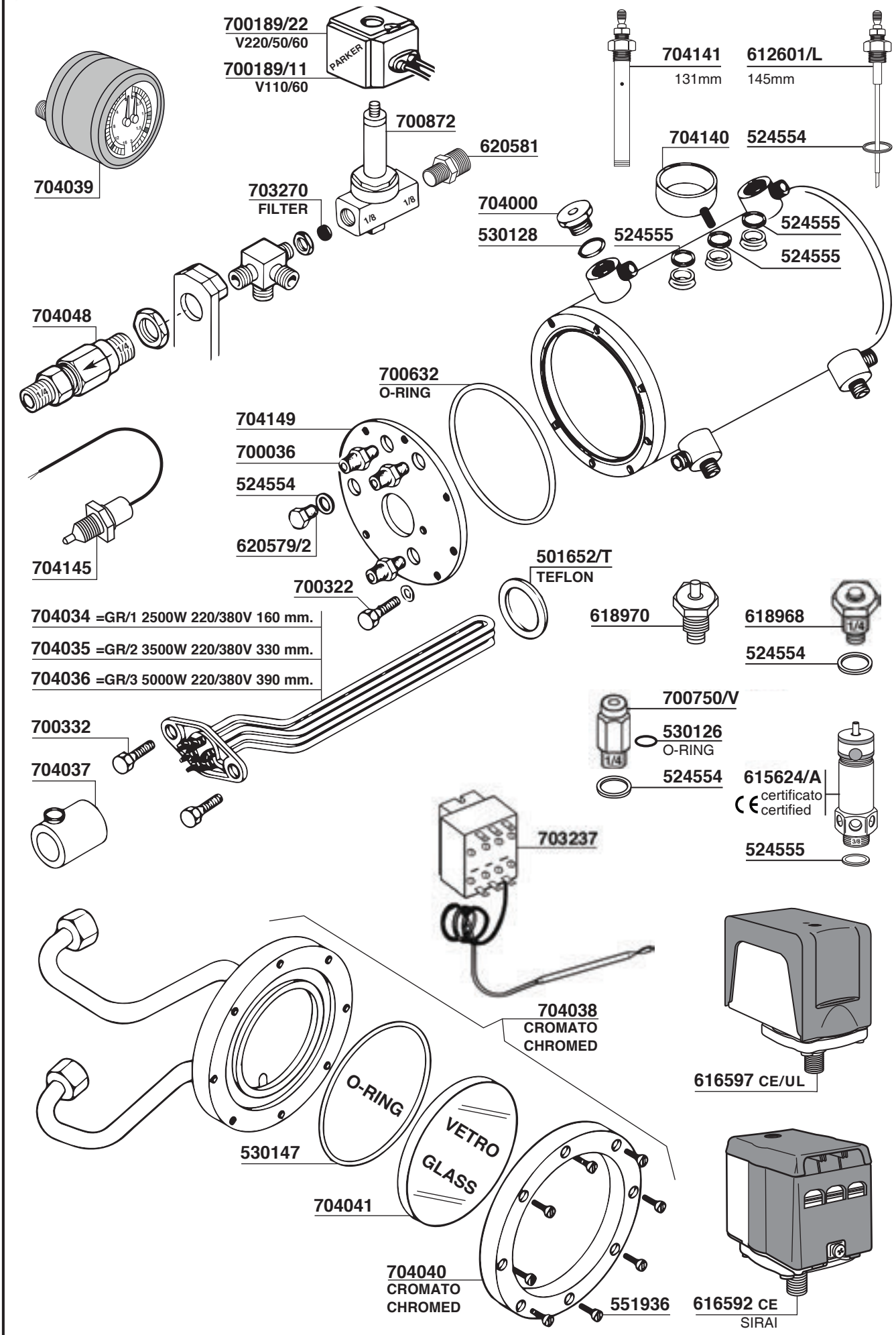

ELEKTRA

Tav. 07

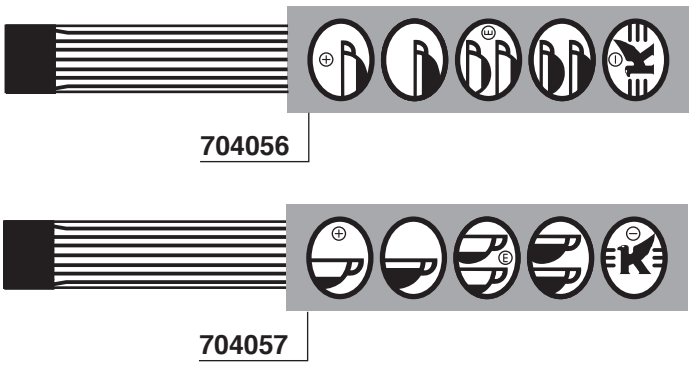

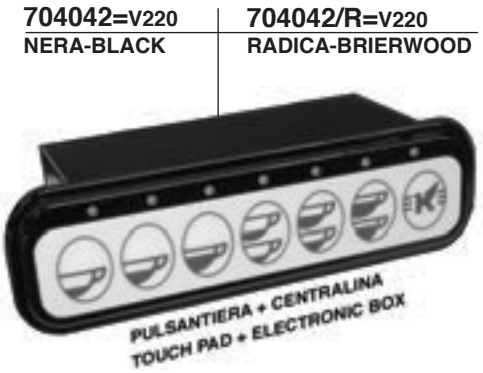

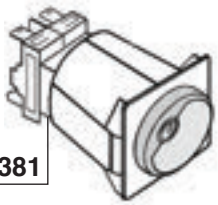

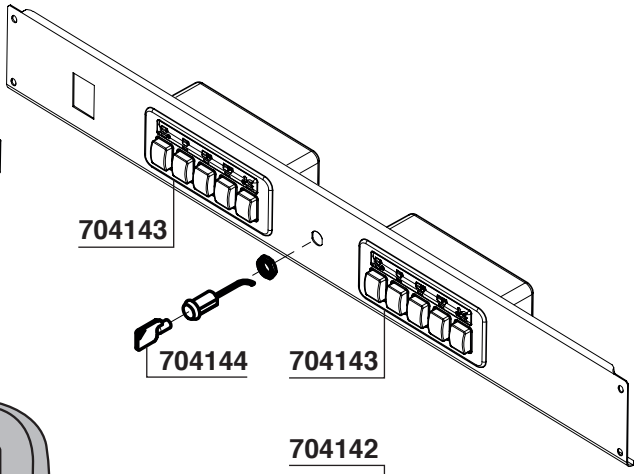

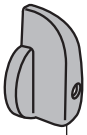

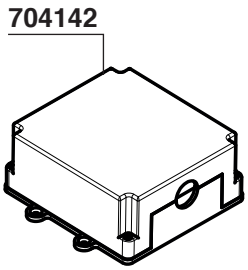

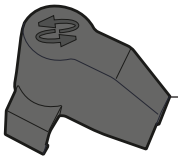

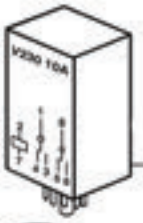

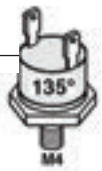

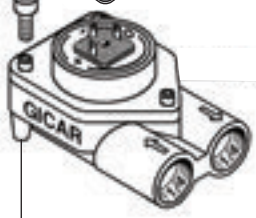

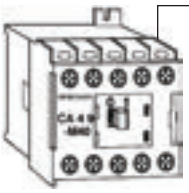

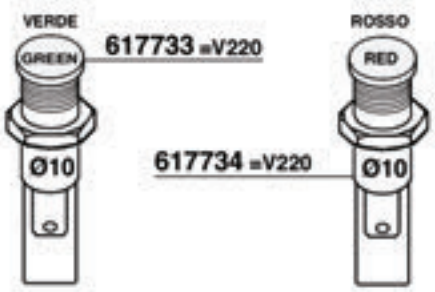

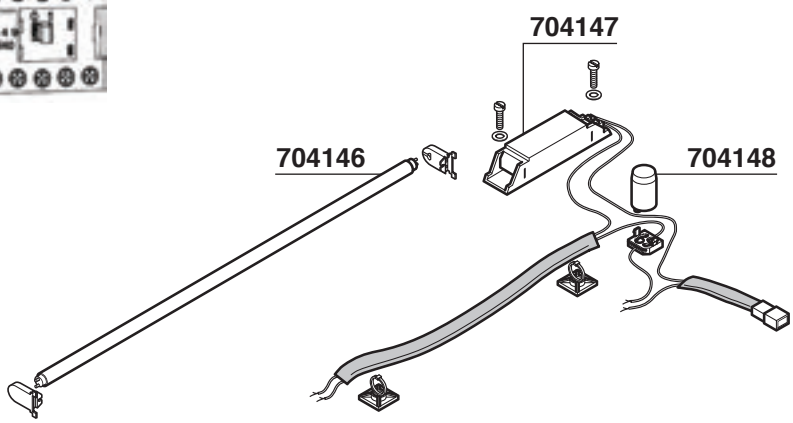

MICROCASA SEMIAUTOMATICA

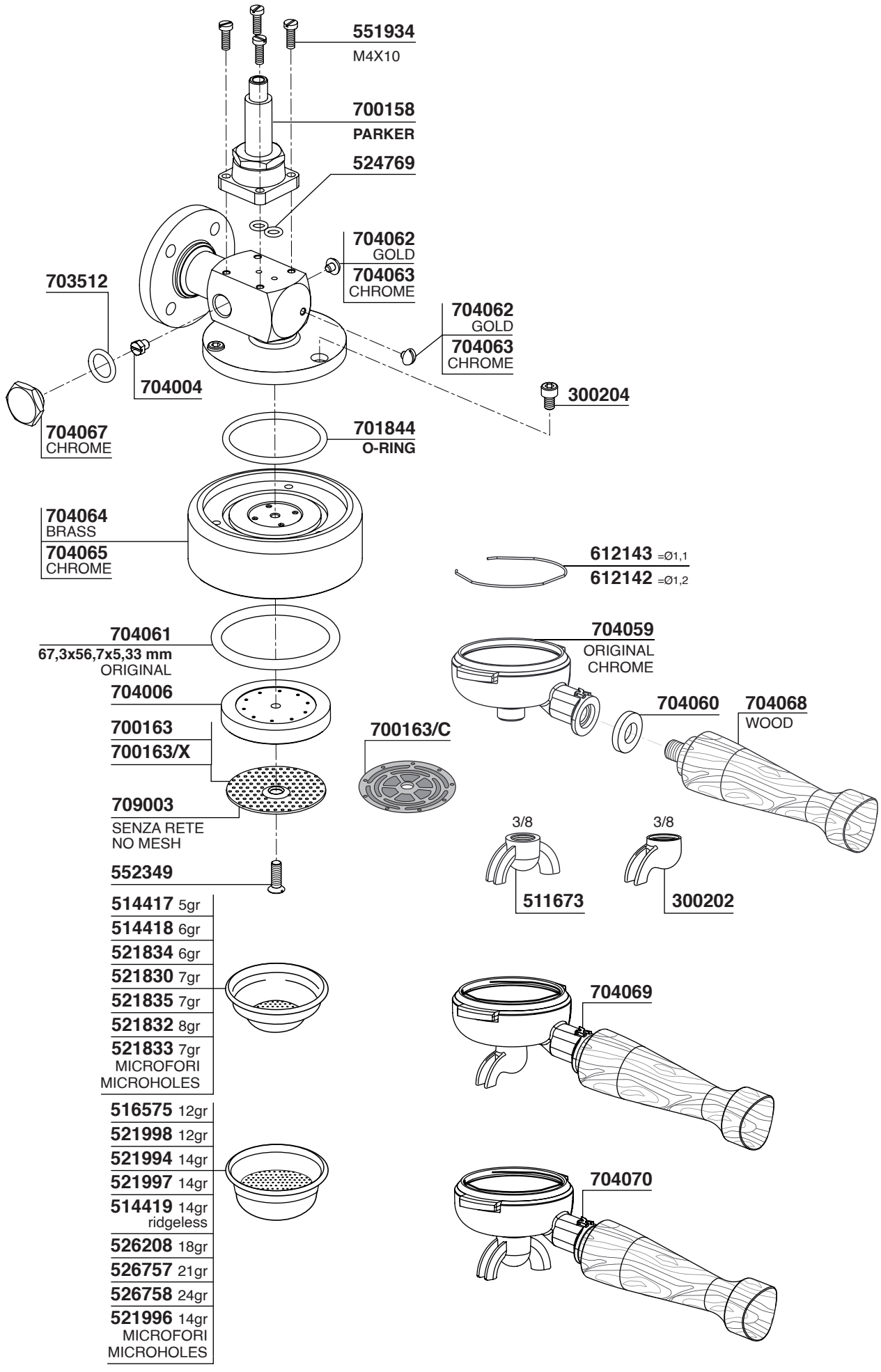

ELEKTRA

Tav. 09

MICROCASA SEMIAUTOMATICA

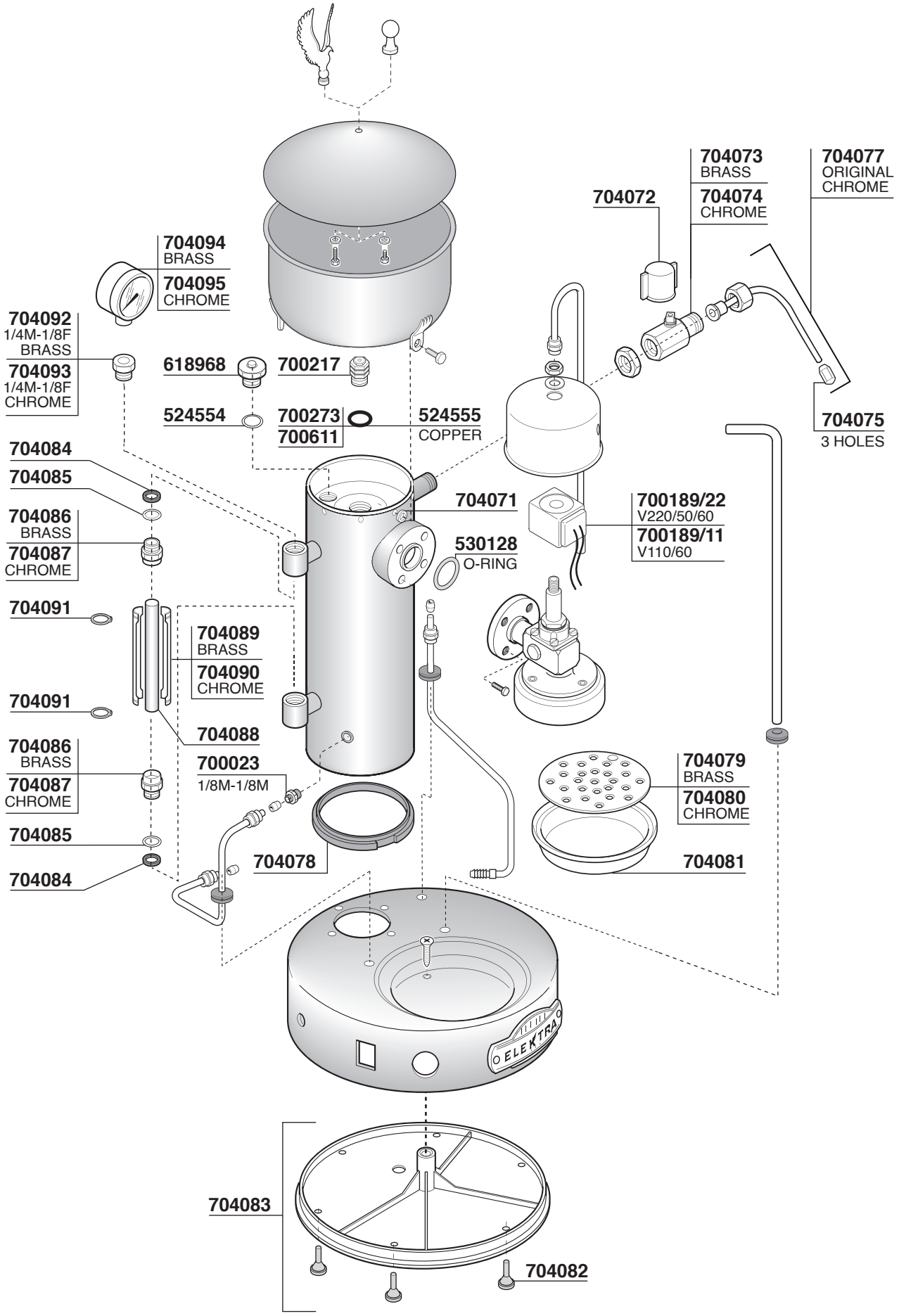

ELEKTRA

Tav. 10

MICROCASA SEMIAUTOMATICA

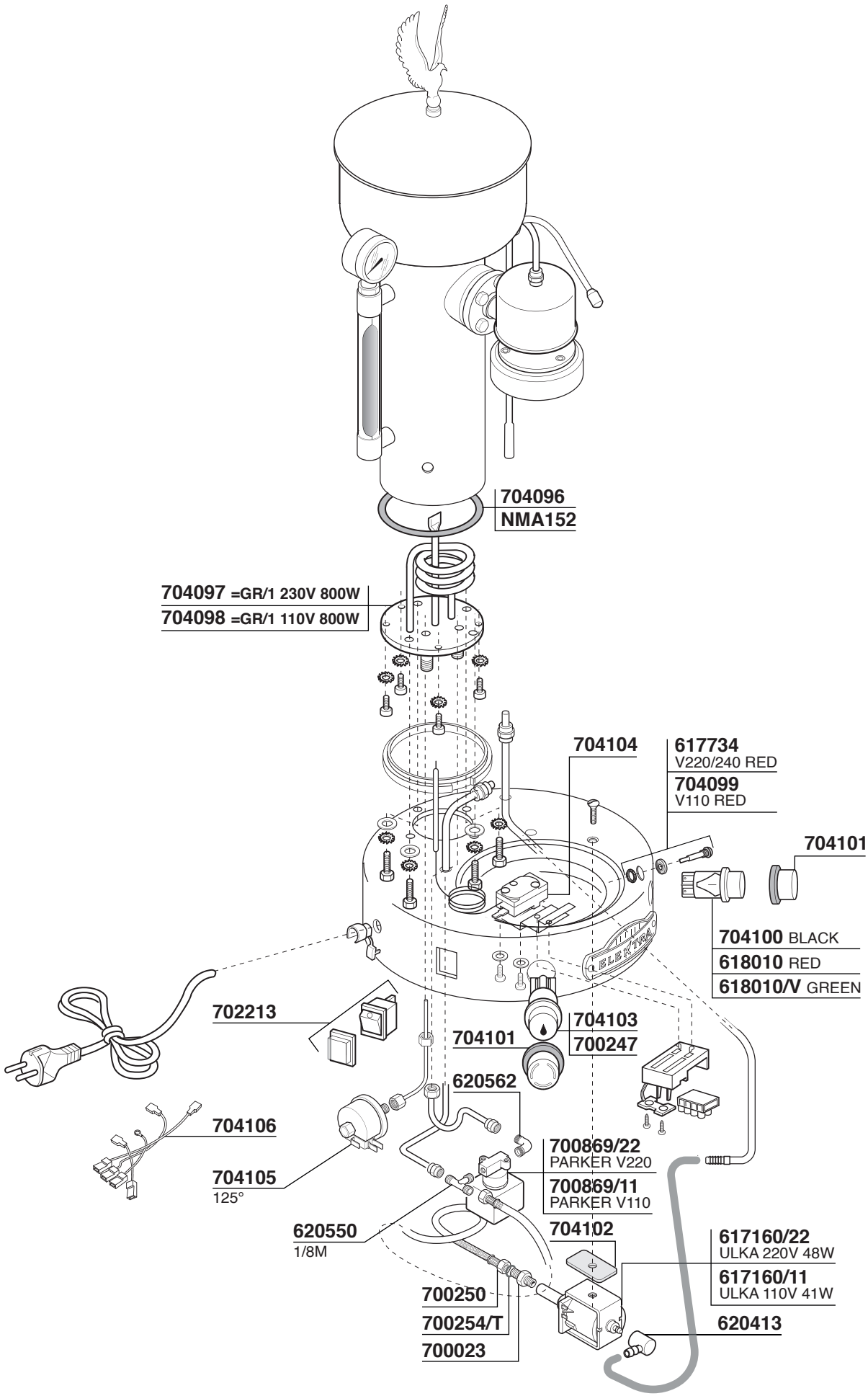

ELEKTRA

Tav. 11

MICROCASA LEVA

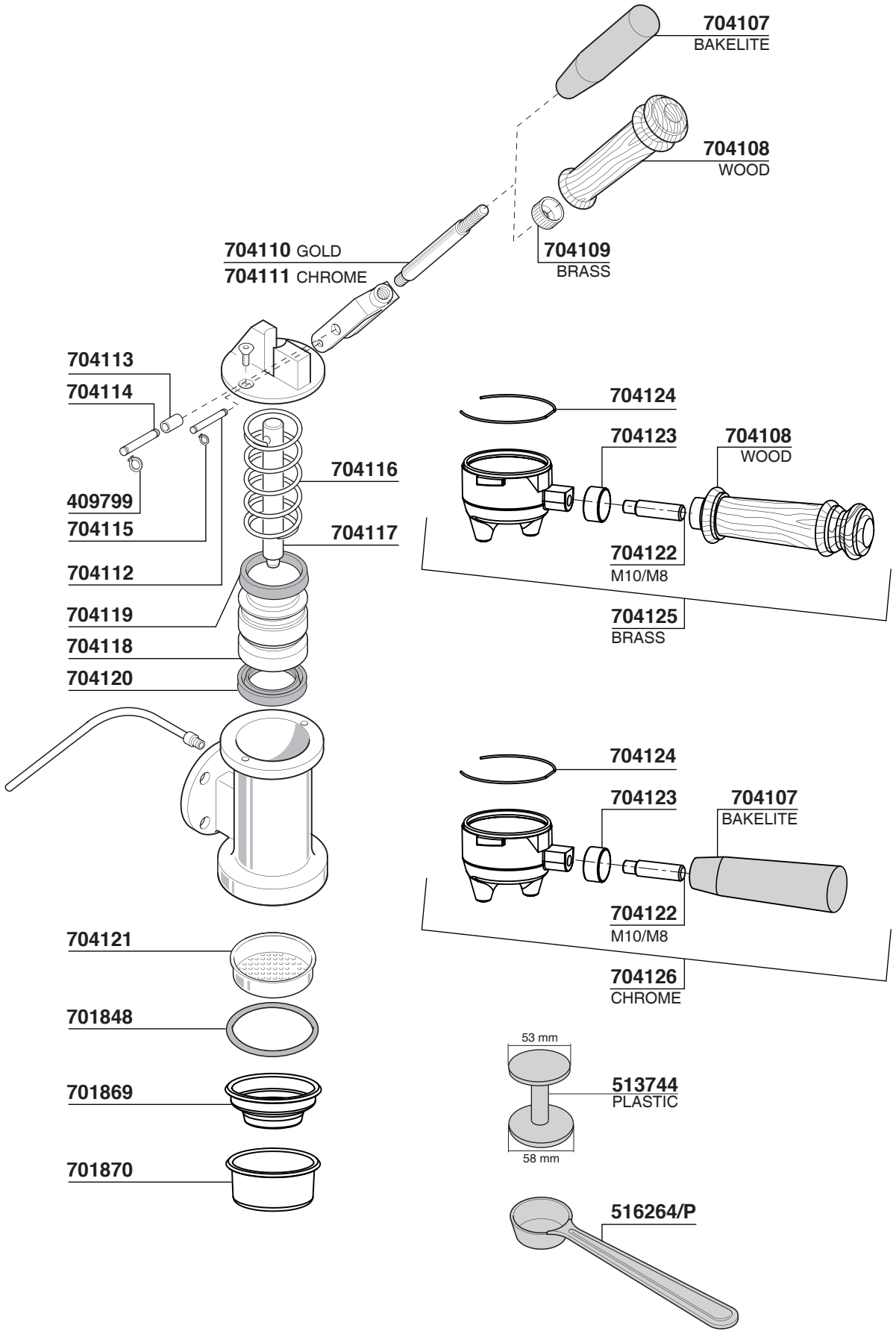

ELEKTRA

Tav. 12

MICROCASA LEVA

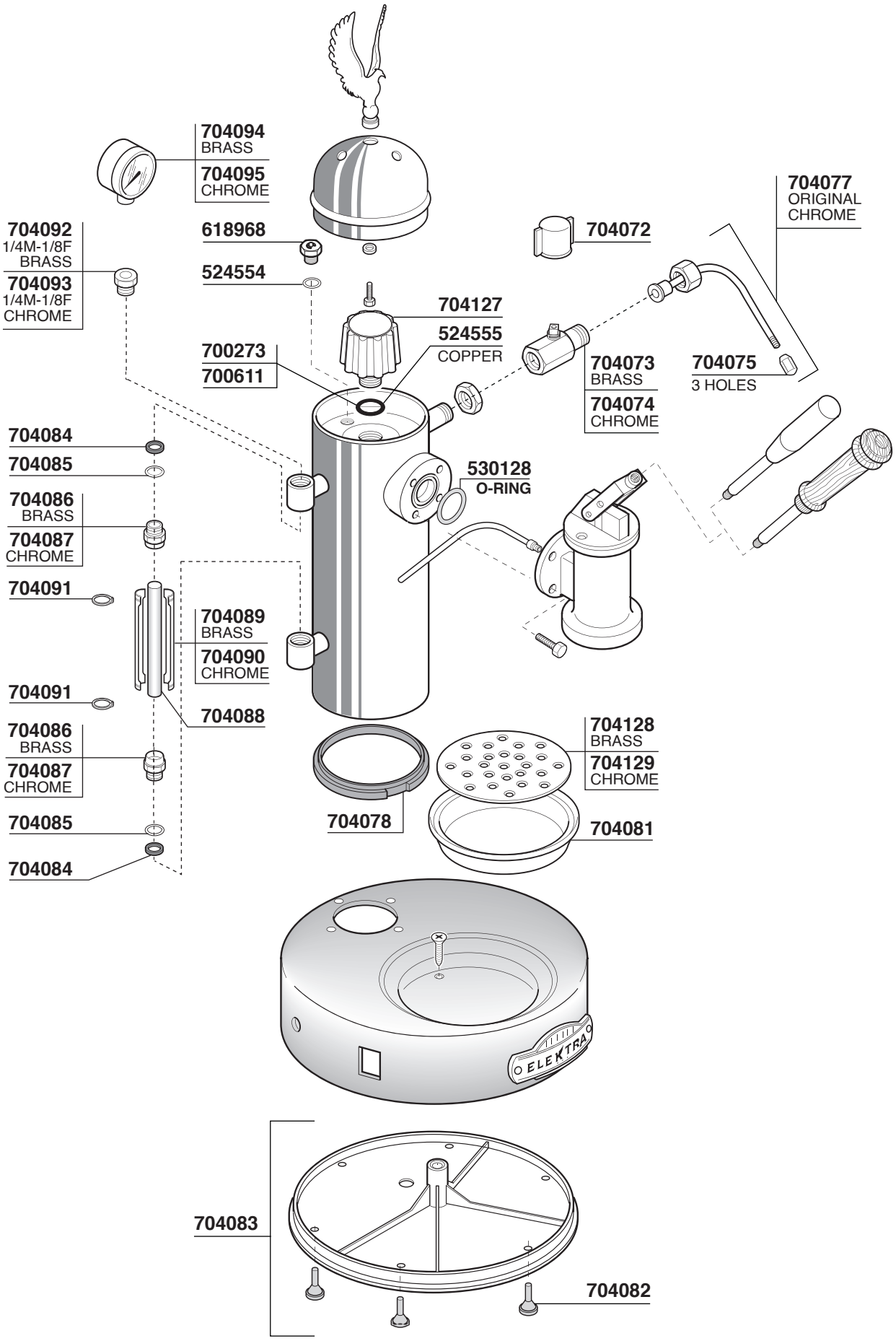

ELEKTRA

Tav. 13

MICROCASA LEVA

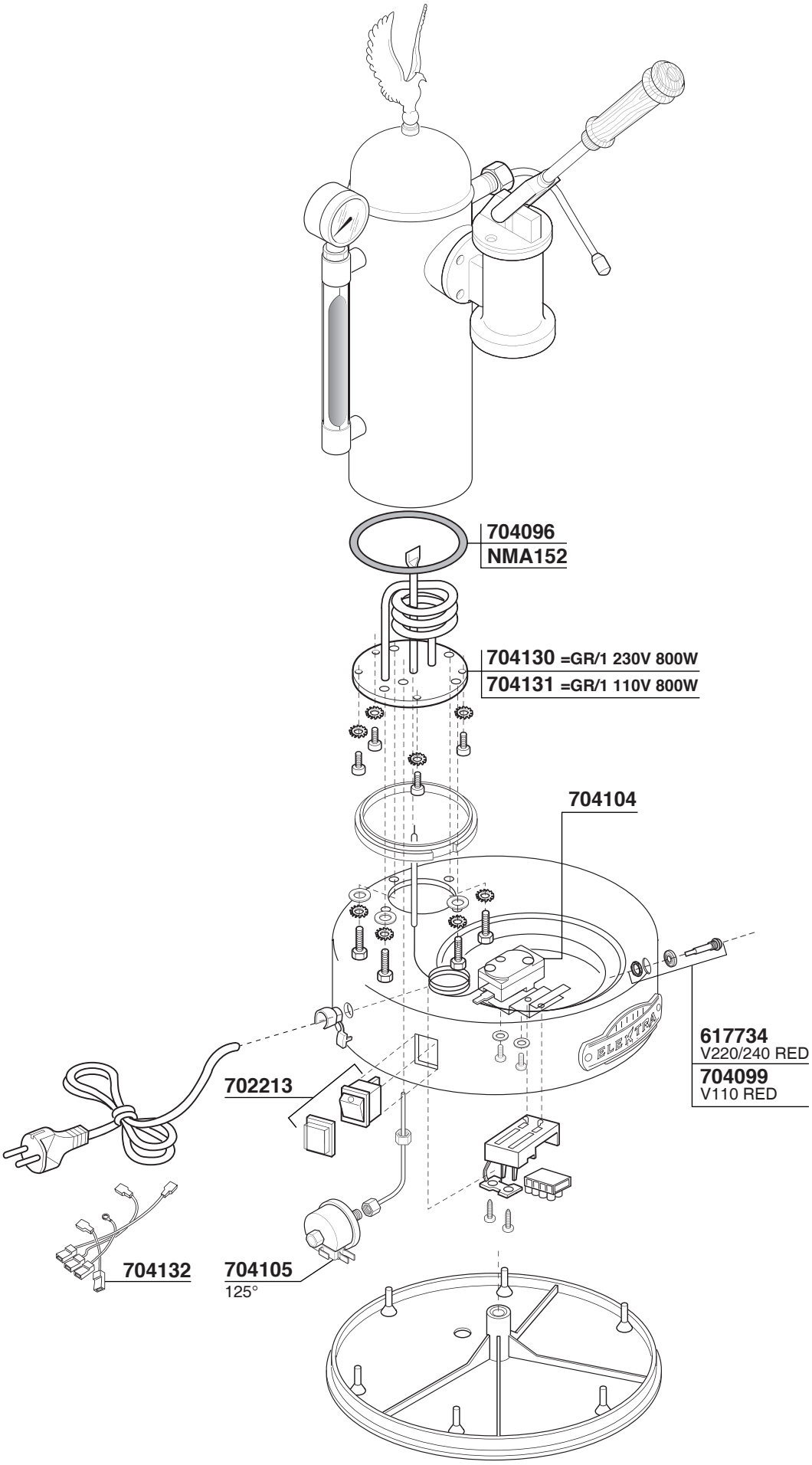

EXPOBAR

Tav.01

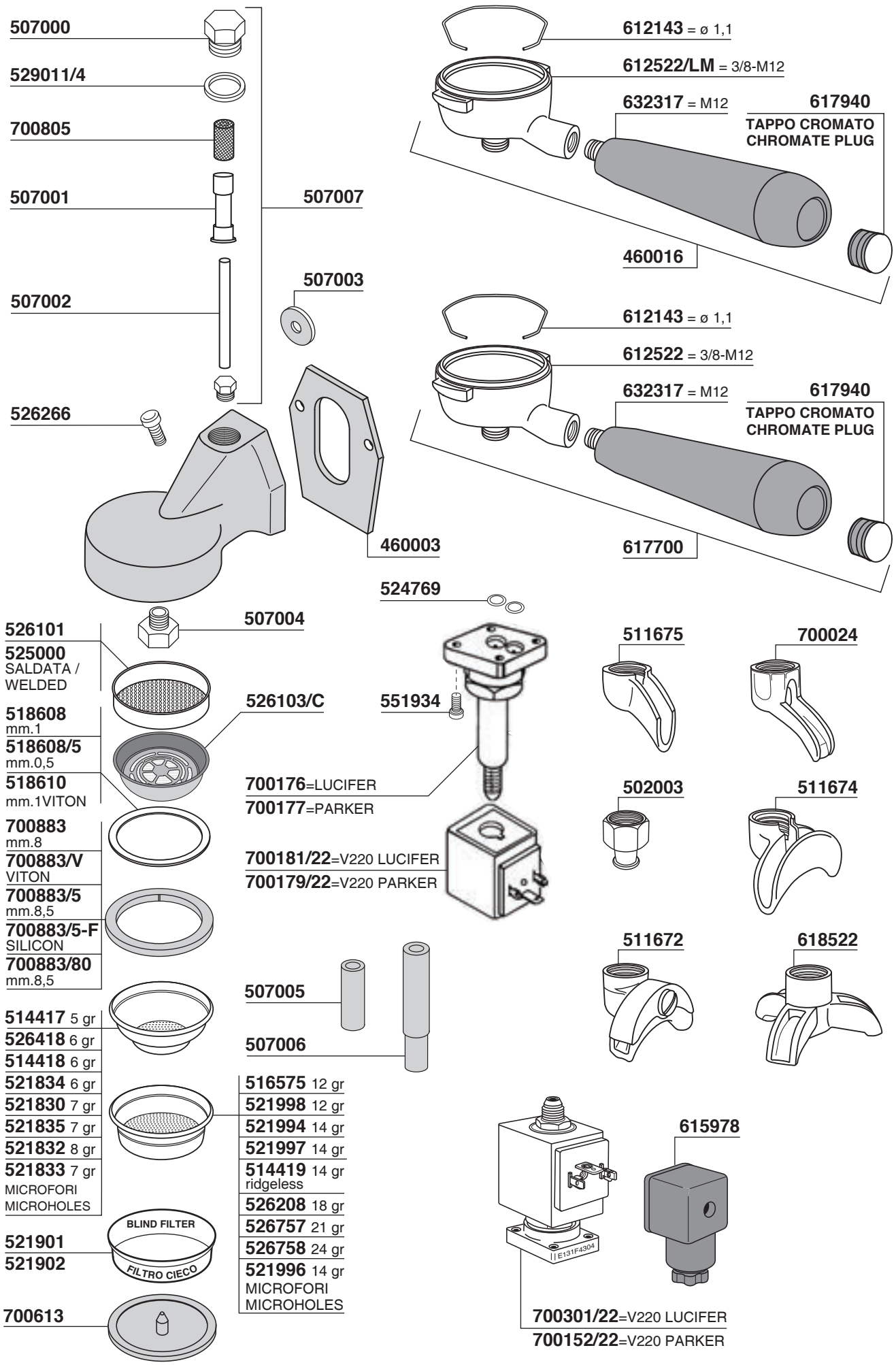

EXPOBAR

Tav. 02

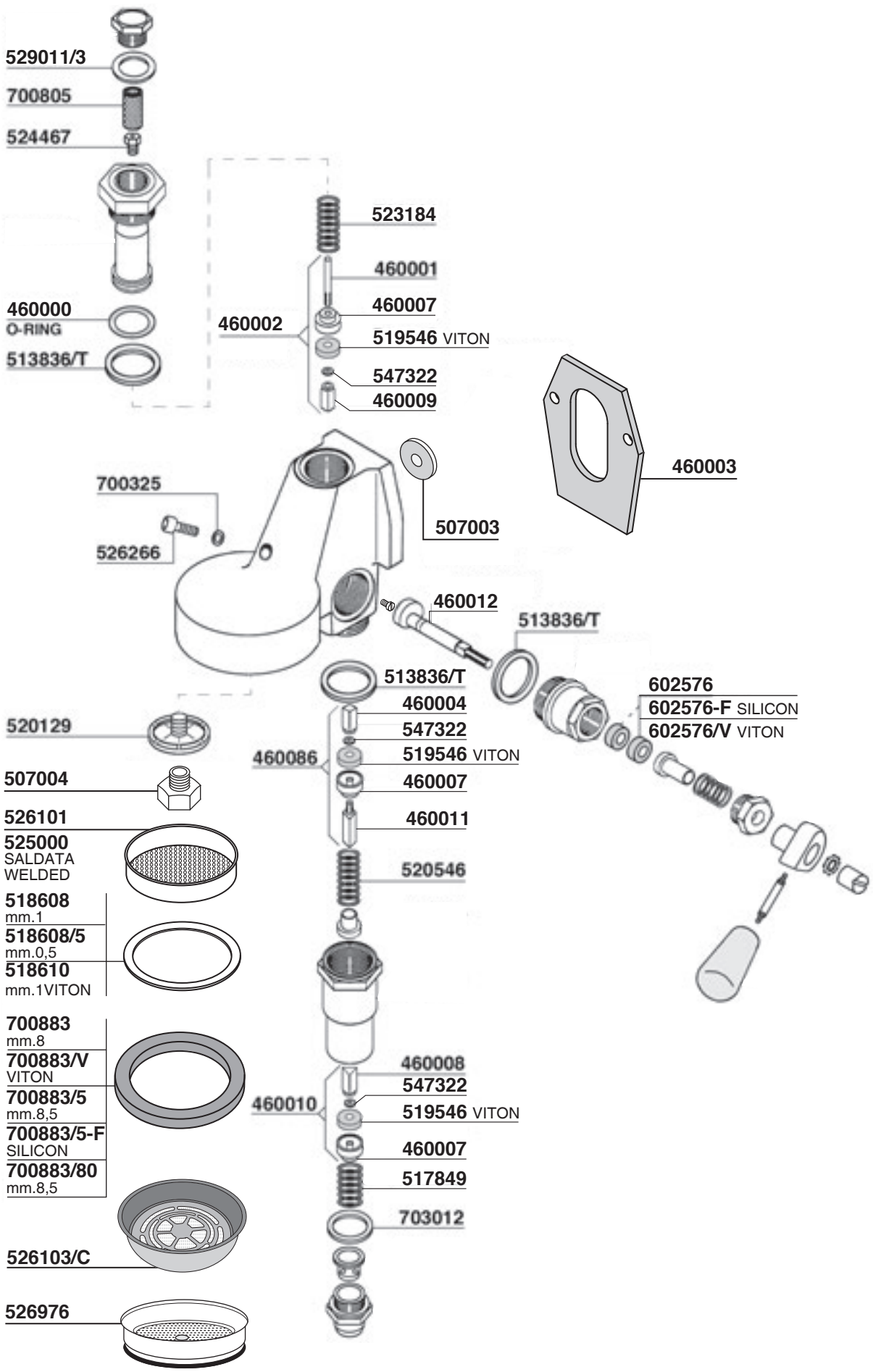

EXPOBAR

Tav.03

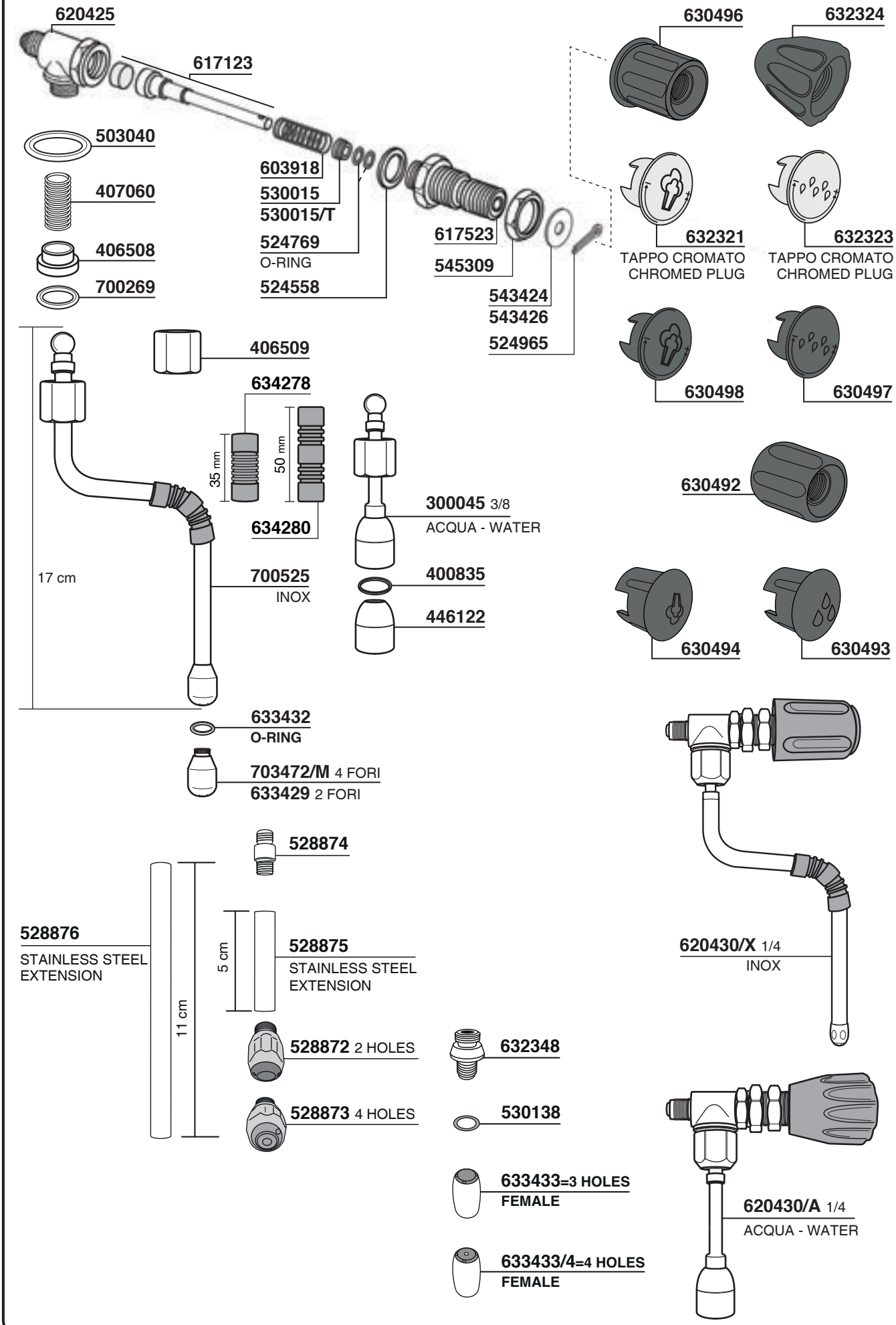

EXPOBAR

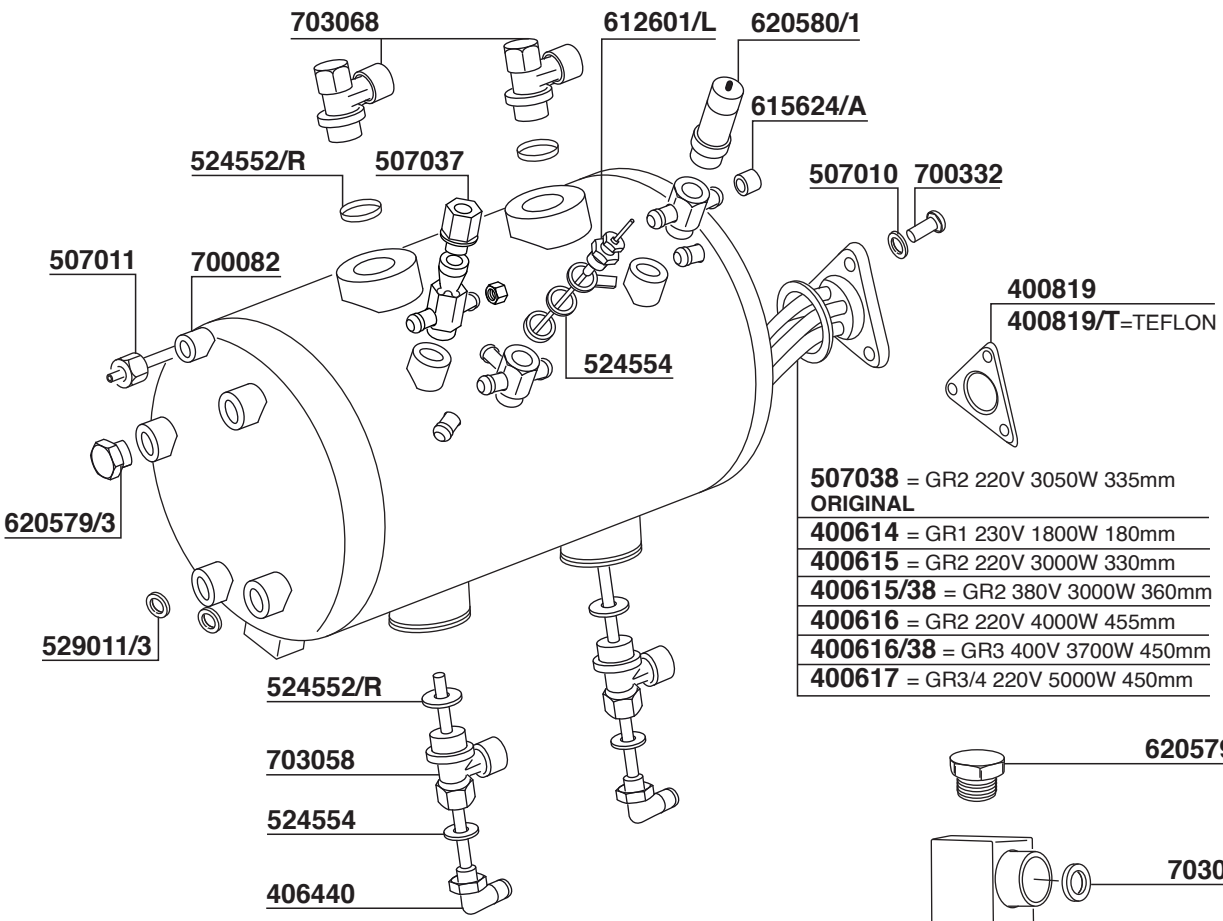
703068
612601/L
620580/1
615624/A
524552/R
507037
507010
700332
507011
700082
400819
400819/T=TEFLON
524554
620579/3
529011/3
507038 = GR2 220V 3050W 335mm
ORIGINAL
400614 = GR1 230V 1800W 180mm
400615 = GR2 220V 3000W 330mm
400615/38 = GR2 380V 3000W 360mm
400616 = GR2 220V 4000W 455mm
400616/38 = GR3 400V 3700W 450mm
400617 = GR3/4 220V 5000W 450mm
524552/R
703058
524554
406440

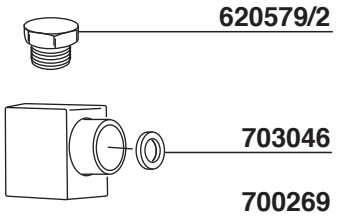
620579/2
703046
700269

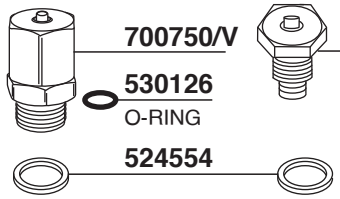
700750/V
530126
O-RING
618968
618970
524554

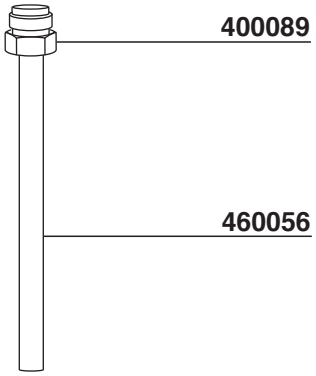
400089
460056

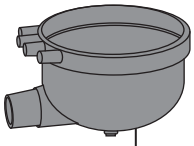
507012

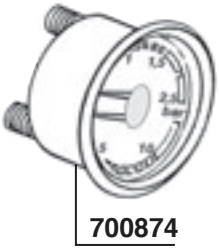
700874

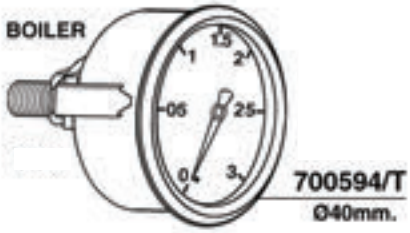
BOILER
700594/T
Ø40mm.

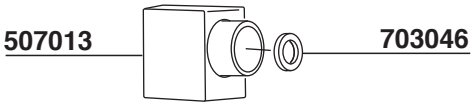
400089
700269
507013
703046

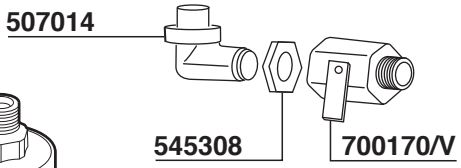
507014
545308
700170/V

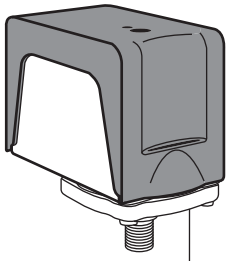
616597 CE/UL
SIRAI

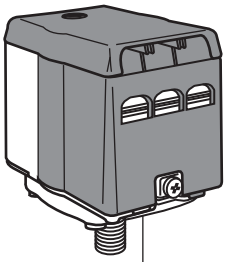
616592 CE
SIRAI

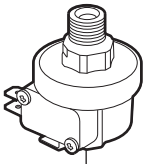
507034
16A 250V 1BAR 1/4

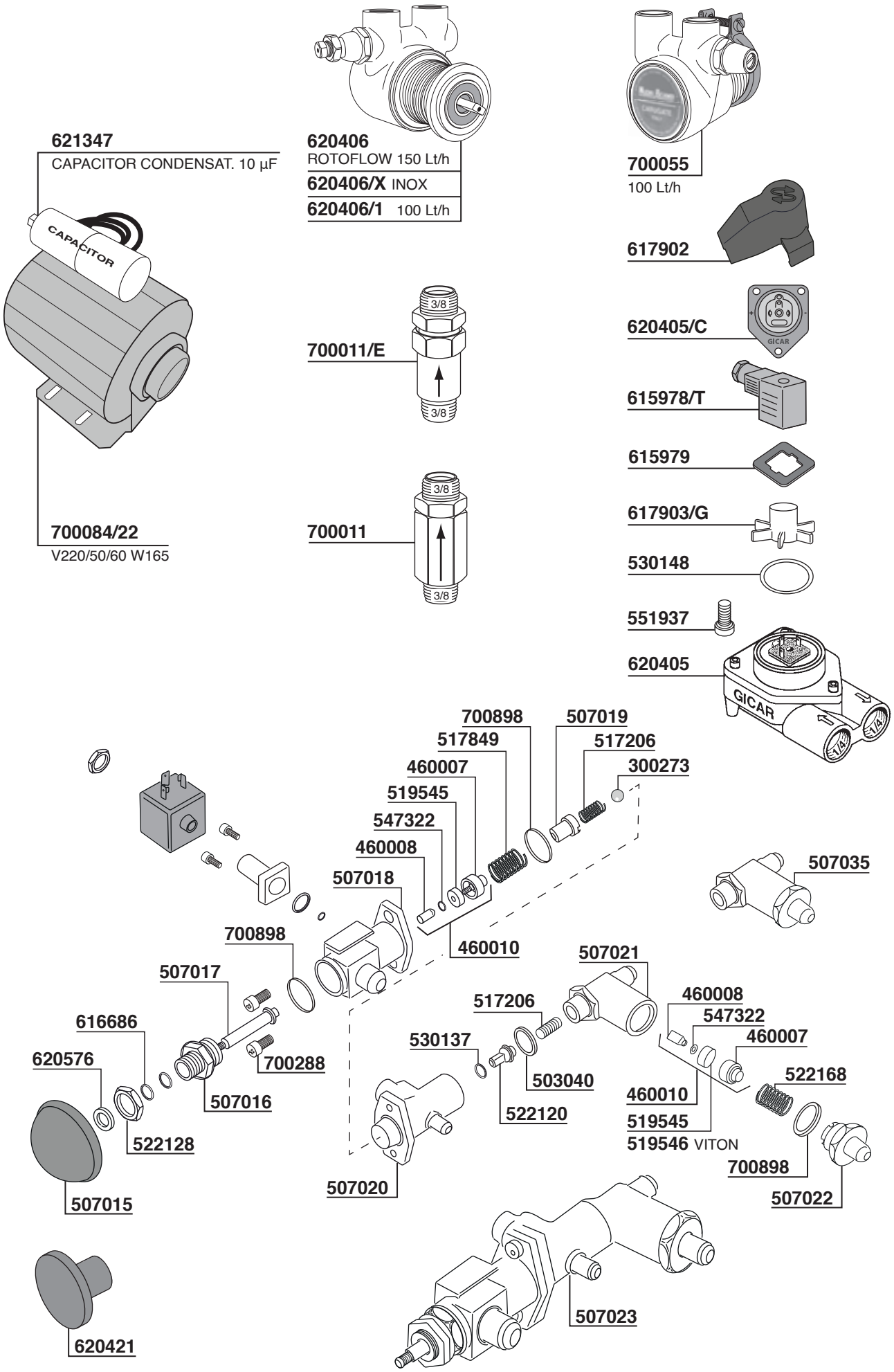
621347
CAPACITOR CONDENSAT. 10 µF
CAPACITOR
700084/22
V220/50/60 W165
620406
ROTOFLOW 150 Lt/h
620406/X INOX
620406/1 100 Lt/h
700011/E
3/8
700011
700055
100 Lt/h
617902
620405/C
GICAR
615978/T
615979
617903/G
530148
551937
620405
GICAR
1/4
700898
507019
517849
517206
460007
300273
519545
547322
460008
507018
507035
700898
460010
507021
507017
517206
460008
547322
616686
530137
460007
620576
700288
503040
522168
507016
460010
522120
519545
522128
519546 VITON
700898
507015
507020
507022
507023
620421

EXPOBAR

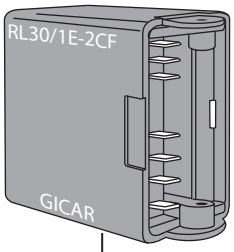

700737 220V
AUTOLIVELLO - AUTOFUEL
GICAR CODE 9.1.40.71G

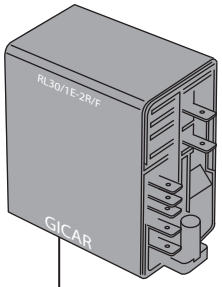

507031 240V
GICAR CODE 9.1.42.33G
507031/11 115V
GICAR CODE 9.1.42.36G

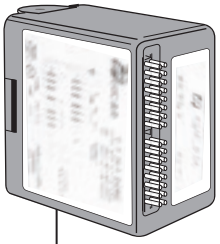

507028

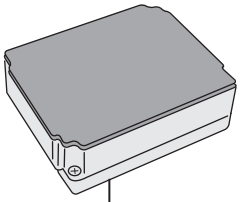

507029 230V
GICAR CODE 9.5.32.01G01

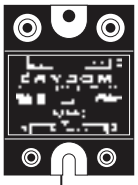

703296

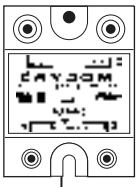

507042

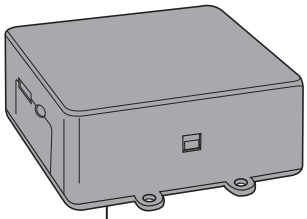

507036 230V
GICAR CODE 9.5.25.50G01

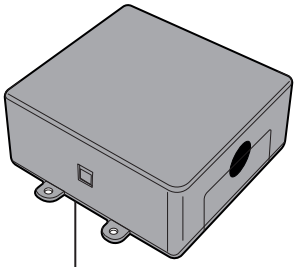

507040
GICAR CODE 9.5.25.27G

700749
20A 0-1

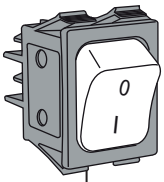

700429

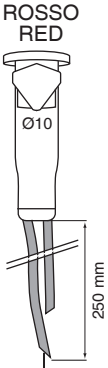

615511/22 220V

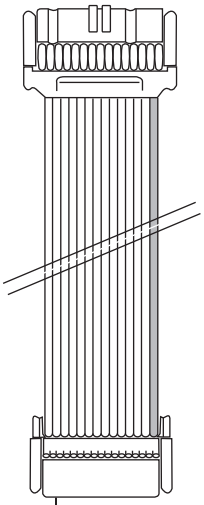

620706 600 mm - 16 PIN
620707 800 mm - 16 PIN

507008
GICAR CODE 8.9.46.46

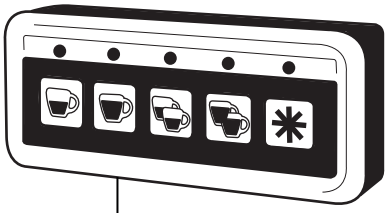

507024
GICAR CODE 9.9.09.51G

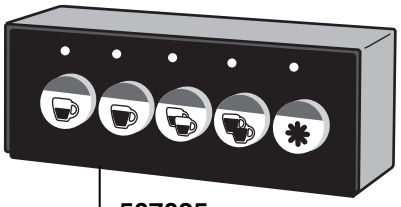

507025
GICAR CODE 9.9.07.28G

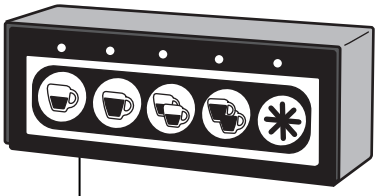

507026
GICAR CODE 9.5.27.60G

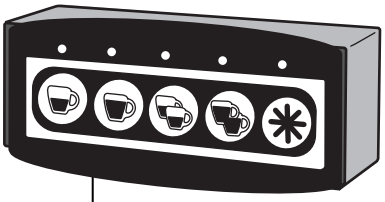

507027
GICAR CODE 9.5.28.30G 00

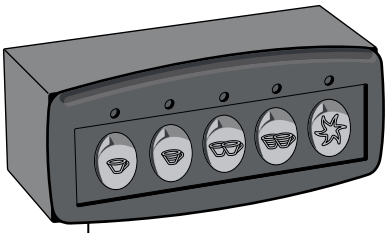

507039
GICAR CODE 9.5.28.66G 00

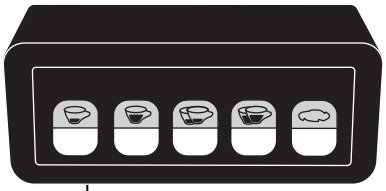

507032
GICAR CODE 9.5.28.61G 00

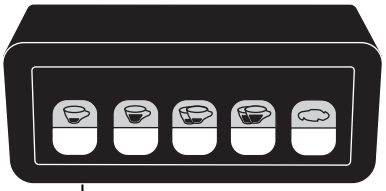

507033
GICAR CODE 9.5.28.59G 00

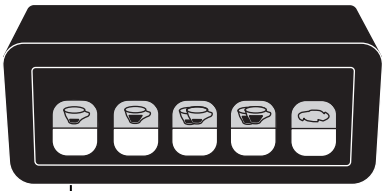

507041
GICAR CODE 9.9.07.66G

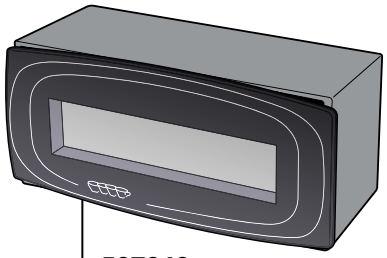

507043

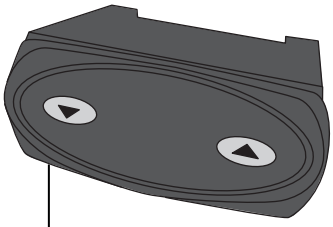

507030
GICAR CODE 9.3.00.43G

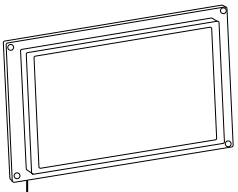

705342
DISPLAY LCD
GRAFICO 1GR
GICAR CODE 8.8.15.61G

PARTI COMPATIBILI FAEMA Tav. 01

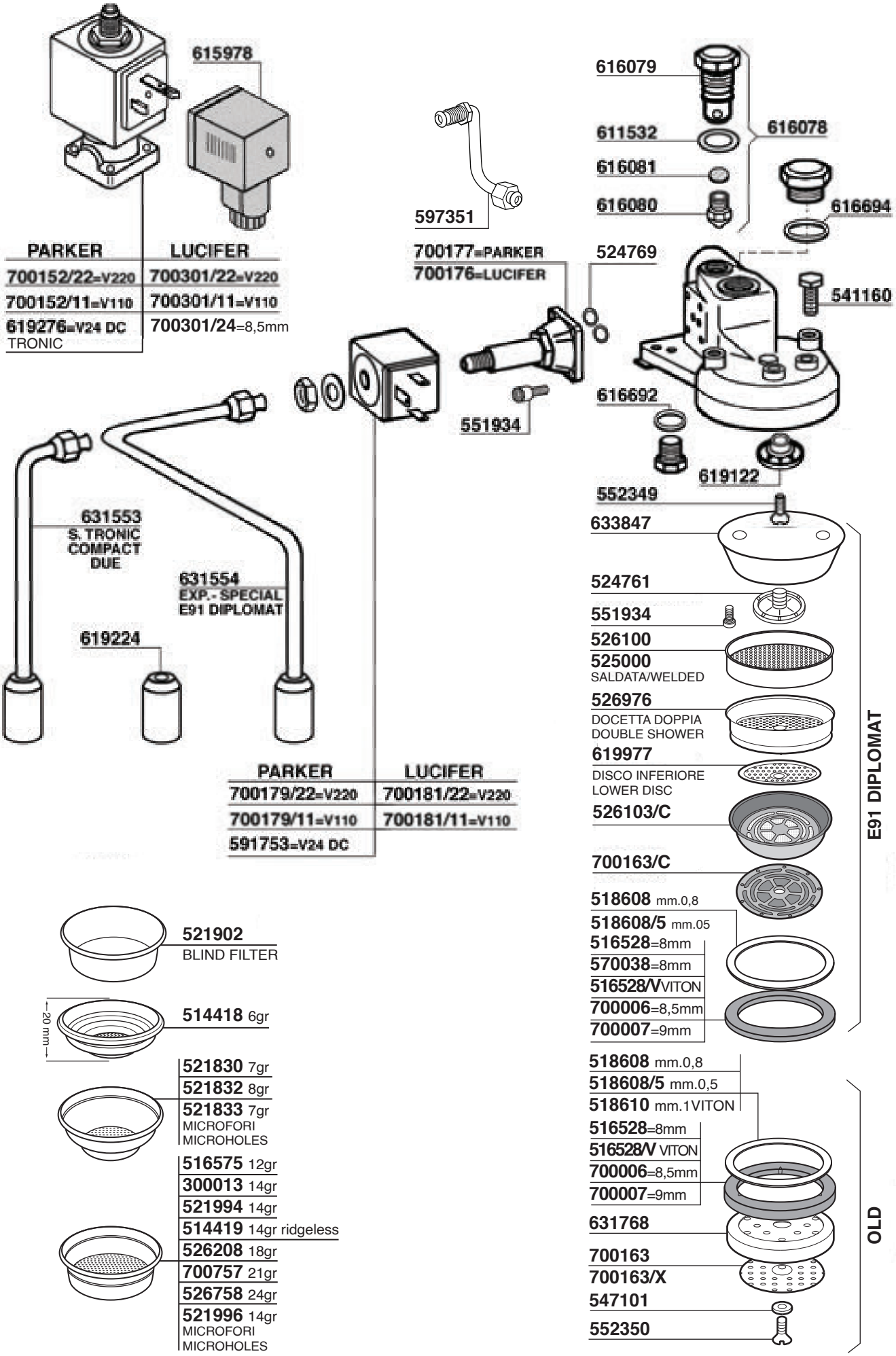

PARTI COMPATIBILI FAEMA Tav.02

E91 - E92 - ELITE - EMBLEMA - ENOVA - STYLEMA - TEOREMA

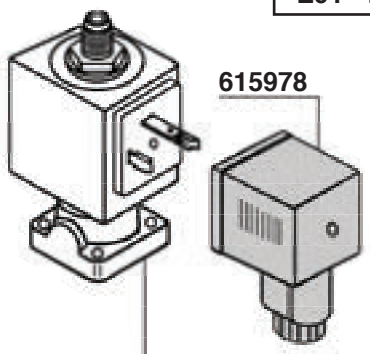

PARKER	LUCIFER
700152/22=V220	700301/22=V220
700152/11=V110	700301/11=V110

PARKER	LUCIFER
700179/22=V220	700181/22=V220
700179/11=V110	700181/11=V110

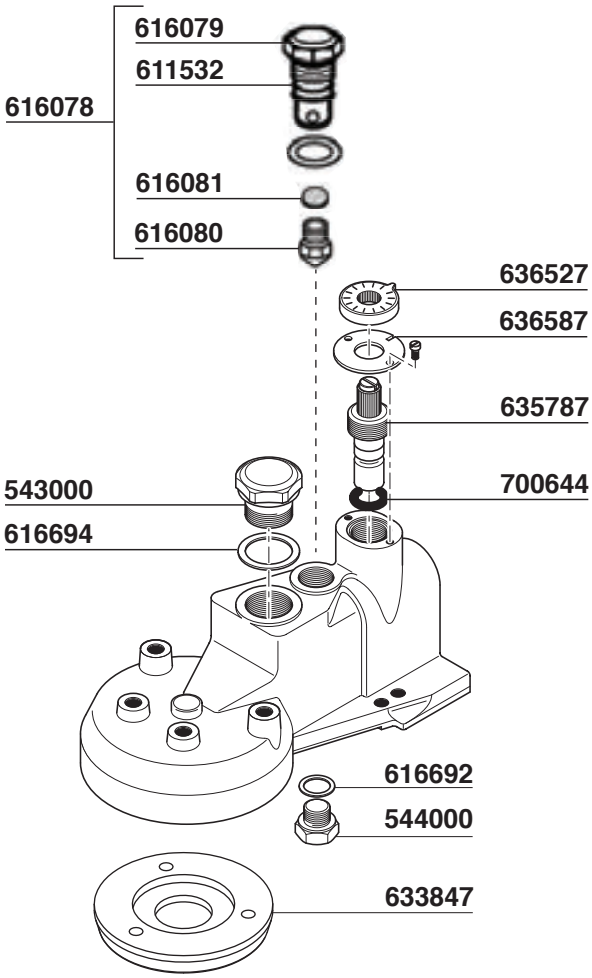

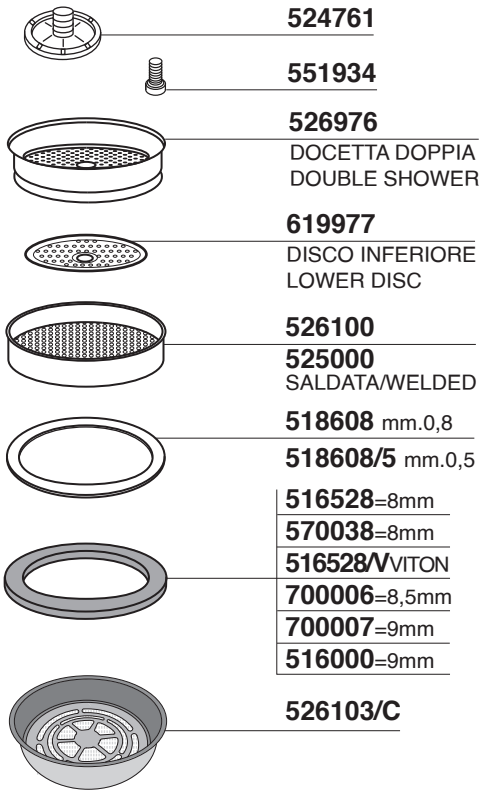

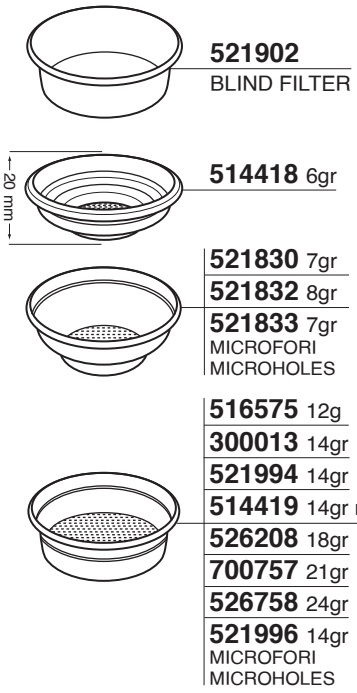

PARTI COMPATIBILI FAEMA Tav.03

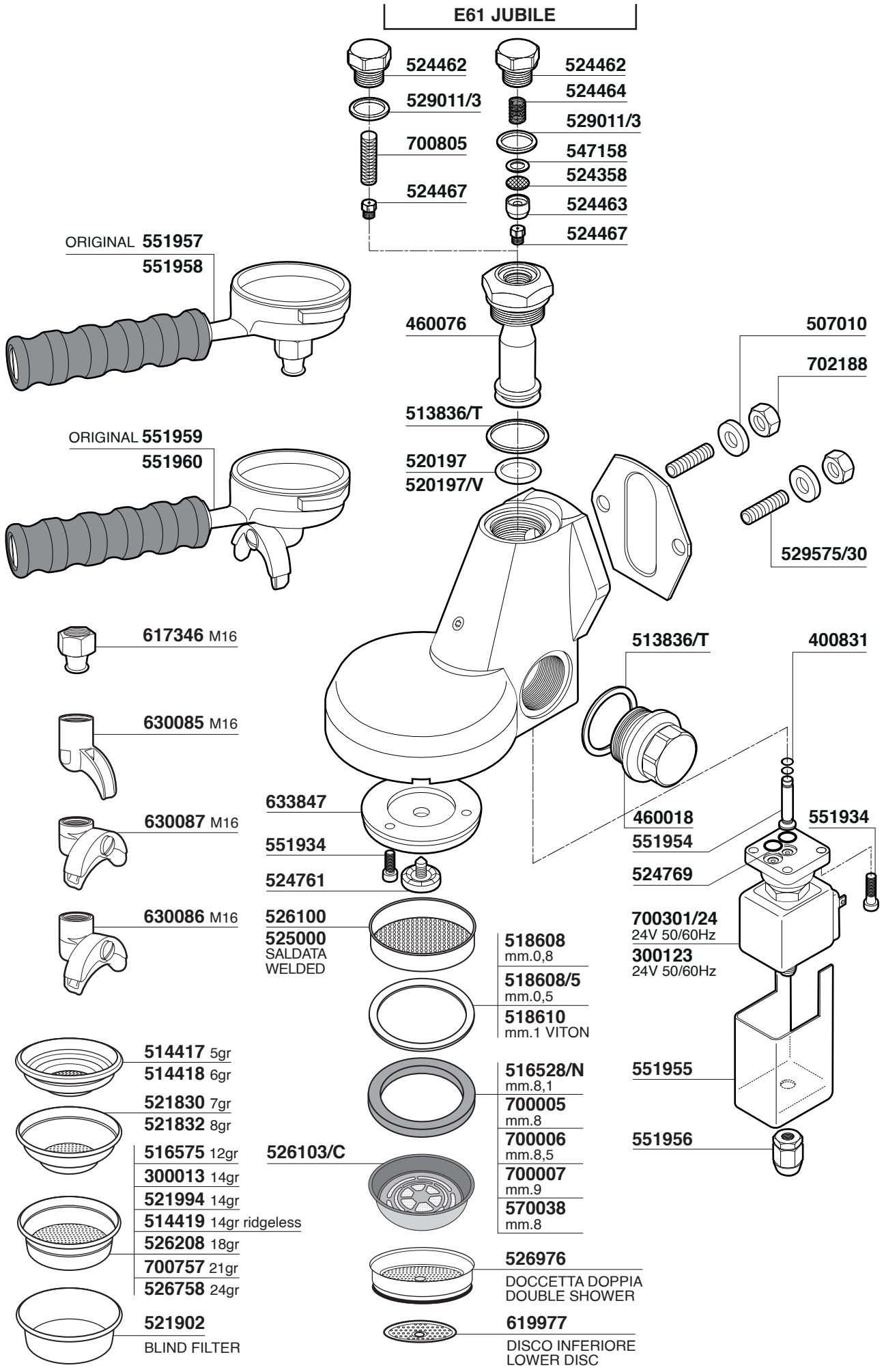

PORTAFILTRI

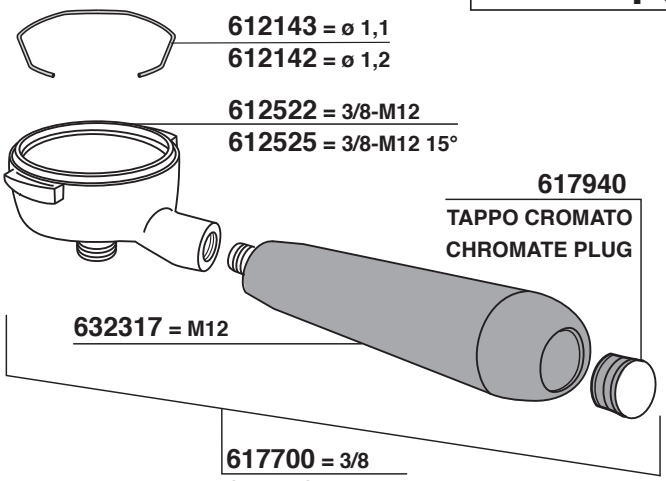

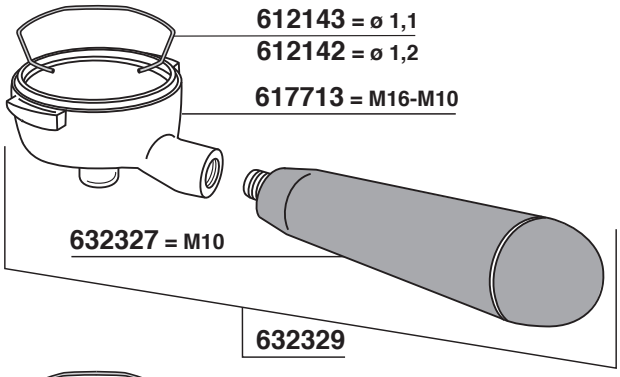

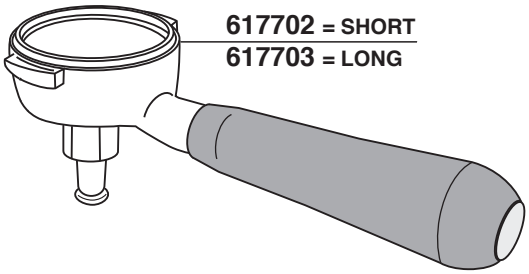

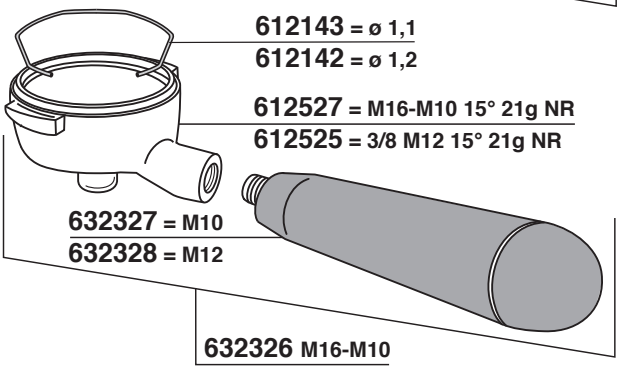

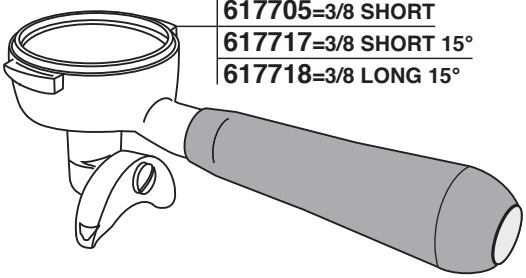

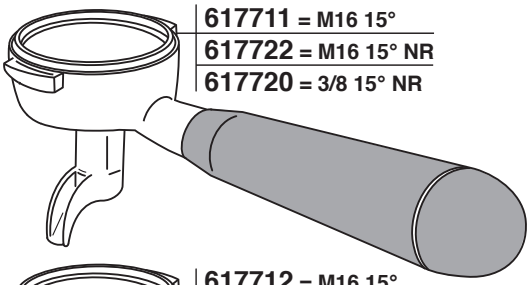

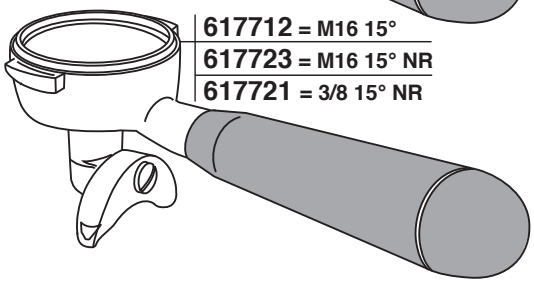

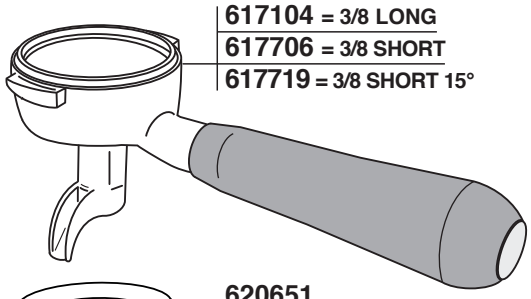

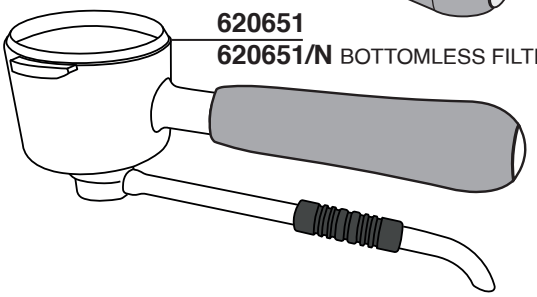

511672=SHORT
591733=LONG

630086

630086/8

700076/R
FLUSSO REGOLABILE
ADJUSTABLE FLOW

630087

630087/8

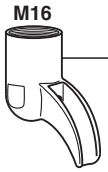

630085

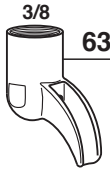

630085/8

700075/R
FLUSSO REGOLABILE
ADJUSTABLE FLOW

700024

618522

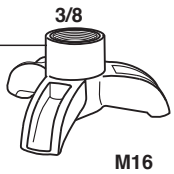

502003=SHORT
615599=LONG

617346=SHORT
617345=LONG

PARTI COMPATIBILI FAEMA Tav. 05

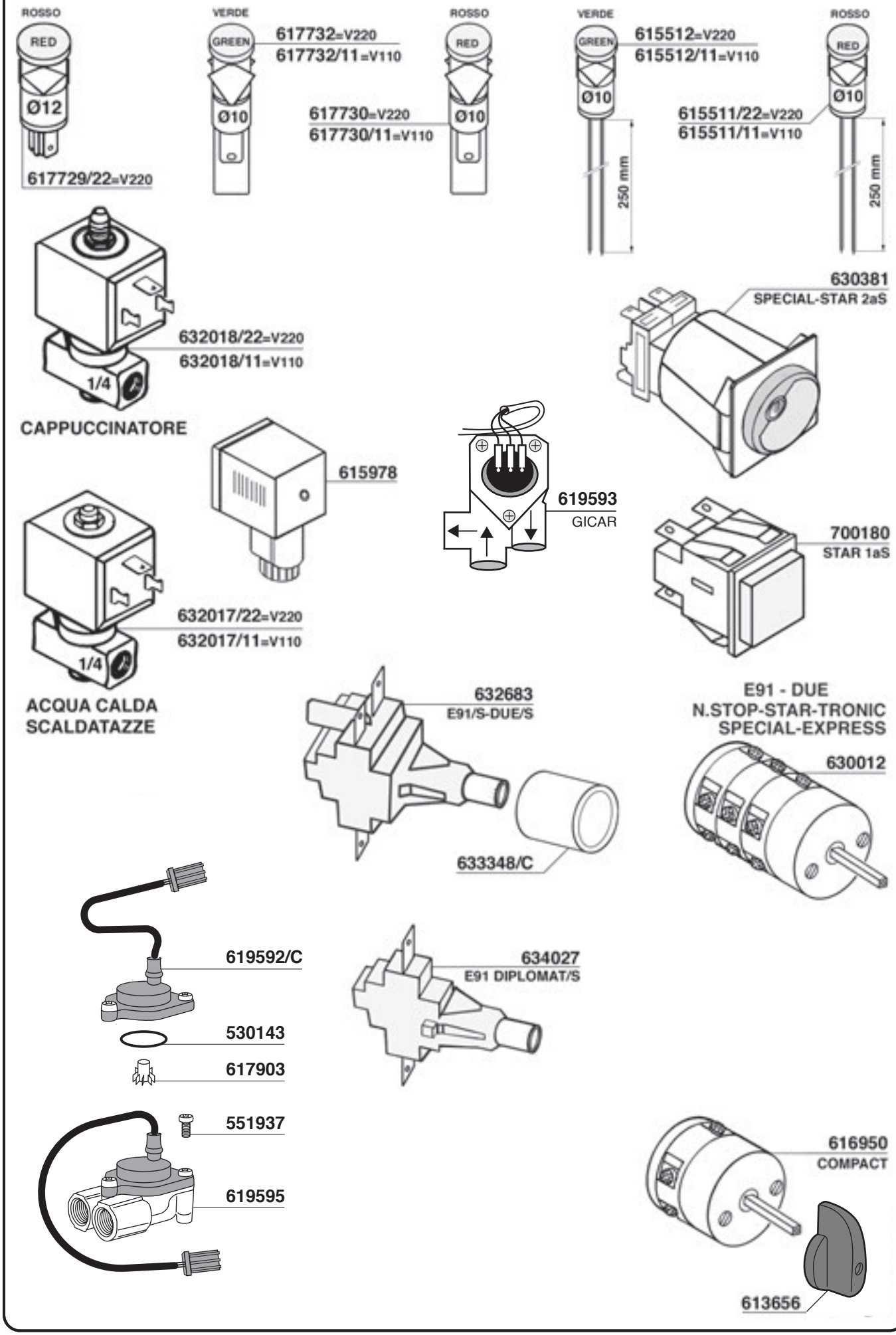

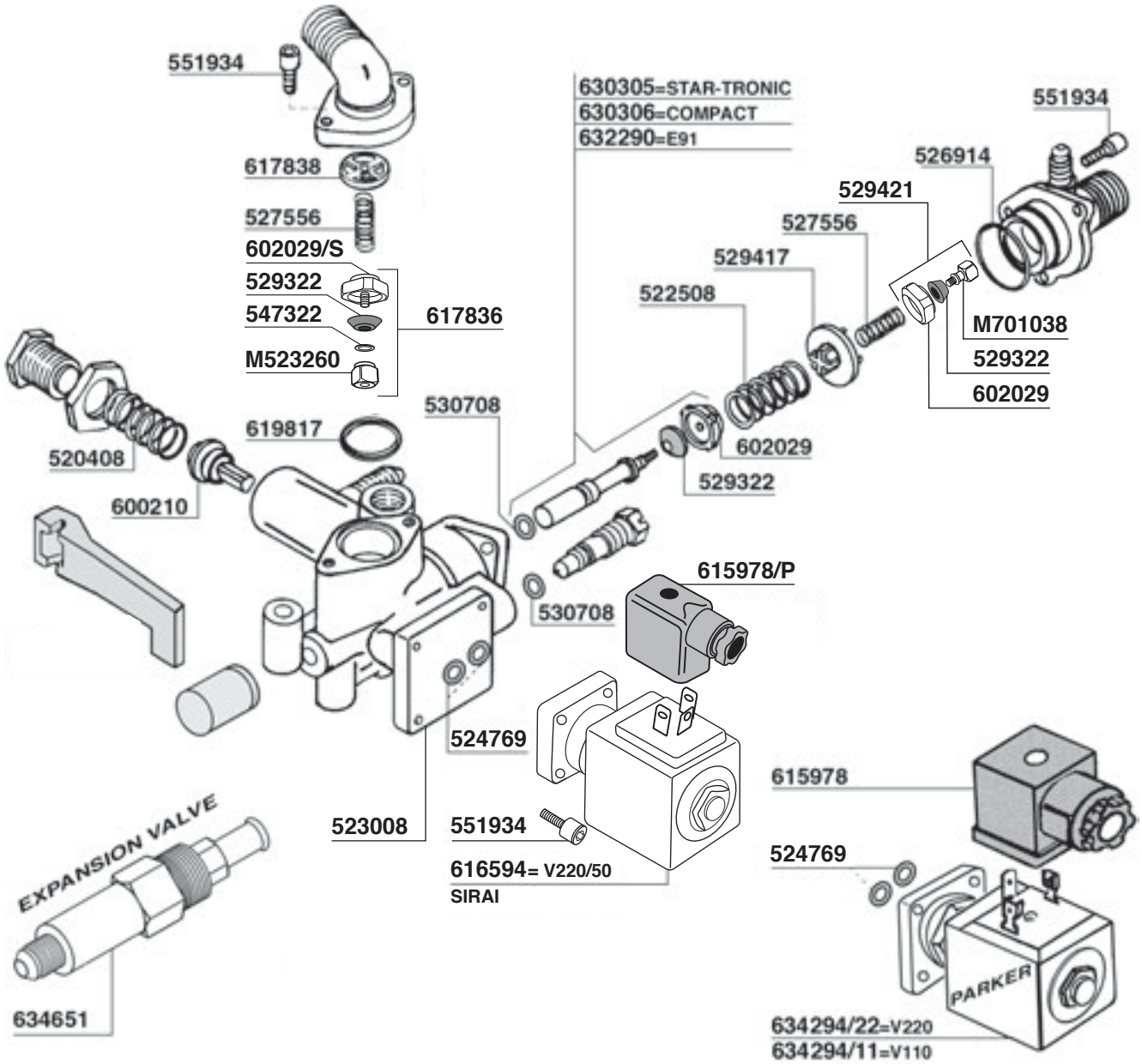
551934
617838
527556
602029/S
529322
547322
M523260
617836
630305=STAR-TRONIC
630306=COMPACT
632290=E91
551934
526914
529421
527556
529417
522508
M701038
529322
602029
530708
619817
520408
600210
602029
529322
615978/P
530708
524769
523008
551934
616594= V220/50
SIRAI
615978
524769
EXPANSION VALVE
634651
PARKER
634294/22=V220
634294/11=V110

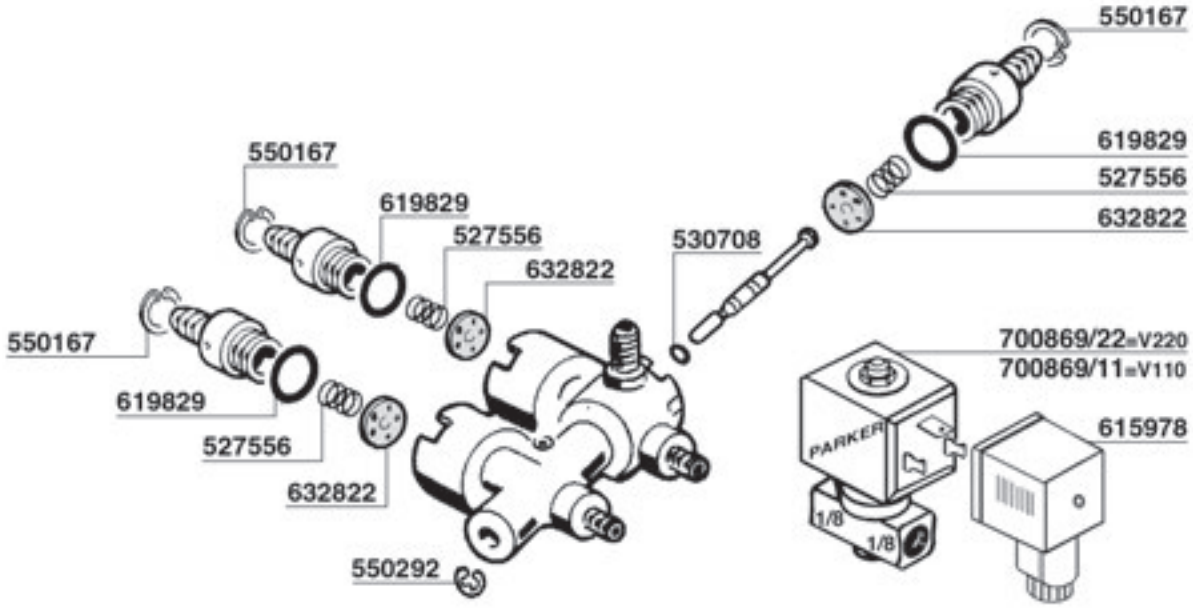
550167
619829
527556
632822
550167
619829
527556
632822
530708
550167
619829
527556
632822
700869/22=V220
700869/11=V110
PARKER
1/8
1/8
615978
550292

PARTI COMPATIBILI FAEMA Tav.07

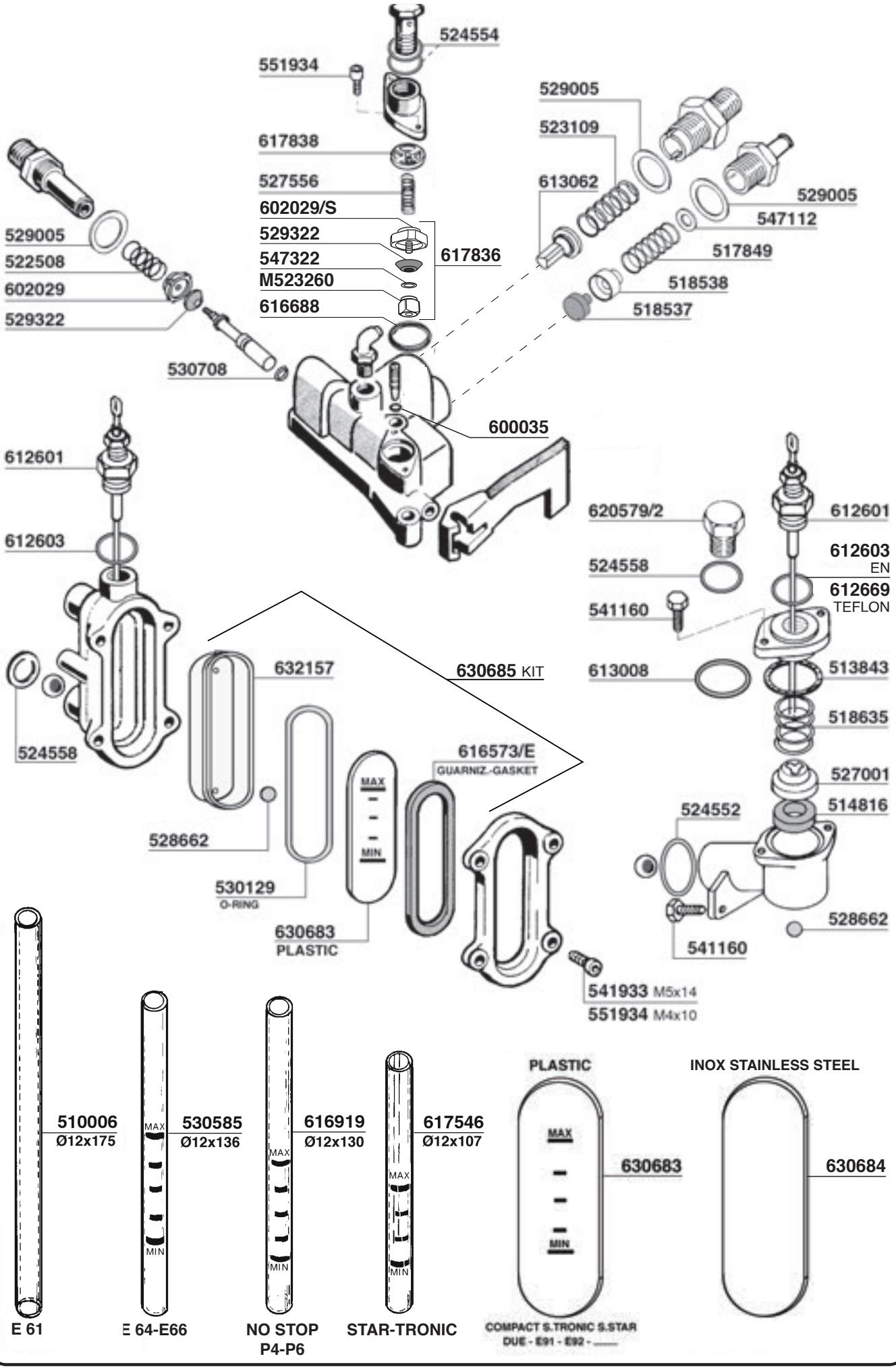

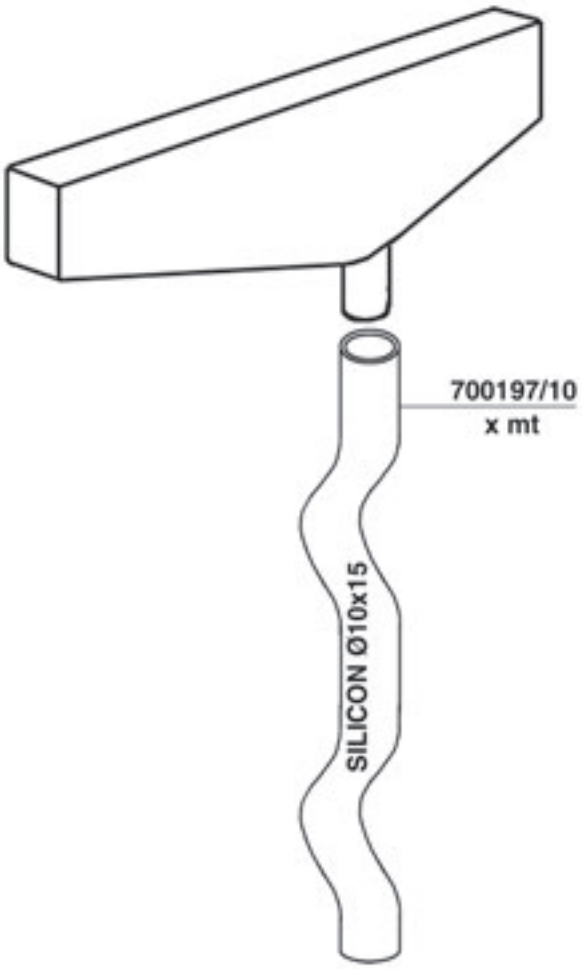
700197/10
x mt
SILICON Ø10x15

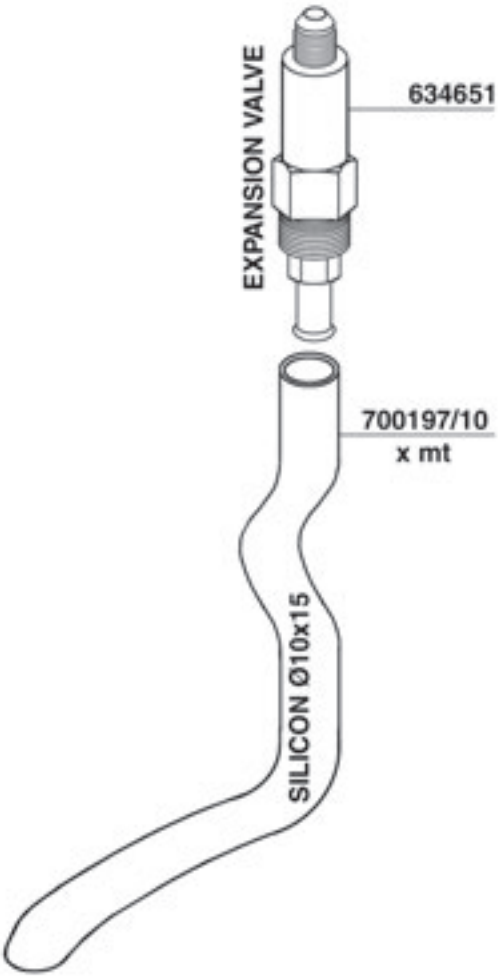
EXPANSION VALVE
634651
700197/10
x mt
SILICON Ø10x15

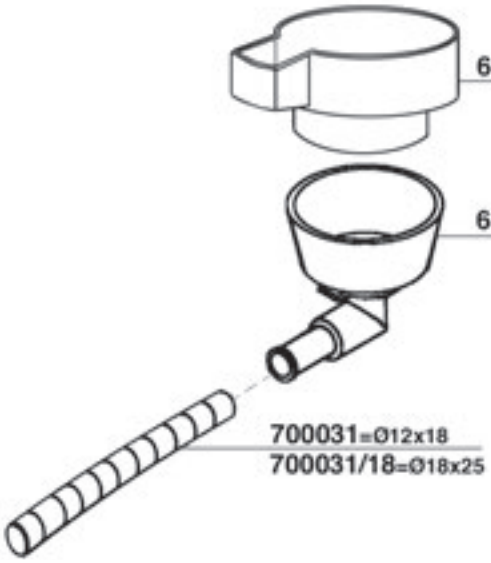
634635
632932
700031=Ø12x18
700031/18=Ø18x25

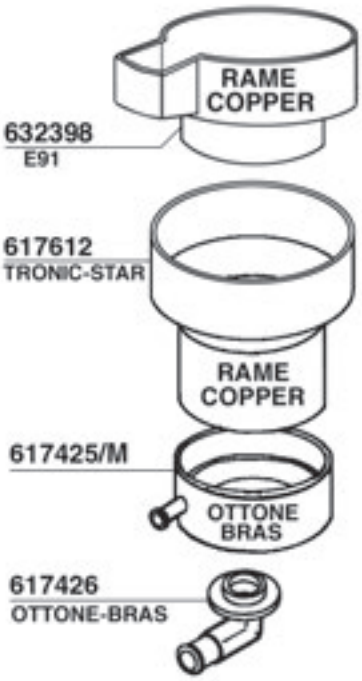
RAME
COPPER
632398
E91
617612
TRONIC-STAR
RAME
COPPER
617425/M
OTTONE
BRAS
617426
OTTONE-BRAS

570047
QUINDICI

PARTI COMPATIBILI FAEMA Tav. 09

N. STOP-COMPACT

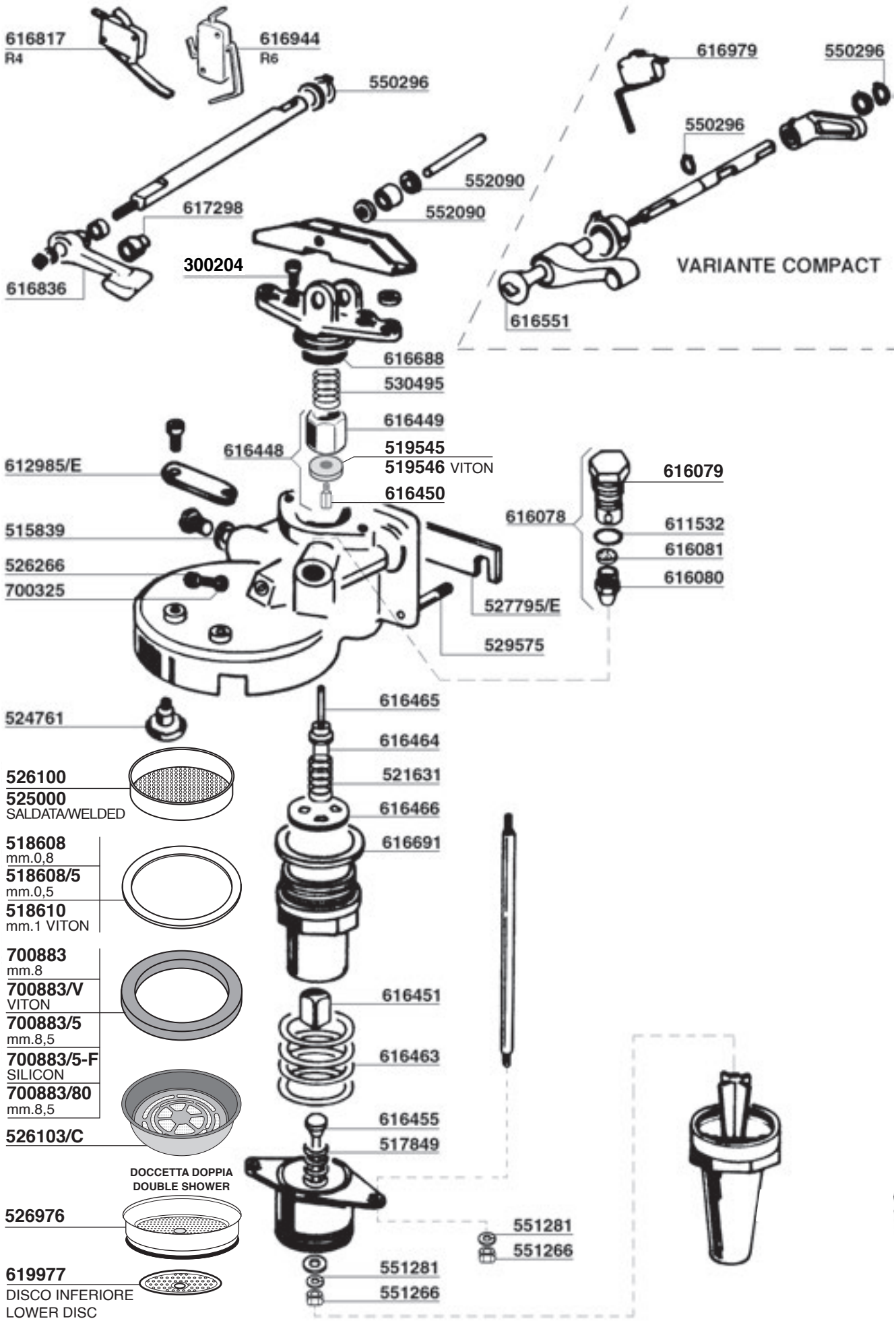

P4/P6 - E64/E66

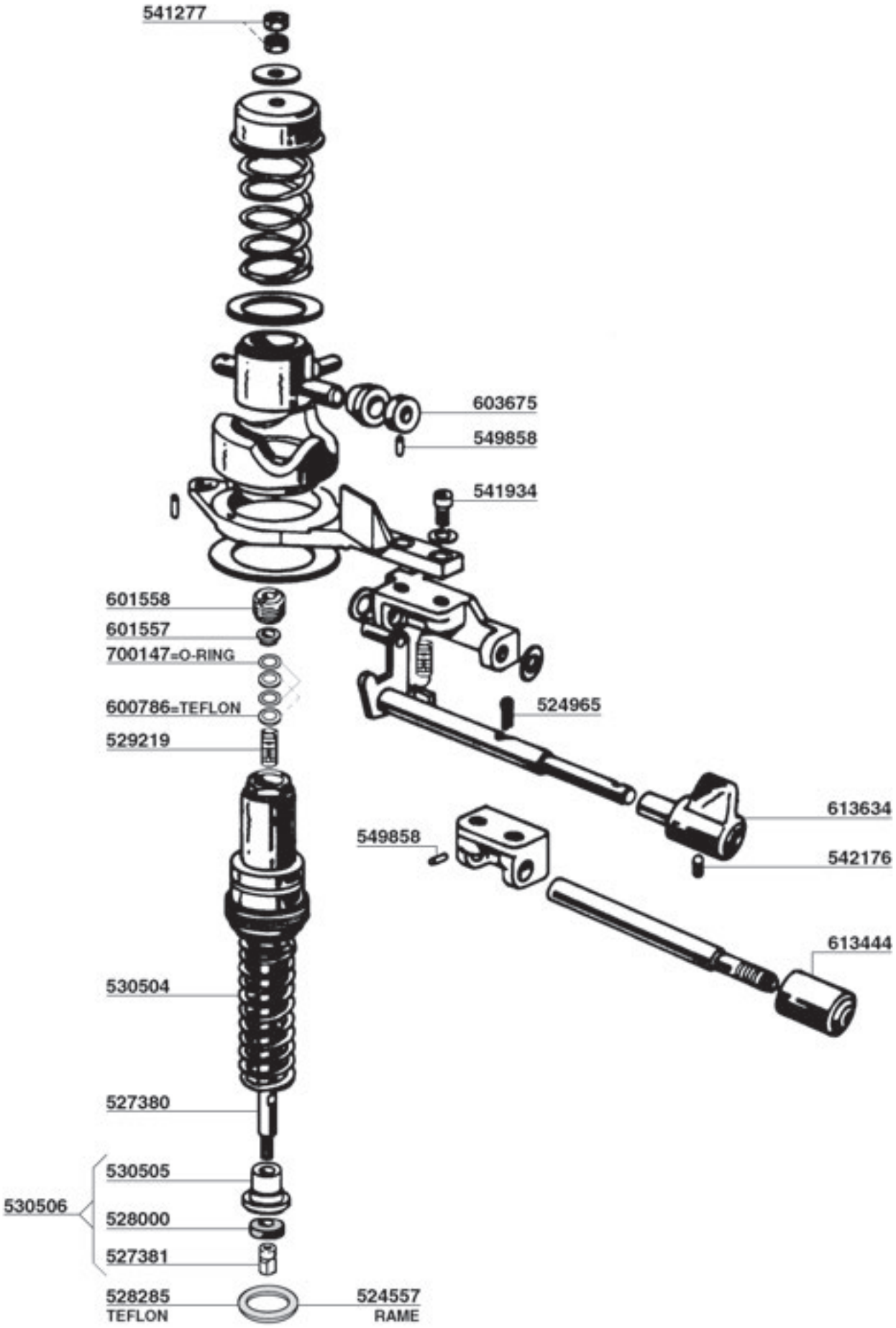
541277
603675
549858
541934
601558
601557
700147=O-RING
600786=TEFLON
529219
524965
613634
549858
542176
613444
530504
527380
530505
530506
528000
527381
528285
TEFLON
524557
RAME

PARTI COMPATIBILI FAEMA Tav. 11

P4/P6 - E64/E66

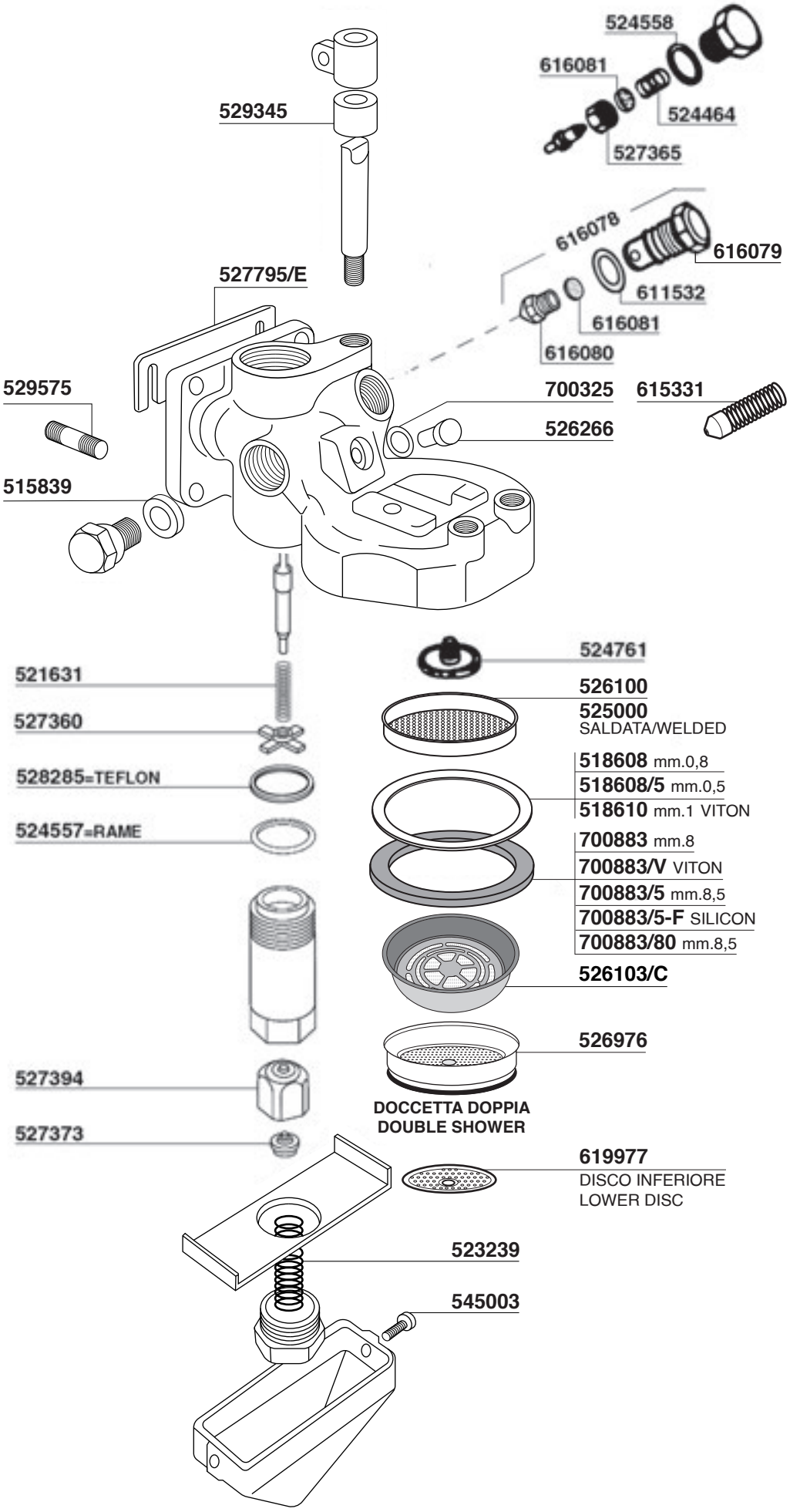

PARTI COMPATIBILI FAEMA Tav. 12

P4/P6 - E64/E66

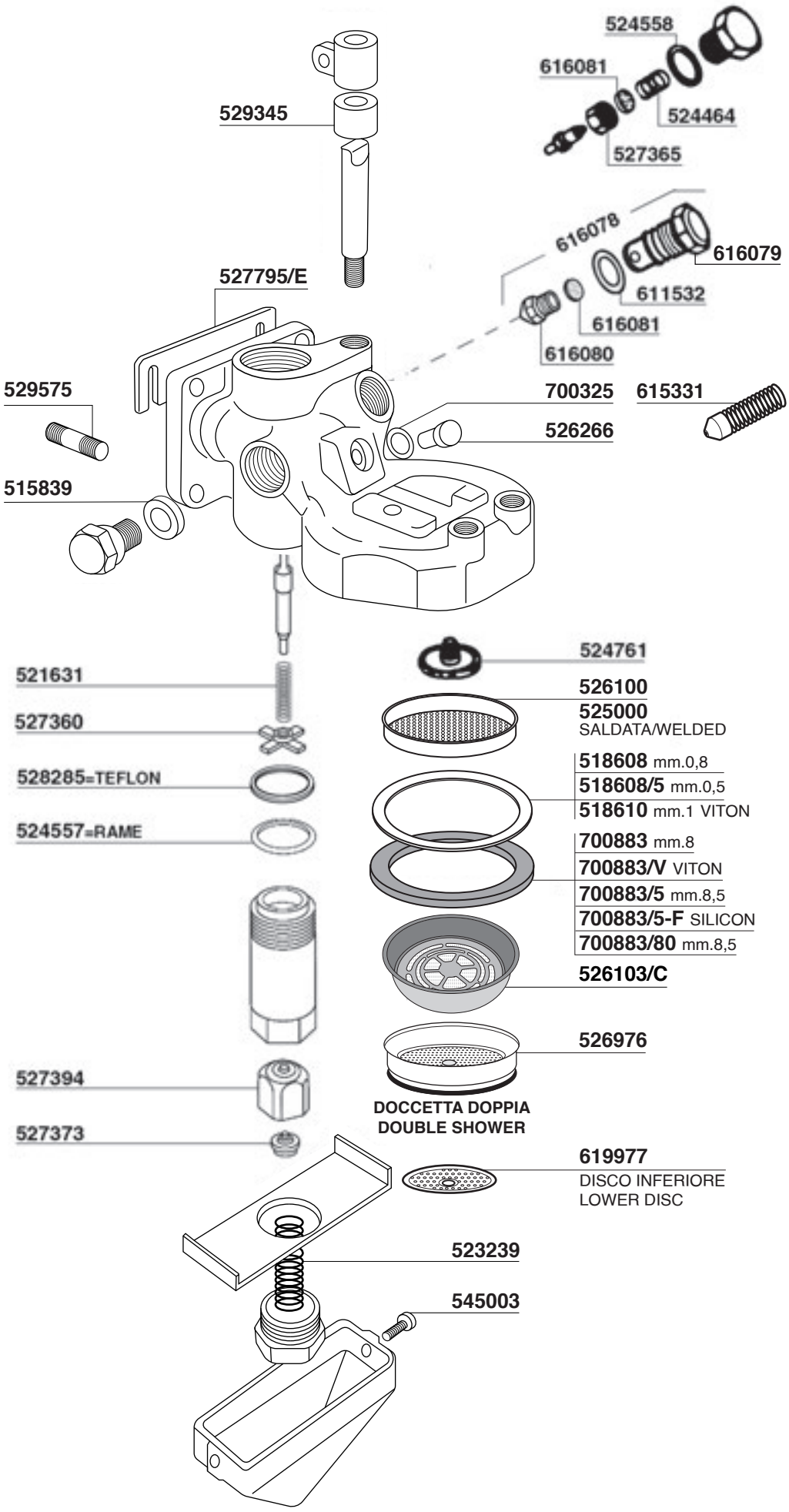

PARTI COMPATIBILI FAEMA Tav. 13

NO STOP/A - P6

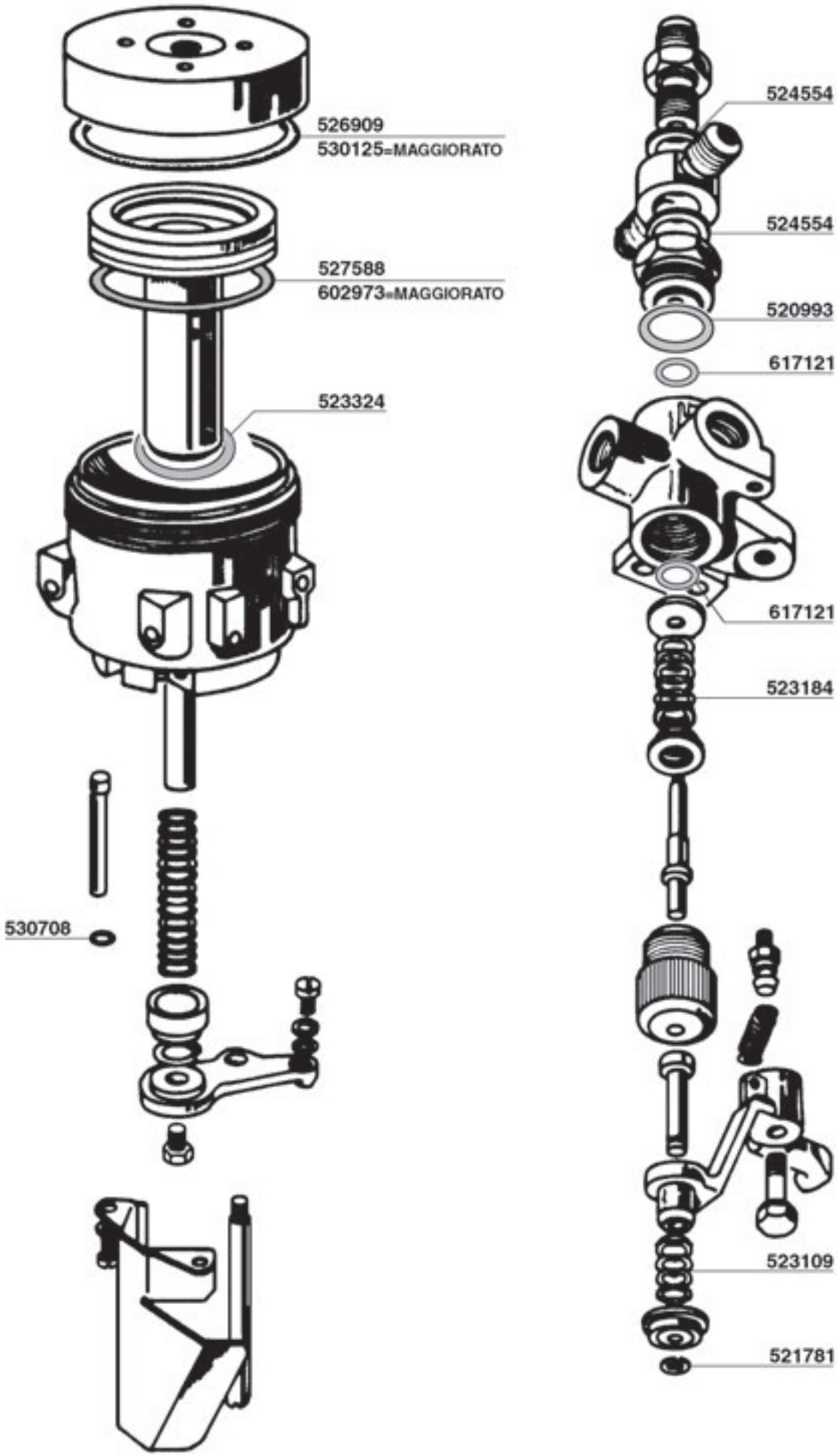

PARTI COMPATIBILI FAEMA Tav. 14

E61 - ARIETE

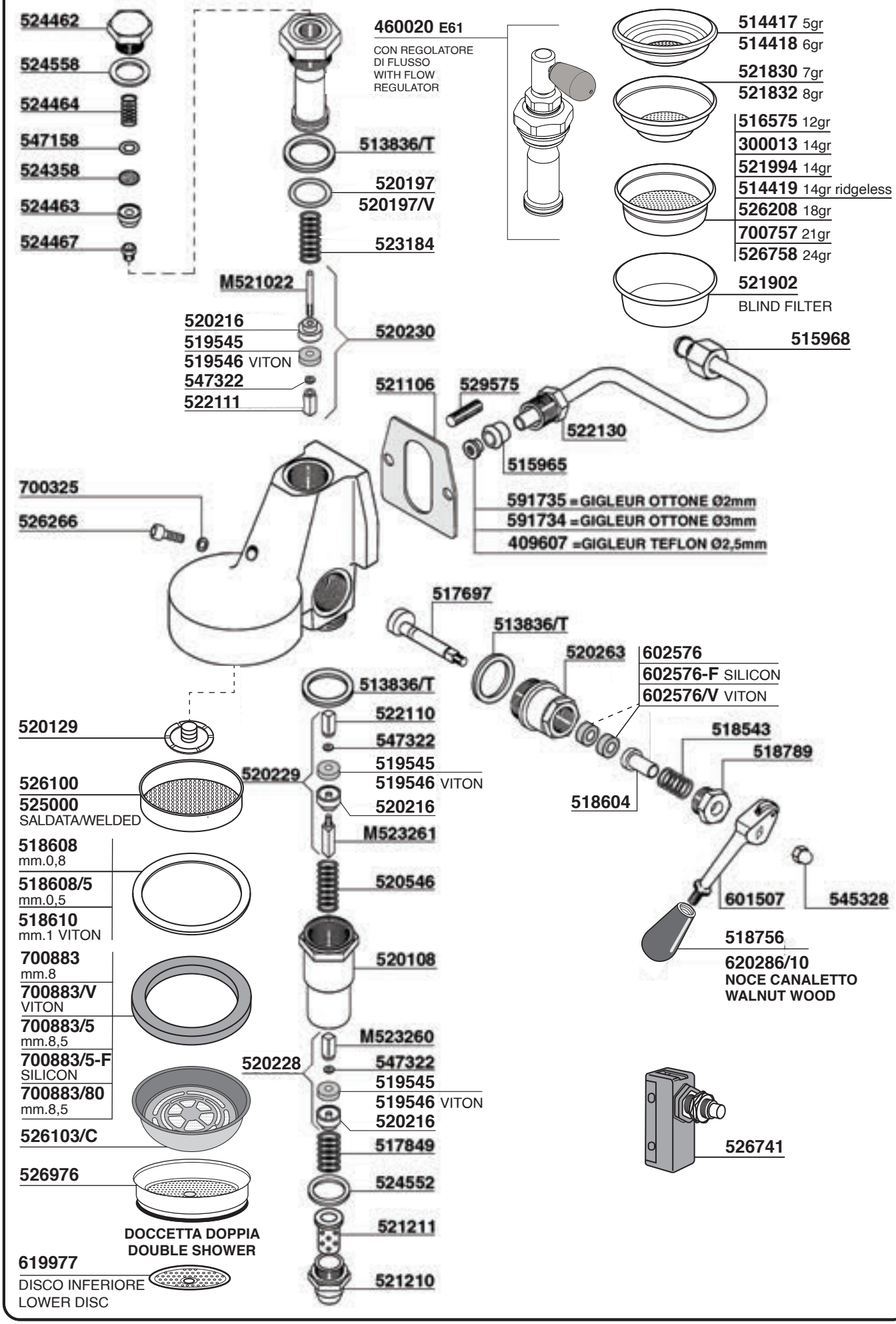

155

PARTI COMPATIBILI FAEMA Tav. 15

ZODIACO - T1

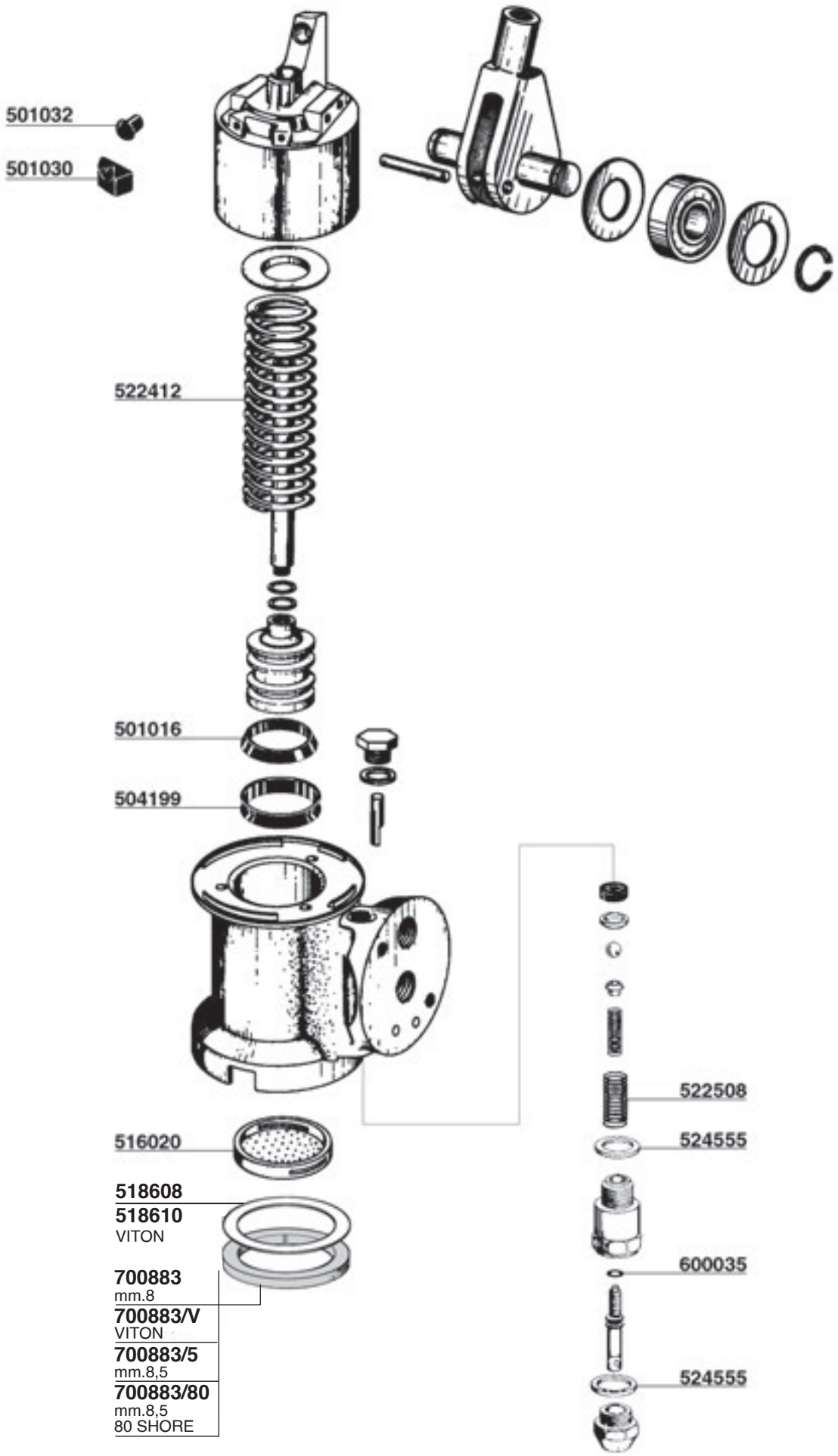

N.STOP-COMPACT - EXPRESS-TRONIC

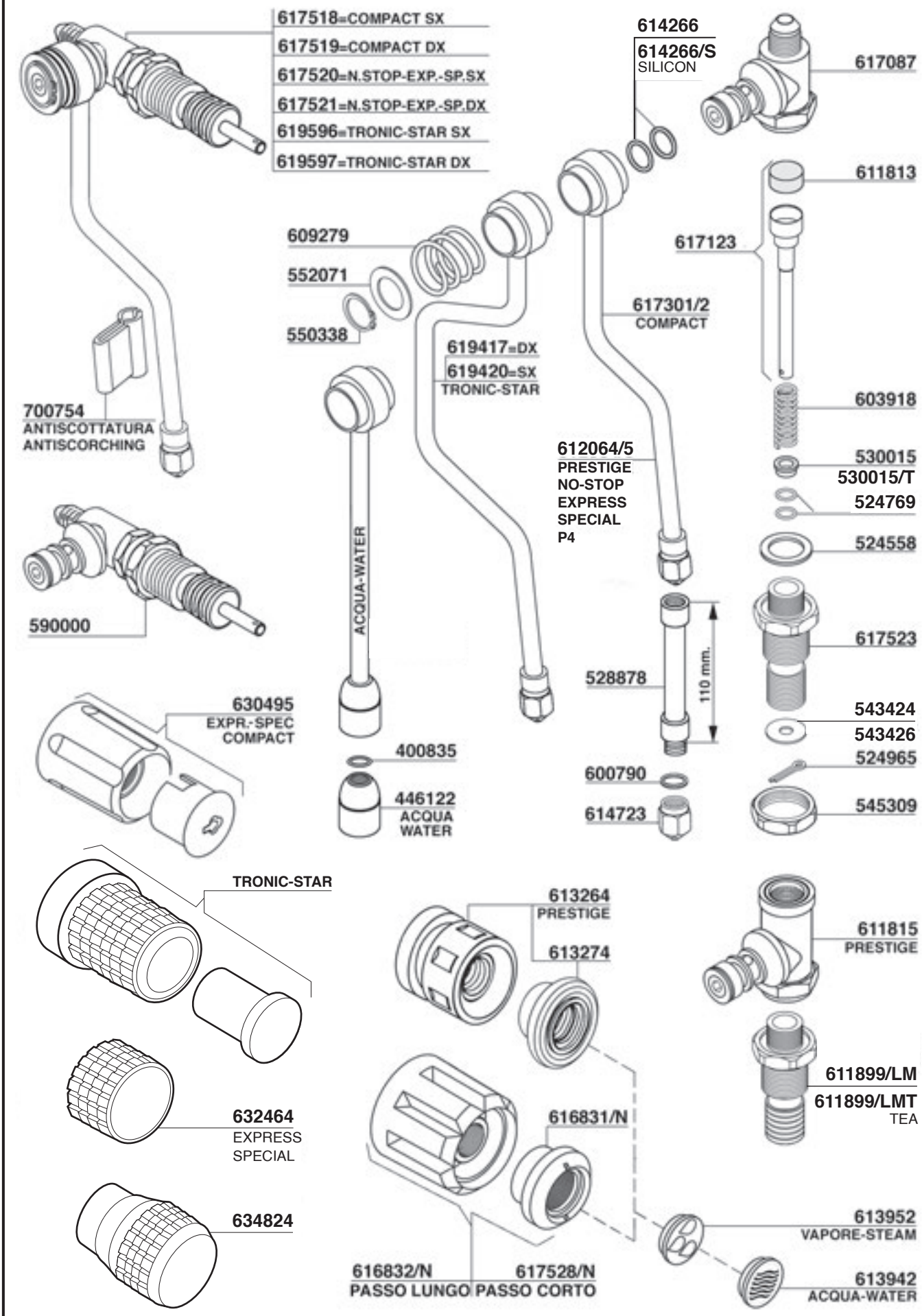

PARTI COMPATIBILI FAEMA Tav. 17

E91 - DUE - DIPLOMAT

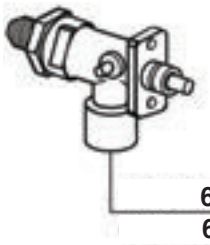

634646/X
634646/T

632322
524552
530495
519546 viton
616669
634299/X
633611
530708 int. Ø4,2
616686=1a serie=old Ø7,2
634603
534000 41mm
632319 37mm
632762
632313/4 DX-SX
552287
632841
591857

590002 KIT FAEMA

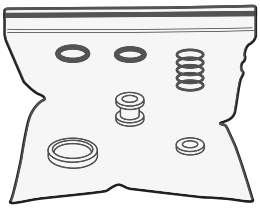

632350
547112
632346
530132
701039 CROMATO
614266
614266/S SILICON
616694

633672=DUE-E91

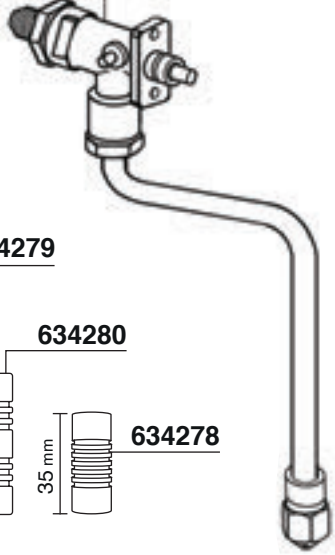

633797

632347/X=INOX STAINLESS STEEL

16 cm

632347

700754 ANTISCOTTATURA ANTISCORCHING

633432 O-RING

703472/M 4 HOLES
633429 2 HOLES

633430 2 HOLES
633433 3 HOLES

600790
614723
614724 BLIND
632348
530138
530138/V VITON
633433 =3 HOLES FEMALE
633433/4 =4 HOLES FEMALE

634279
110 mm
634280
50 mm
634278
35 mm

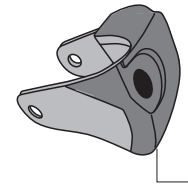

632310 DX
E92

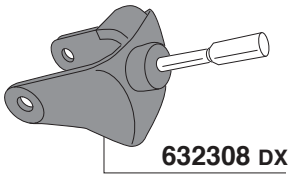

632308 DX
E91-ENOVA
STYLEMA-EMBLEMA

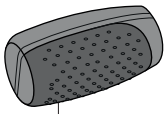

632345
E92

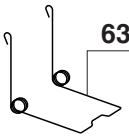

632315

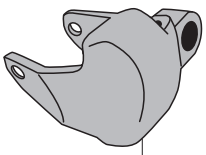

632311 SX
E92

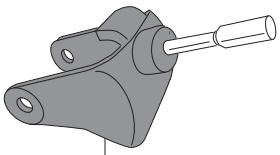

632309 SX
E91-ENOVA
STYLEMA-EMBLEMA

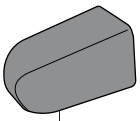

632307
ENOVA-STYLEMA

529000
EMBLEMA
RESTYLIG

PARTI COMPATIBILI FAEMA Tav. 18

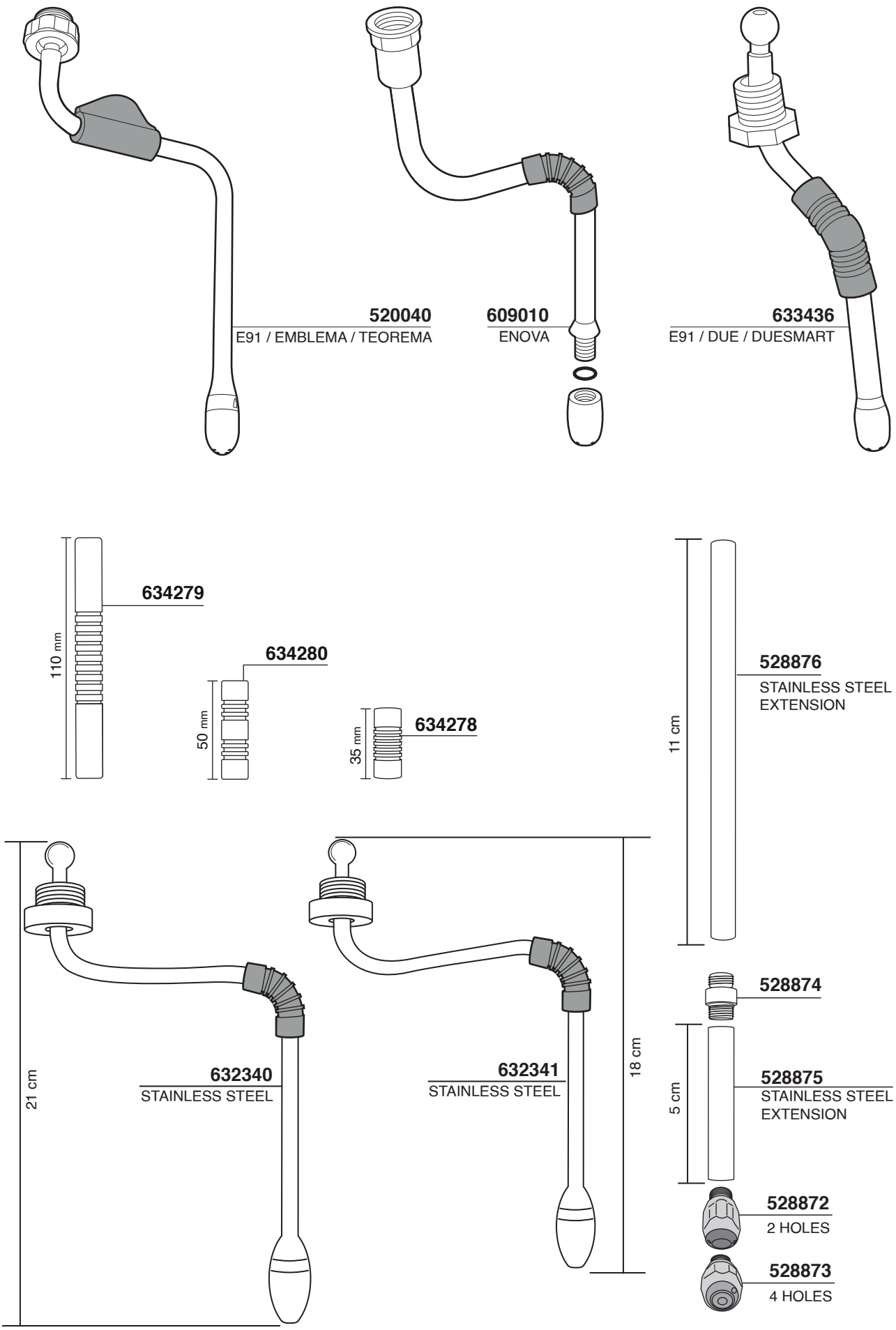

PARTI COMPATIBILI FAEMA Tav. 19

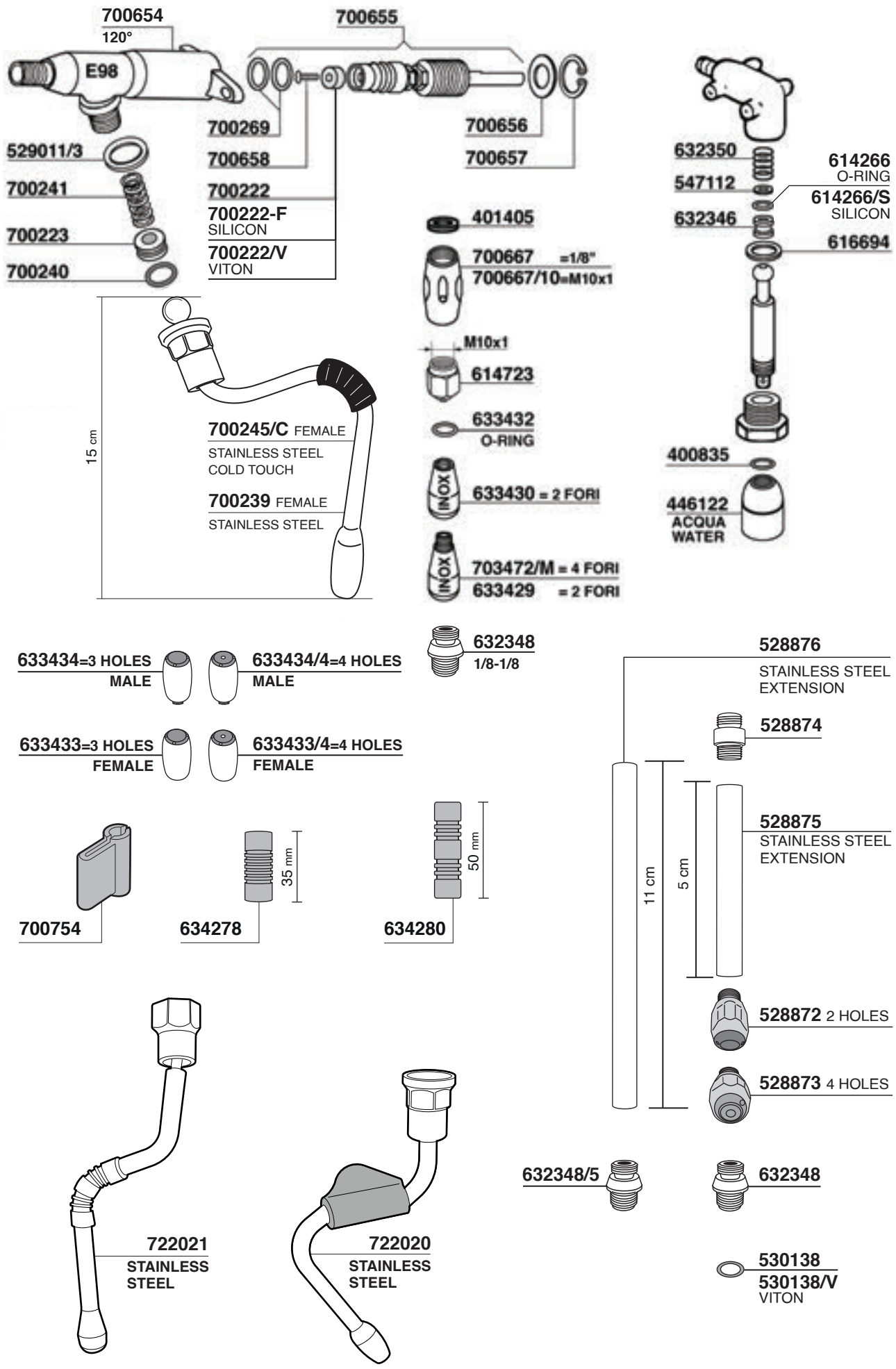

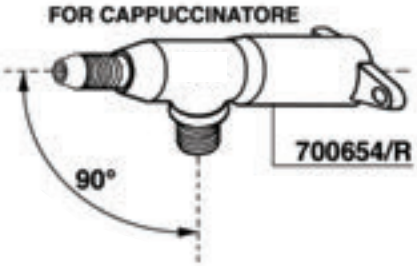
FOR CAPPUCCINATORE
700654/R
90°

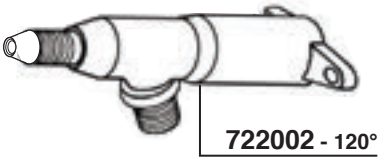
722002 - 120°

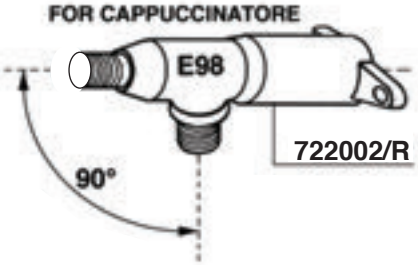
FOR CAPPUCCINATORE
E98
722002/R
90°

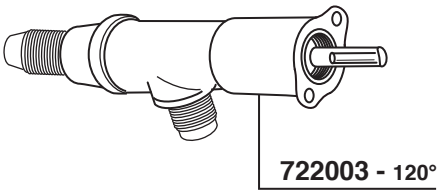
722003 - 120°

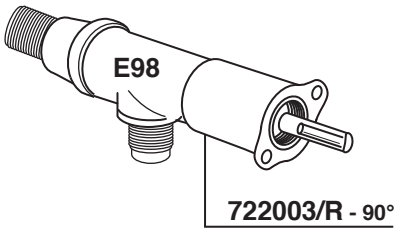
E98
722003/R - 90°

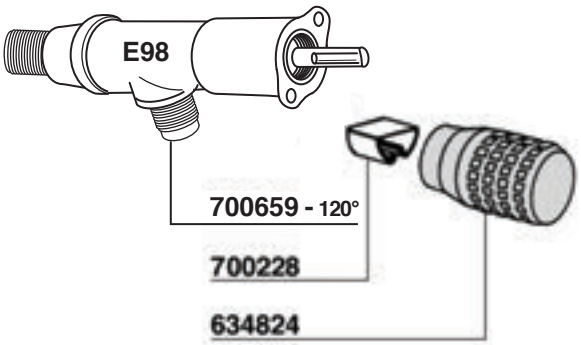
E98
700659 - 120°
700228
634824

PARTI COMPATIBILI FAEMA Tav. 21

700179/22=V220
700179/11=V110
615977
632018/22=V220
632018/11=V110
CAPPUCCINATORE
615978
616694
530137
530136
611532
611532
700617
530138
530138/V
VITON
530139
530140
530140/T
700197
SILICON Ø 4x7
700910
CAPUCCINO ELEGANT
STAINLESS STEEL
700197/8
SILICON Ø 5x8
700914
PERNO
REGOLAZIONE
700913
KIT O-RING

522169
522167
602576
602576-F SILICON
602576/V VITON
700038
522168
547112
519545
519546 VITON
515499
703432
526955
526956

530585
513843
514816
528662
527001
518635
541951
524552

E61-ARIETE-ZODIACO

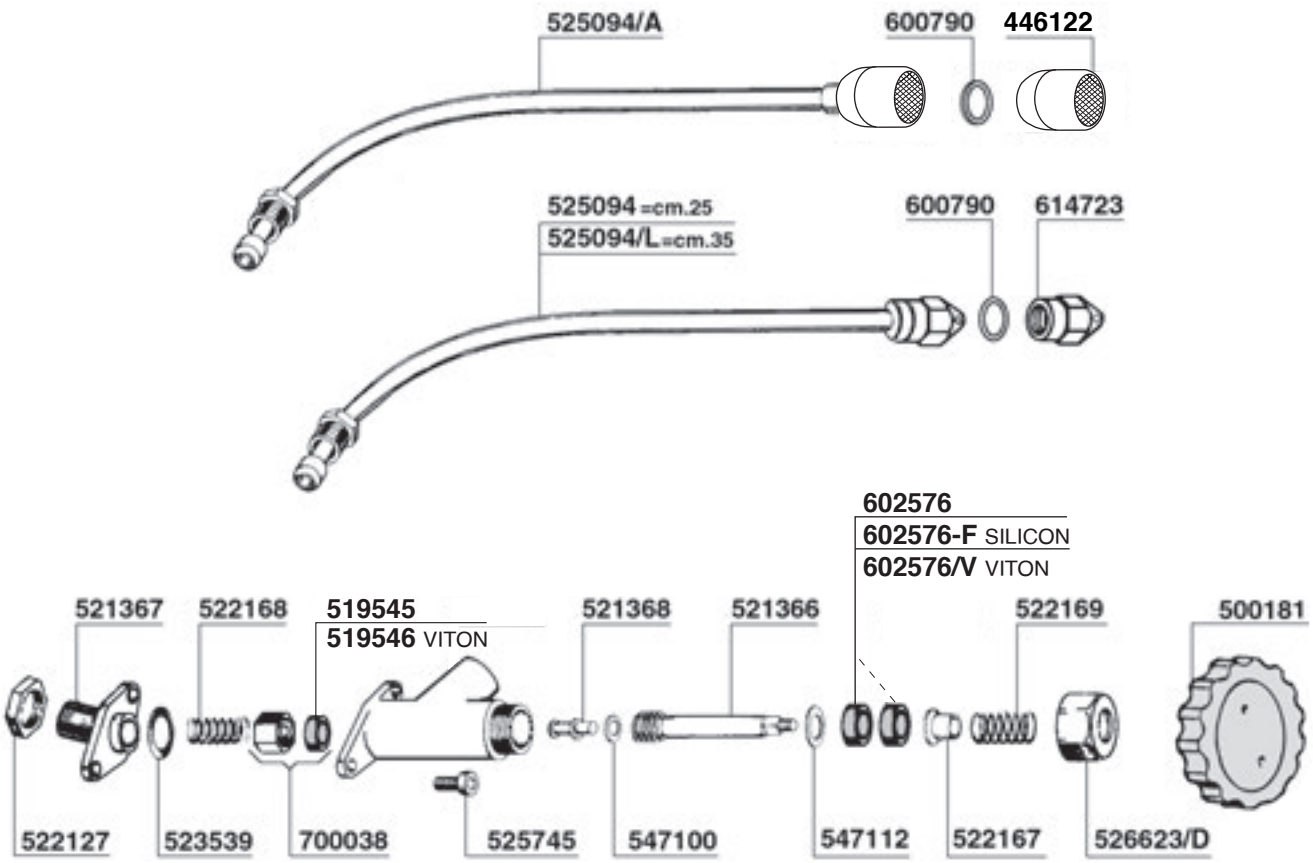

RUBINETTO CON TUBO SNODATO
STEAM / WATER VALVE WITH ARTICULATED PIPE

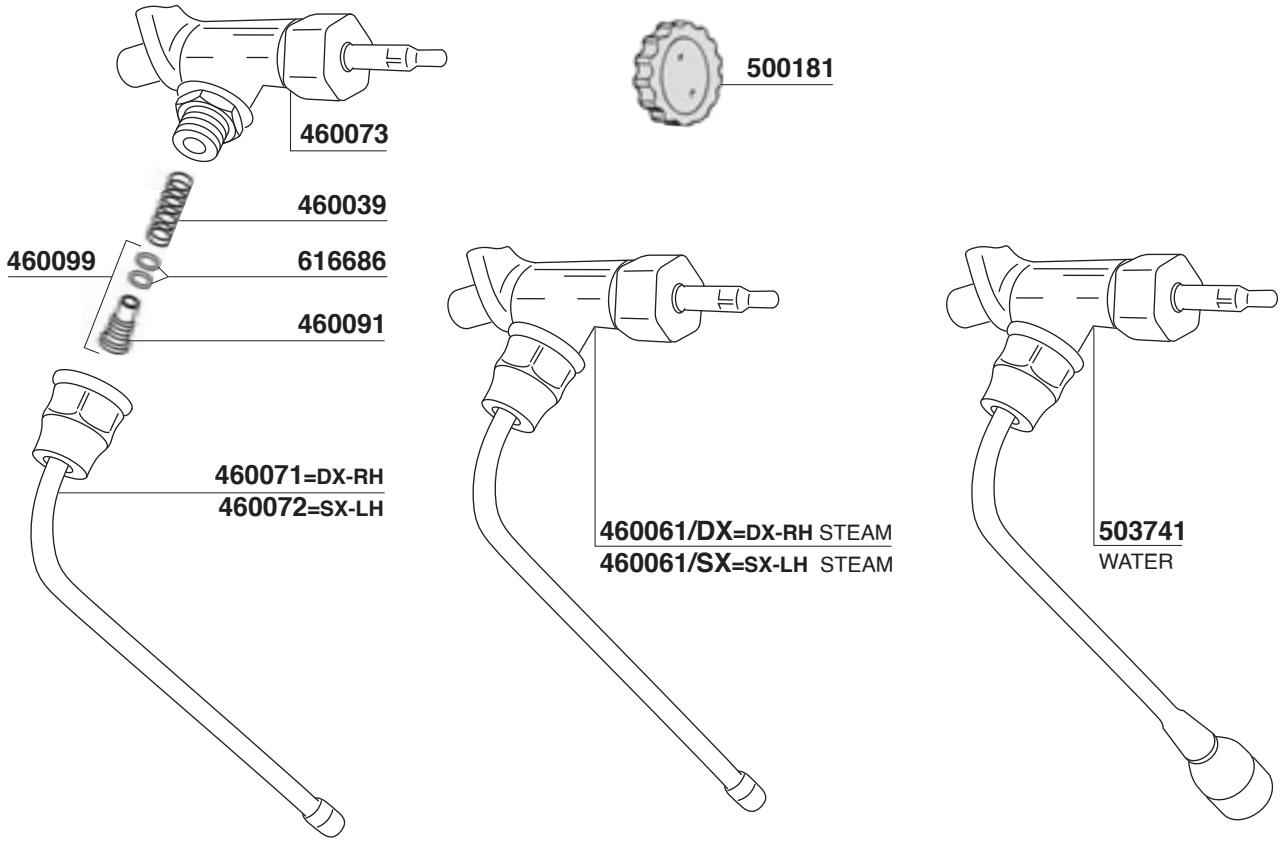

FAEMA

Tav.23

E61-ARIETE-ZODIACO

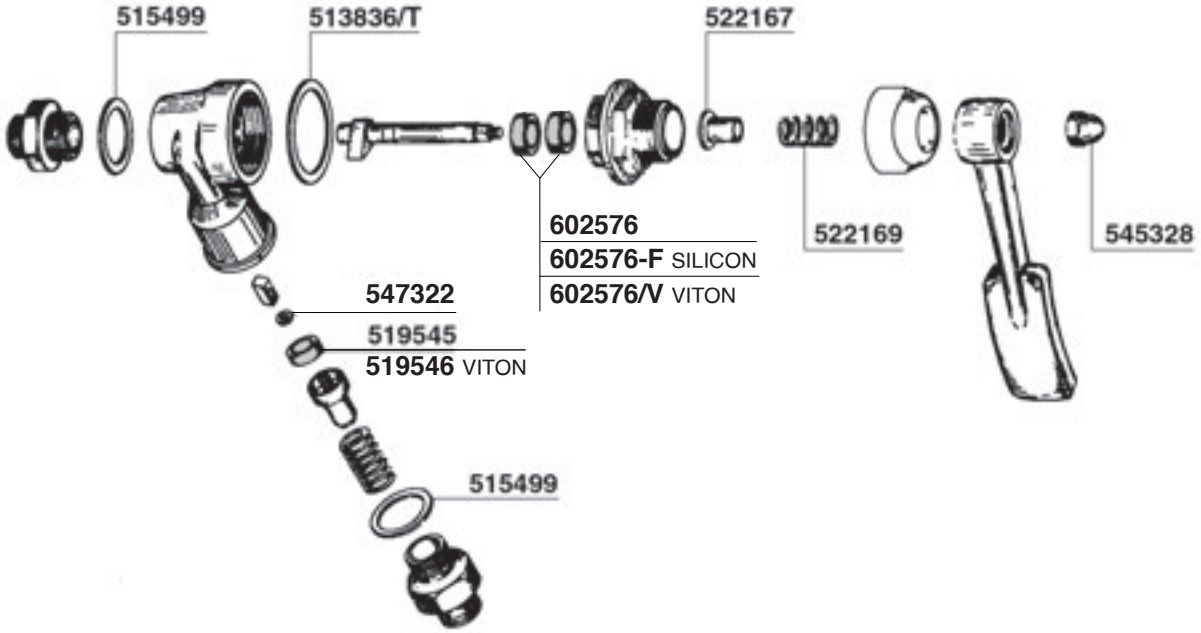

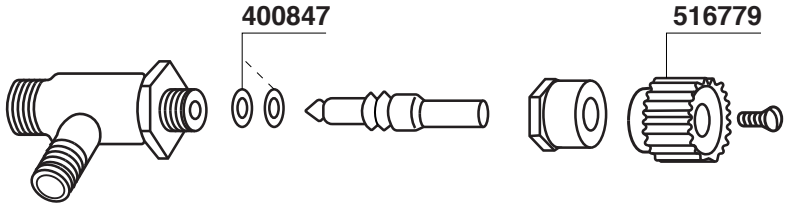

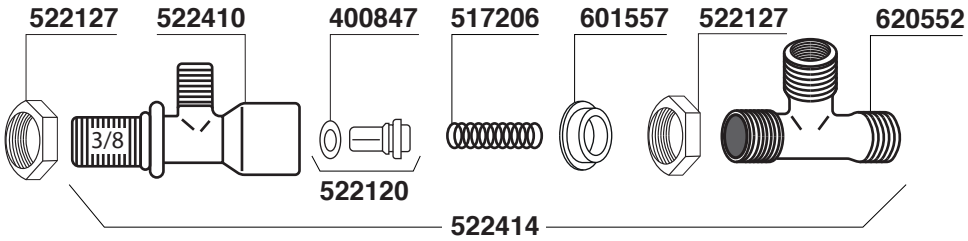

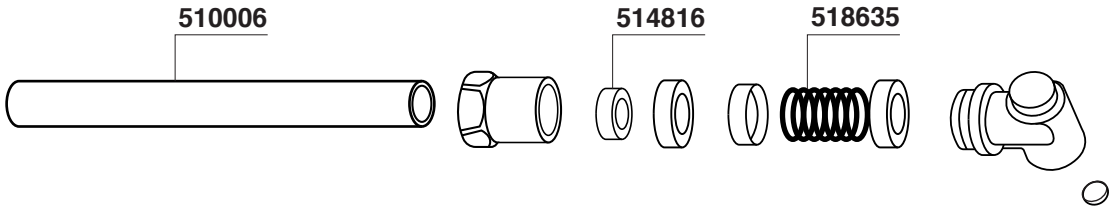

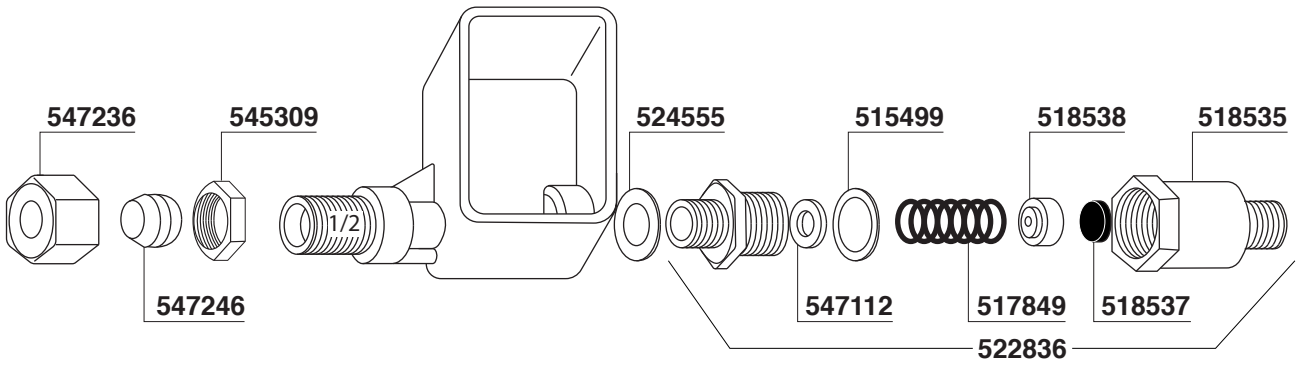

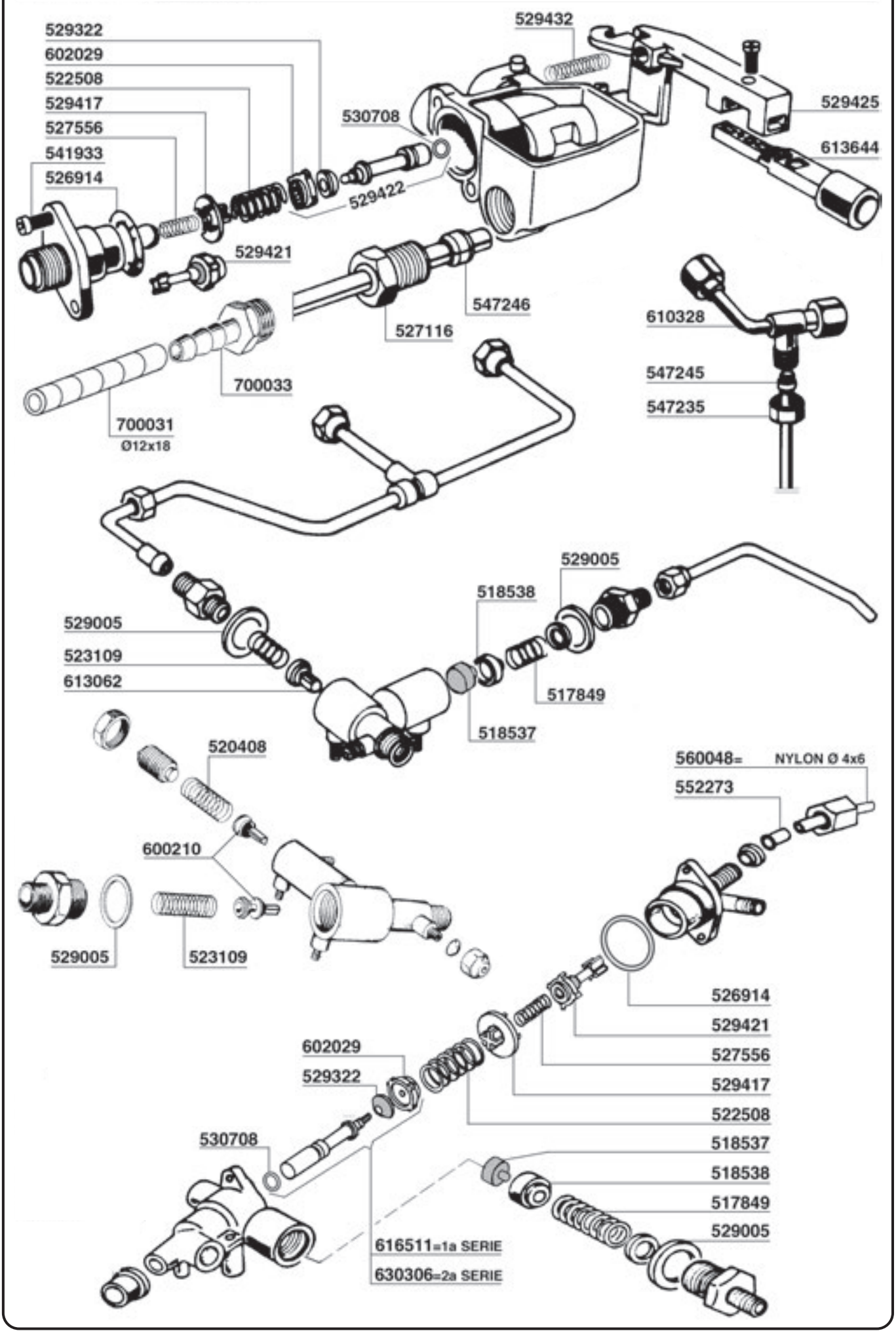
529322
602029
522508
529417
527556
541933
526914
529432
530708
529425
613644
529422
529421
547246
527116
610328
547245
547235
700033
700031
Ø12x18
529005
518538
529005
523109
613062
517849
518537
520408
560048= NYLON Ø 4x6
552273
600210
529005
523109
526914
529421
527556
529417
522508
602029
529322
530708
518537
518538
517849
529005
616511=1a SERIE
630306=2a SERIE

PARTI COMPATIBILI FAEMA Tav. 25

E61-ARIETE-ZODIACO

612143 Ø1.1
612142 Ø1.2
513691
636652 LEGEND JUBILE'
521888
700051
502003
511672
515073
511678
502074
700291
541065
526957
527004
700024
520856 VELOX
526741
524176

FAEMA
E 61

E61 CLASSIC
700115 1/GR ADESIVO/STICKER
700116 2/GR ADESIVO/STICKER
700117 3/GR ADESIVO/STICKER

E61 CLASSIC
506771 1/GR VETRO/GLASS
506773 2/GR VETRO/GLASS
506774 3/GR VETRO/GLASS

CARICO
VAPORE
VAPORE
SCARICO ACQUA
SCALDATAZZE
MASSIMO
MINIMO
RIGENERAZIONE

700094 KIT ADESIVI E61

514826/7

FAEMA
E 61

E61 LEGEND-JUBILE'
506775 1/GR VETRO/GLASS
506776 2/GR VETRO/GLASS
506777 3/GR VETRO/GLASS

524563 225x210 mm

506725 KIT FAEMINA

E61 CLASSIC
524591 1/GR
524592 2/GR
524593 3/GR

E61 LEGEND-JUBILE'
524594 1/GR
524595 2/GR
524596 3/GR

506726 230V - 800+200W FAEMINA

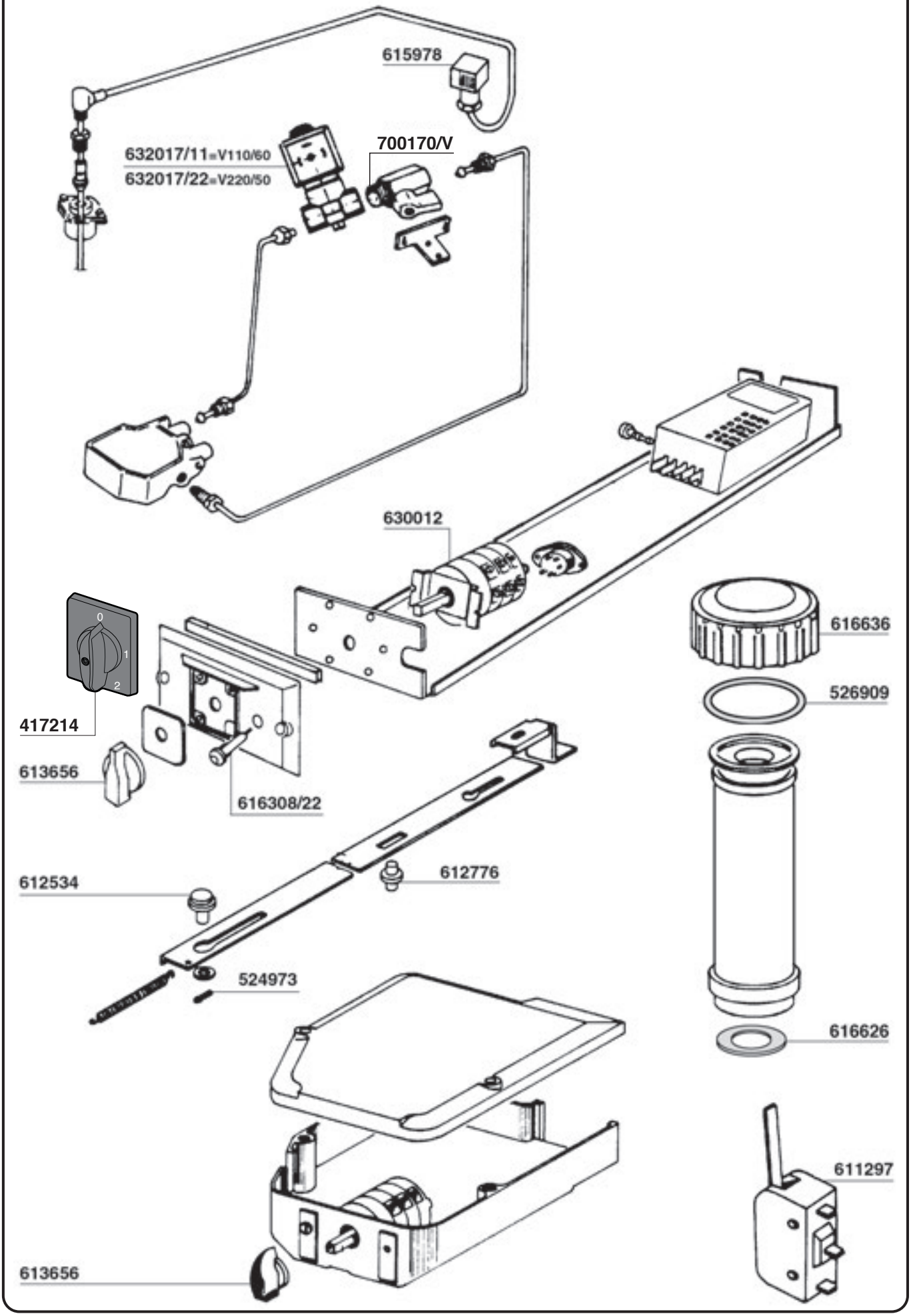
615978
632017/11=V110/60
632017/22=V220/50
700170/V
630012
616636
526909
417214
613656
616308/22
612534
612776
524973
616626
611297
613656

PARTI COMPATIBILI FAEMA Tav. 27

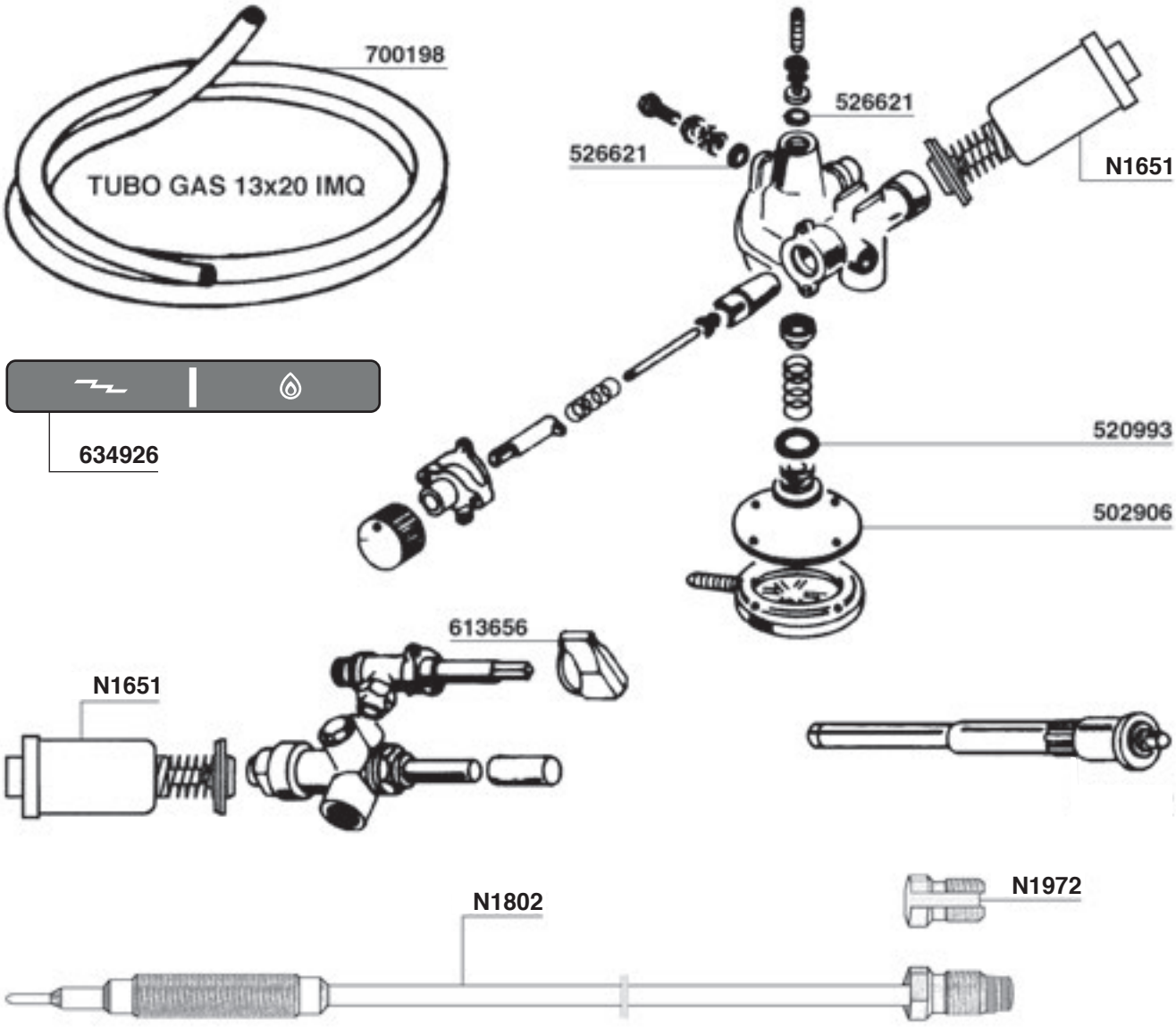

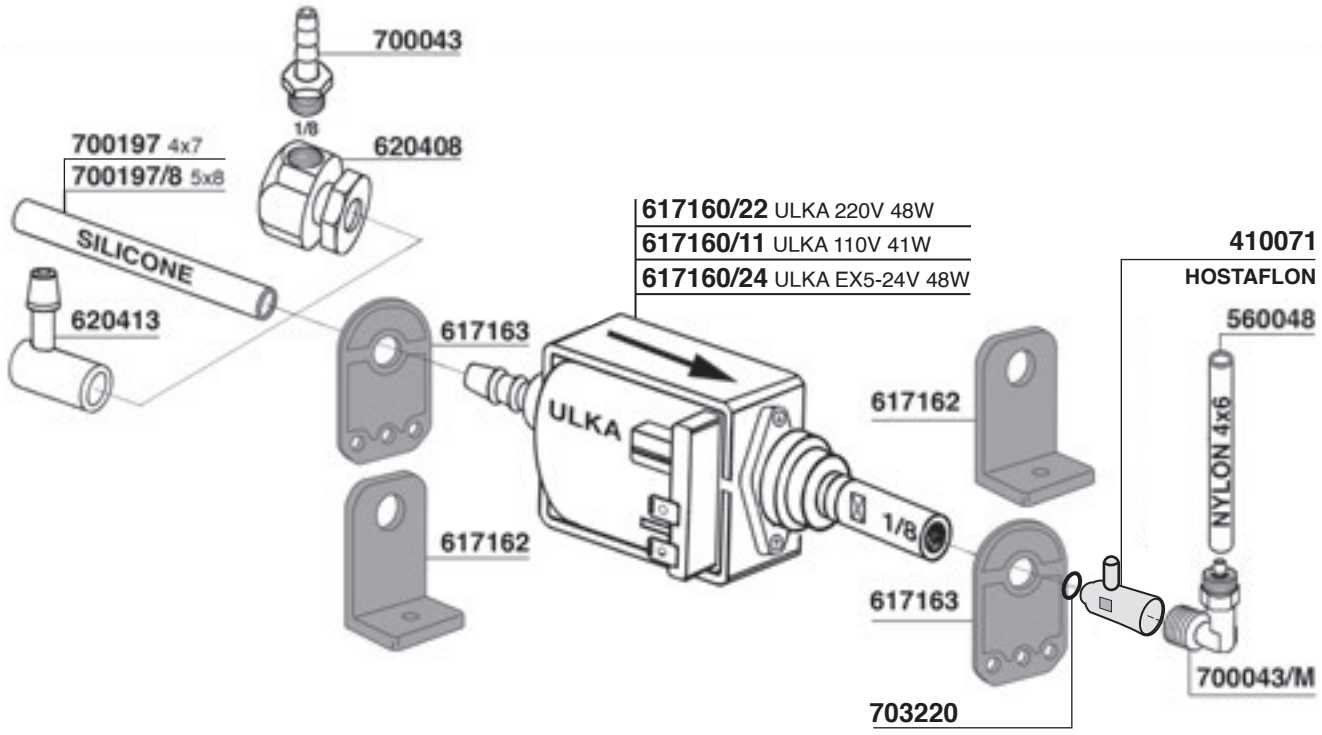

PARTI COMPATIBILI FAEMA Tav. 28

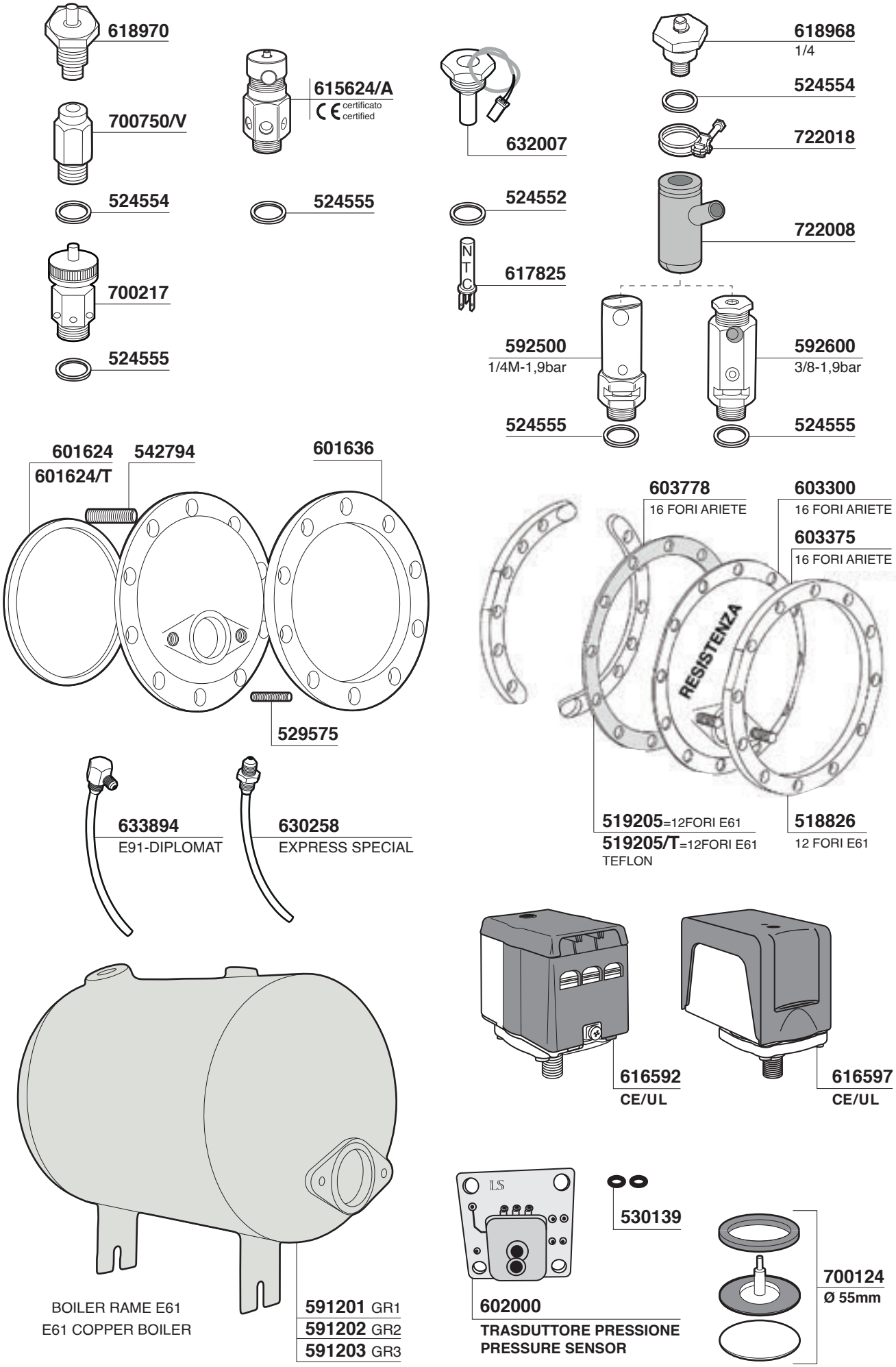

PARTI COMPATIBILI FAEMA Tav. 29

MANOMETRI

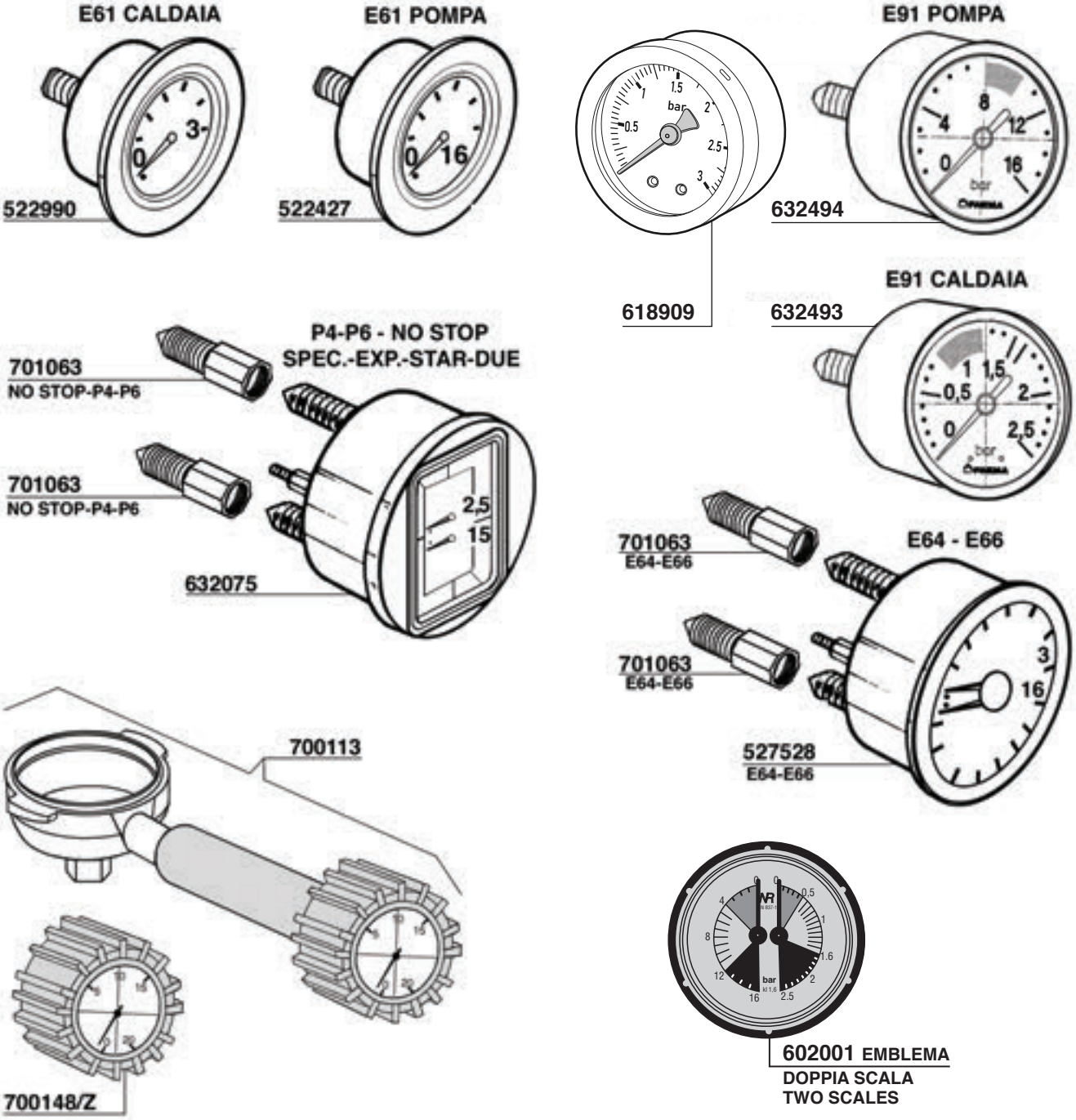

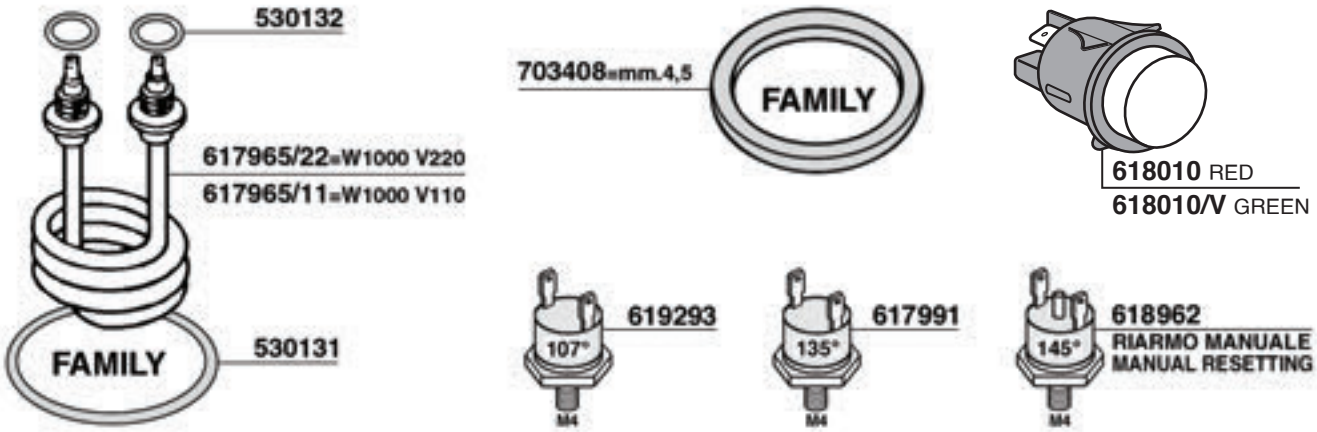

PARTI COMPATIBILI FAEMA Tav. 30

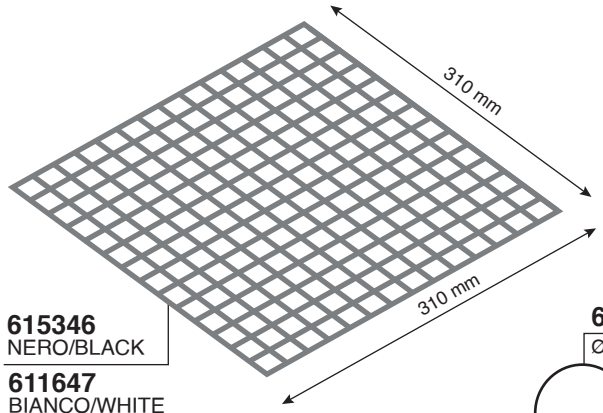

615346
NERO/BLACK
611647
BIANCO/WHITE

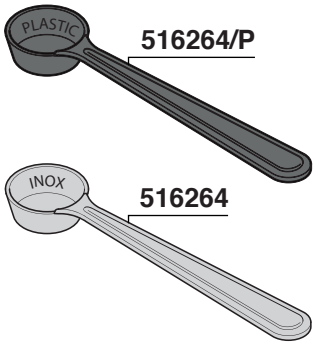

516264/P

516264

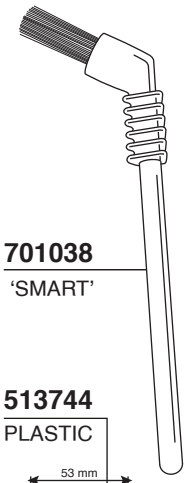

701038
'SMART'

620438F
Ø58 mm.

ALUMINIUM

620867
Ø57,5 mm.

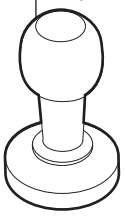

WOOD-STAINLESS STEEL

513744
PLASTIC

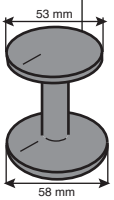

GOMMA NERA - BLACK RUBBER

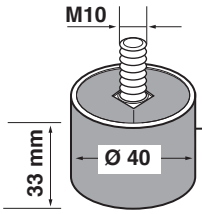

615417

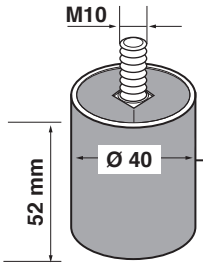

632404

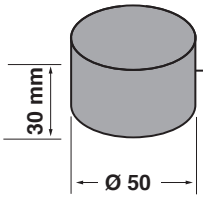

618377

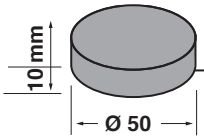

617622

PLASTICA NERA - BLACK PLASTIC

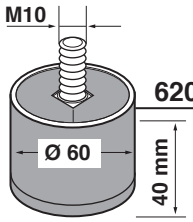

620414

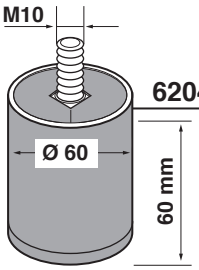

620415

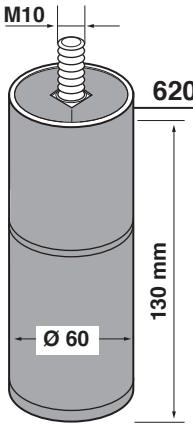

620417

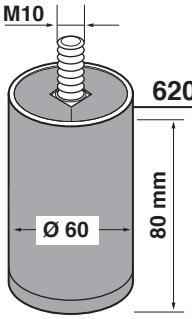

620416

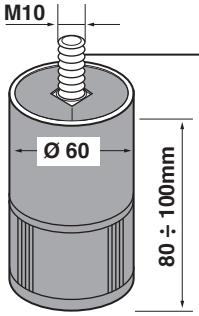

620416/R
REGOLABILE
ADJUSTABLE

620417/R
REGOLABILE
ADJUSTABLE

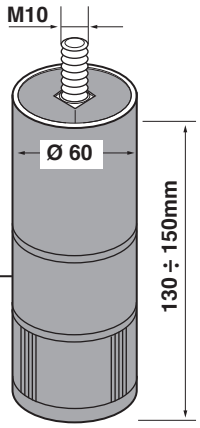

PARTI COMPATIBILI FAEMA Tav.31

RESISTENZE

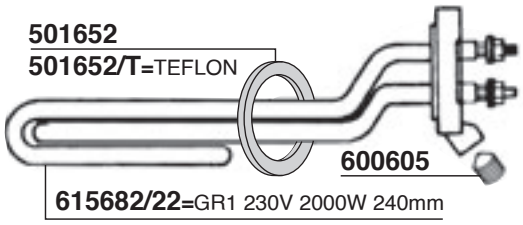

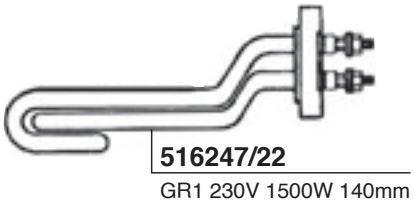

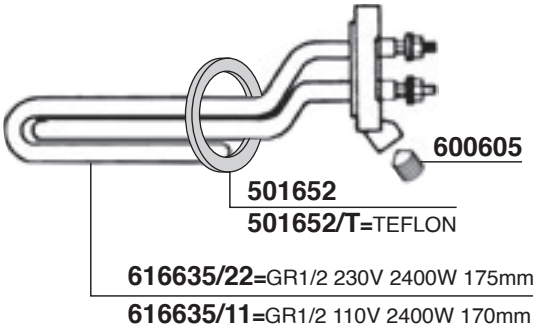

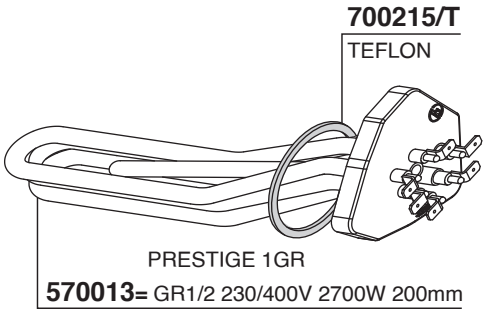

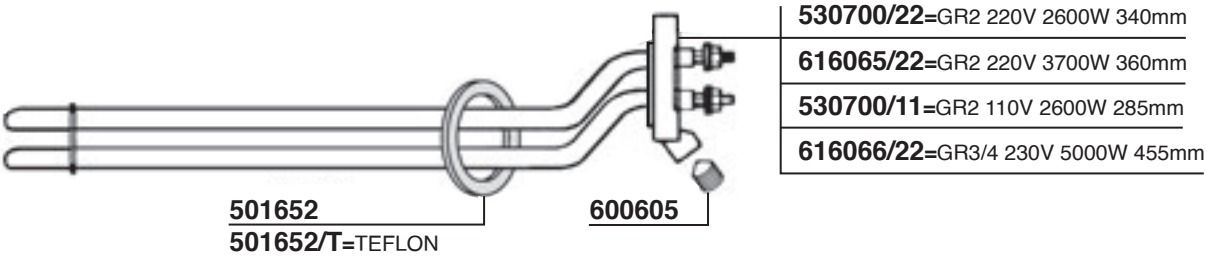

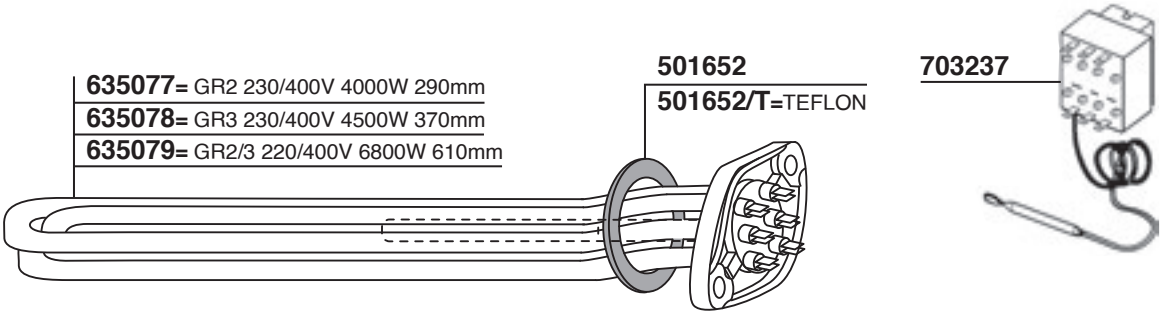

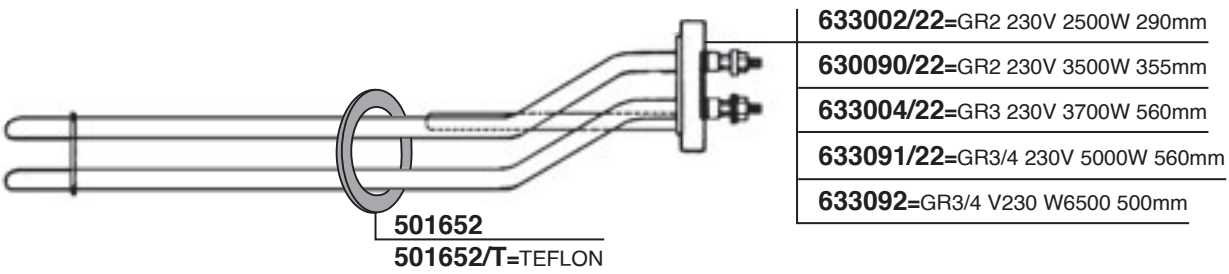

ELETTROPOMPE

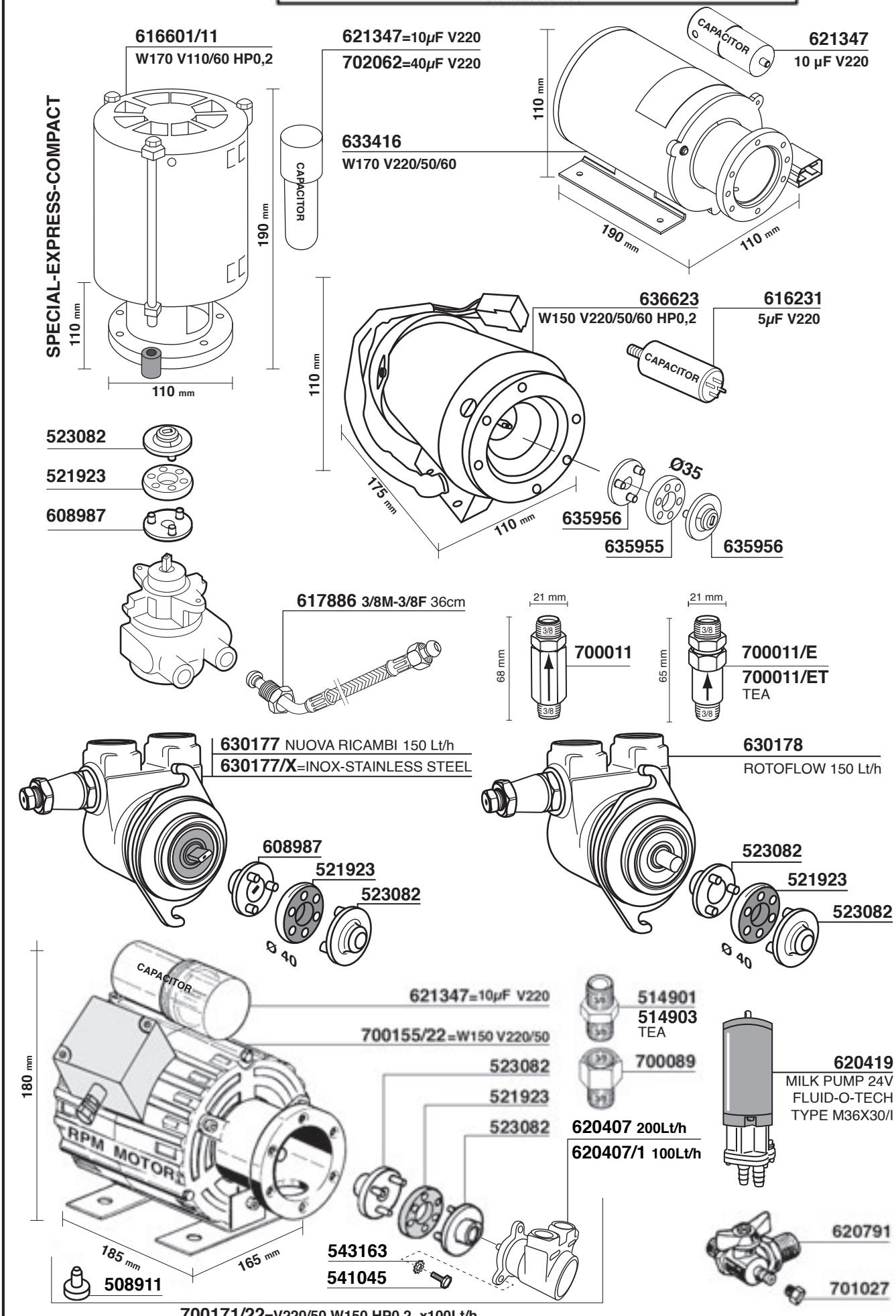

PARTI COMPATIBILI FAEMA Tav.33

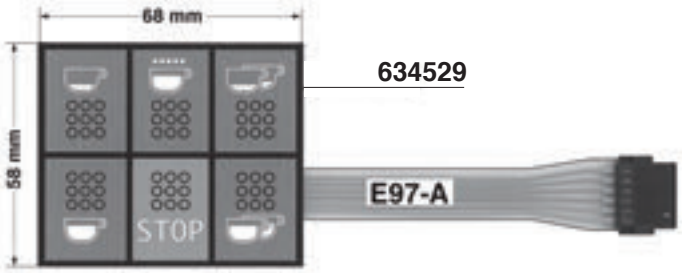

634529

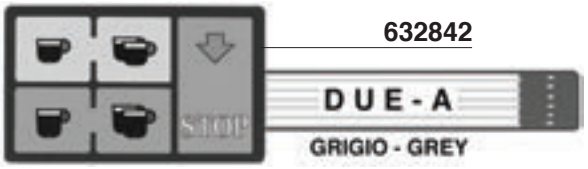

632842

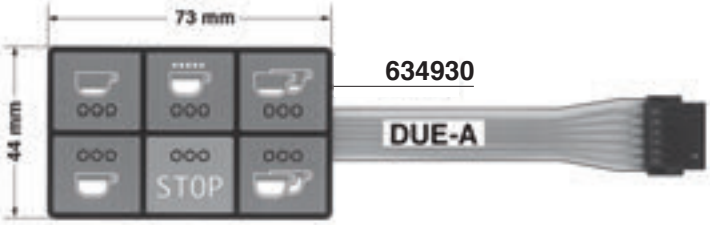

634930

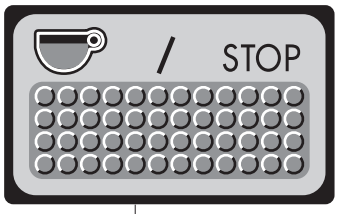

619002
DUE/SMART - S

634927

619003
DUE/SMART - A

591540

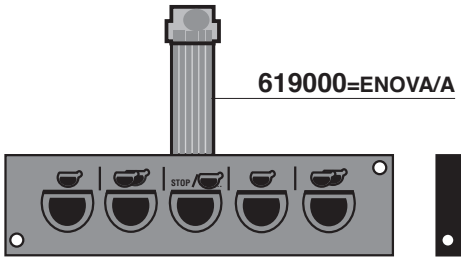

619000=ENOVA/A

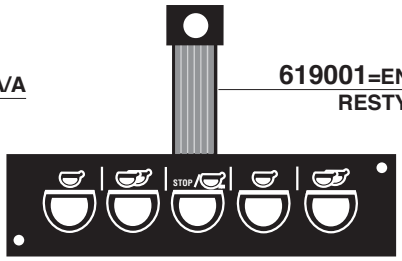

619001=ENOVA RESTYLING

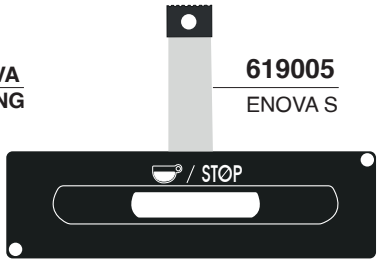

619005
ENOVA S

619006
E98 RE

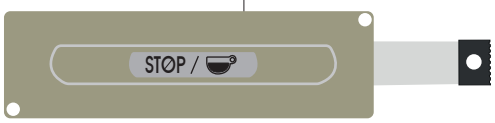

619007
SMART - R/A

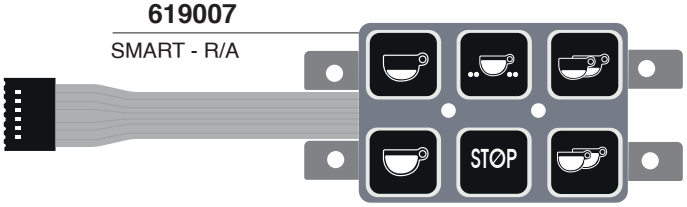

607008
E61AS/E61JUBILE

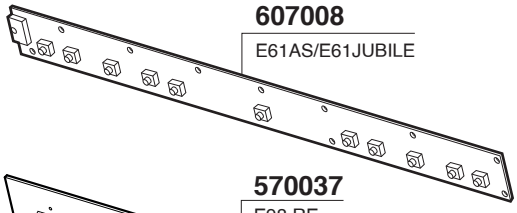

570037
E98 RE

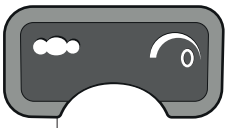

534961
E98A

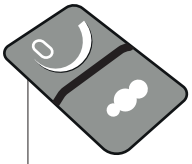

534917
E98S

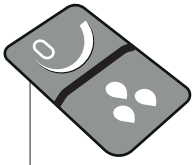

534918
E98S

AUTOFILL ELECTRONIC CARD
SCHEDA AUTOLIVELLO

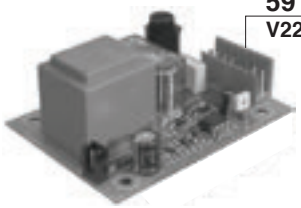

591000
V220

SCHEDA ELETTRONICA UNIFICATA
UNIEFED ELECTRONIC CARD

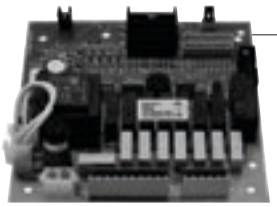

591549
DUE-DUE SMART-E61 JUBILE'
E91-E92 COMPACT-E97
STYLEMA - E98 PRESIDENT/A

700608
M39 - M39GT

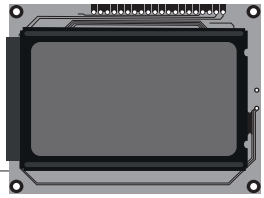

FC 31 MINERVA-TOSTAPANE EGI

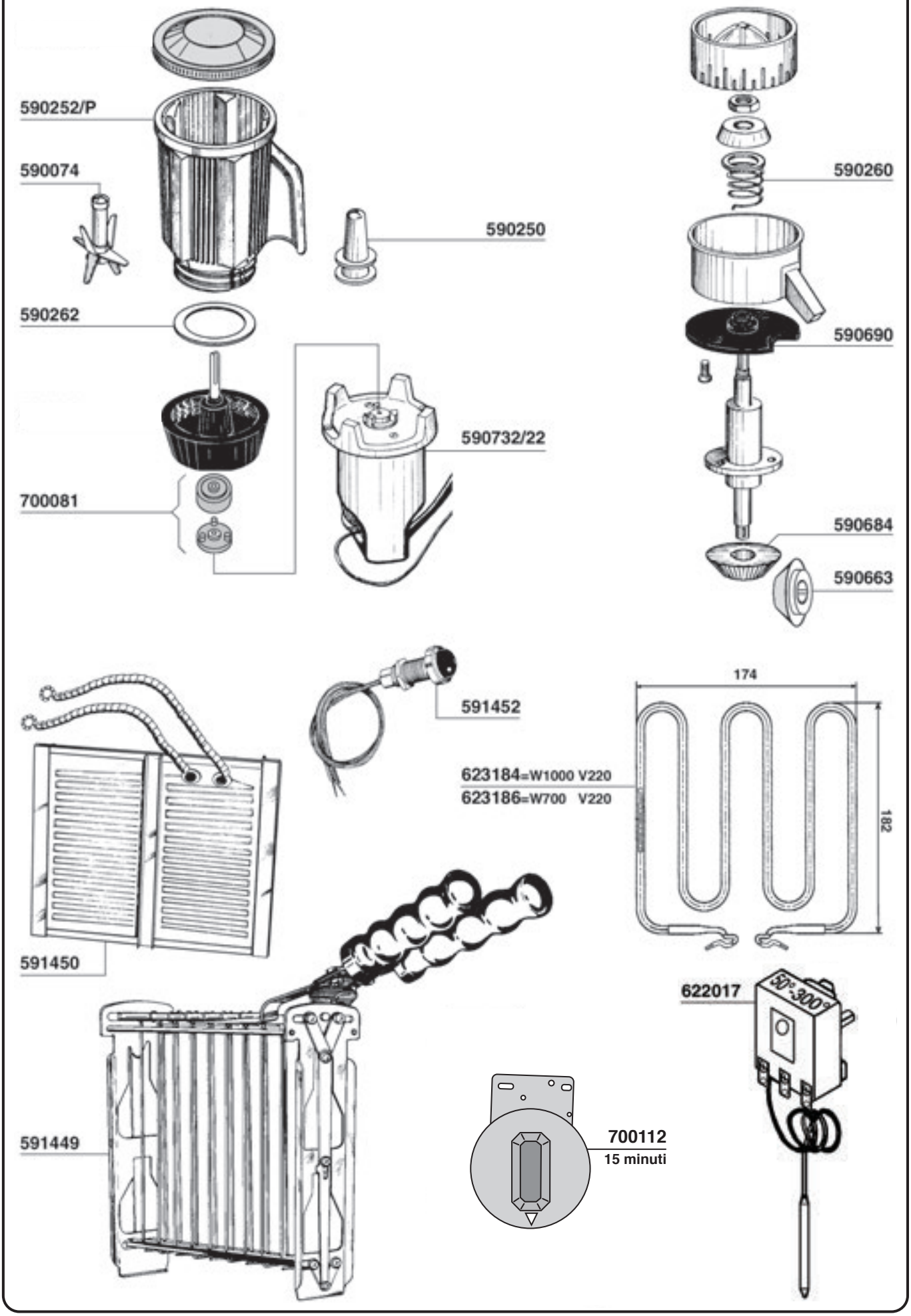

FIAMMA RST

Tav.01

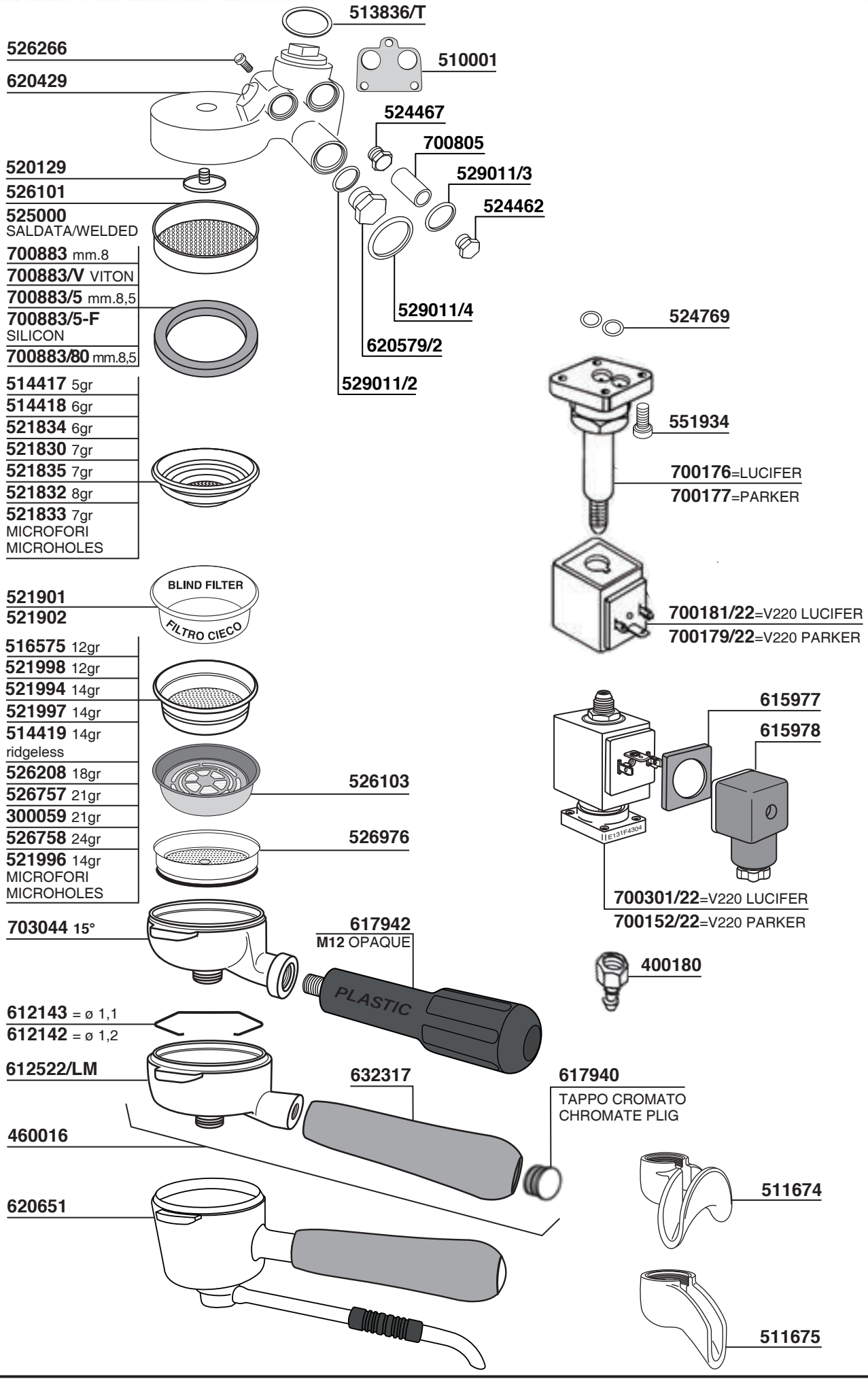

FIAMMA RST

Tav. 02

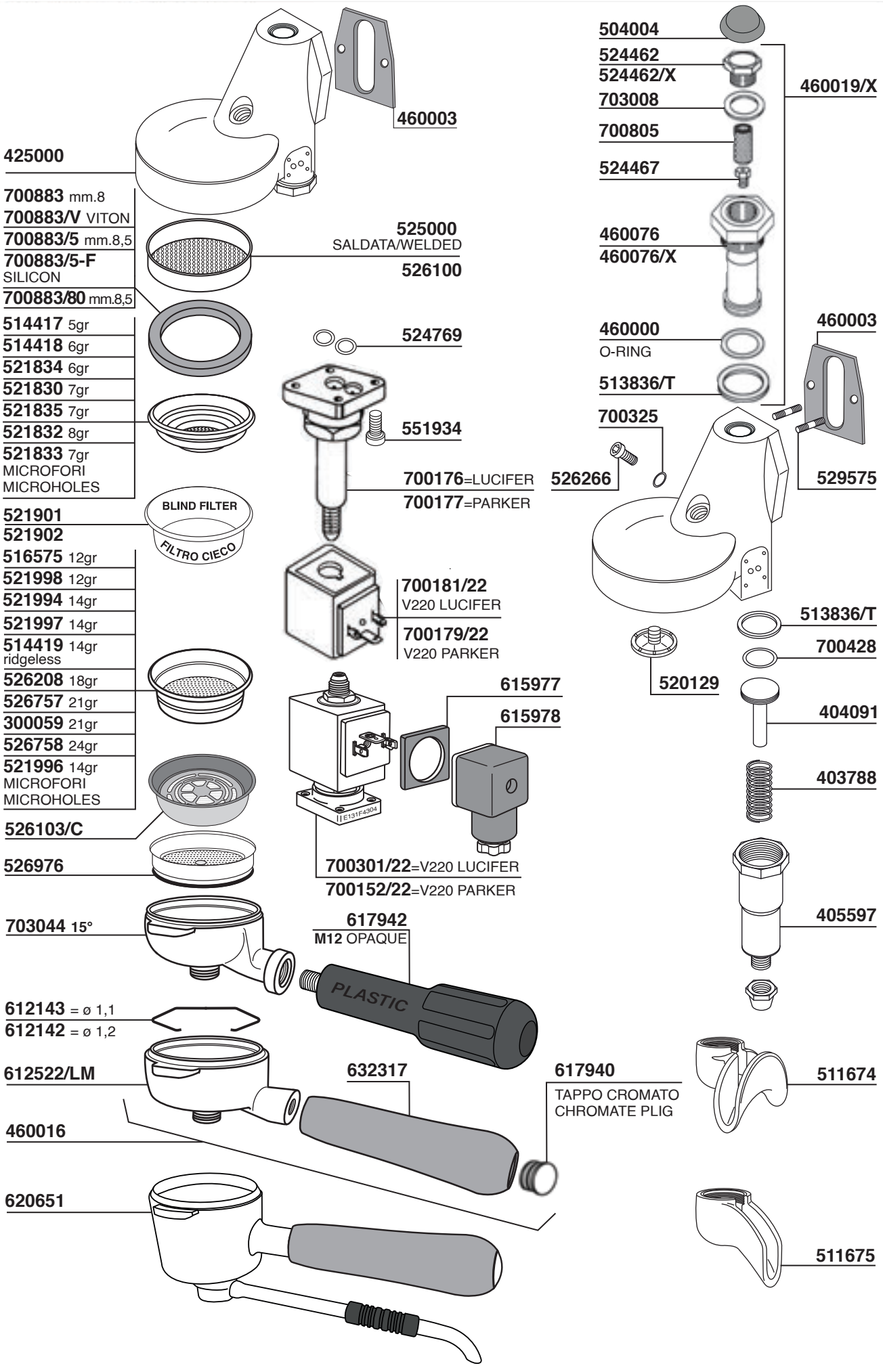

FIAMMA RST

Tav. 03

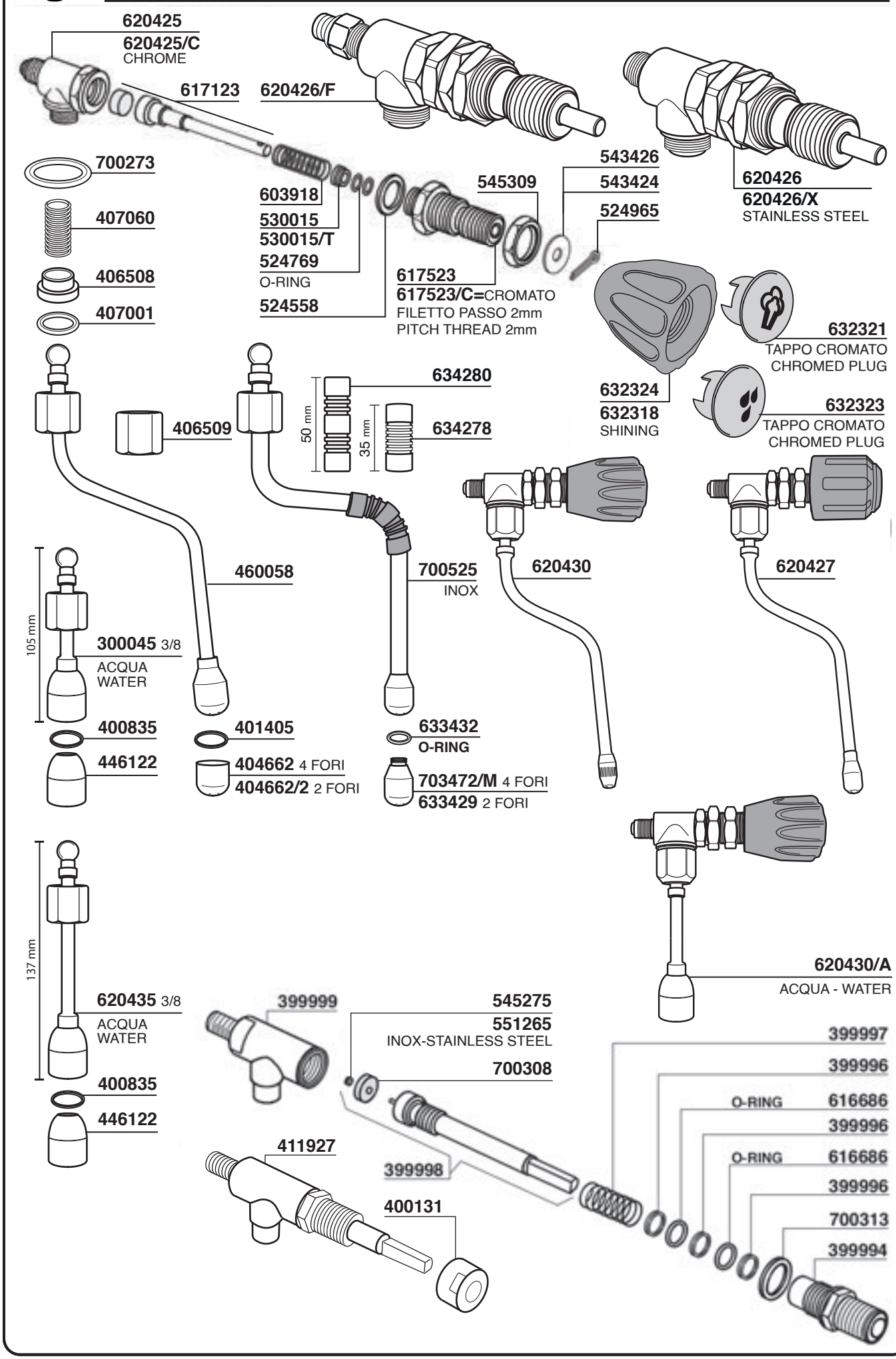

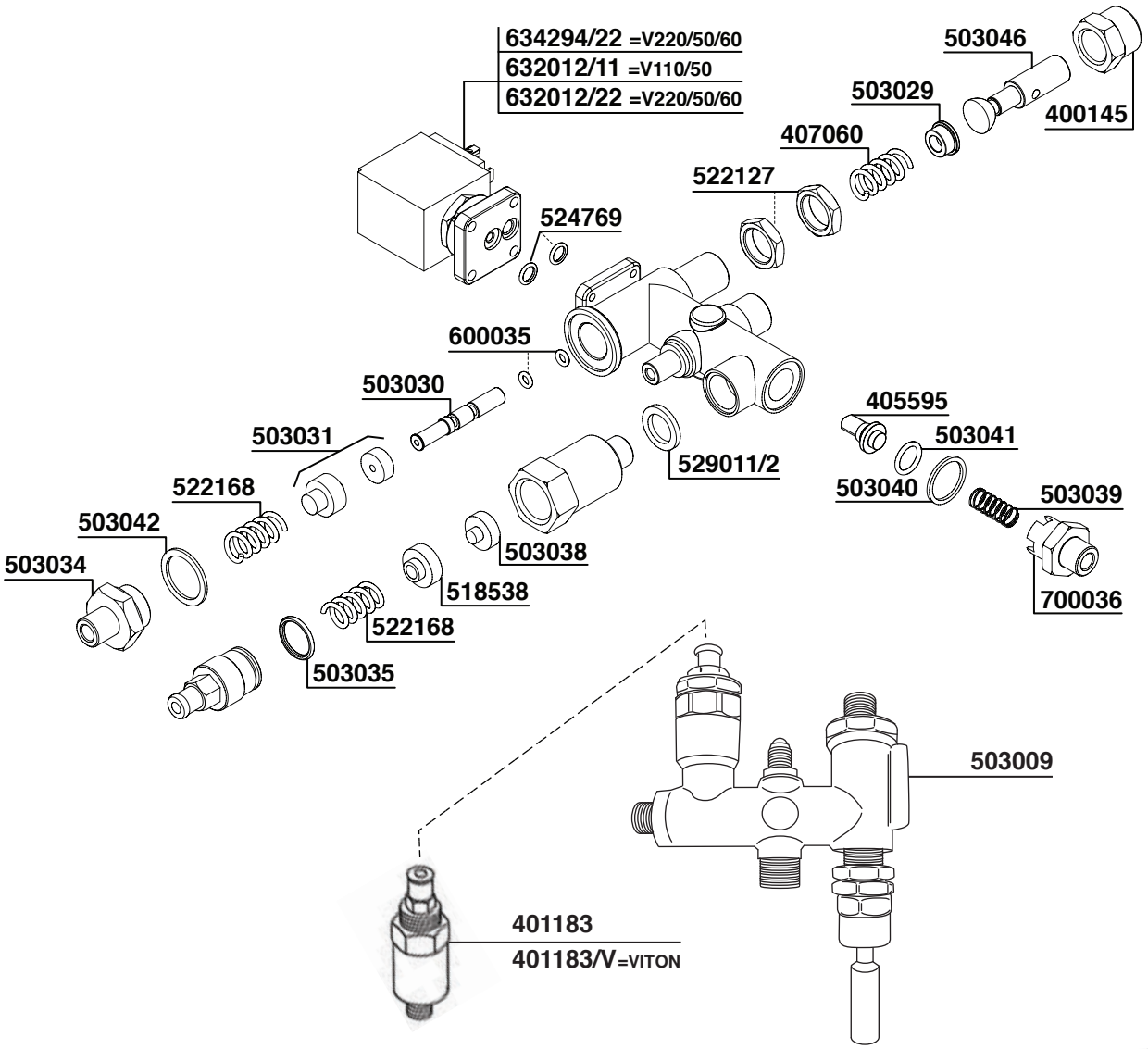
634294/22 =V220/50/60
632012/11 =V110/50
632012/22 =V220/50/60
503046
503029
400145
407060
522127
524769
600035
503030
405595
503041
503031
529011/2
503040
503039
522168
503042
503038
503034
518538
700036
522168
503035
503009
401183
401183/V=VITON

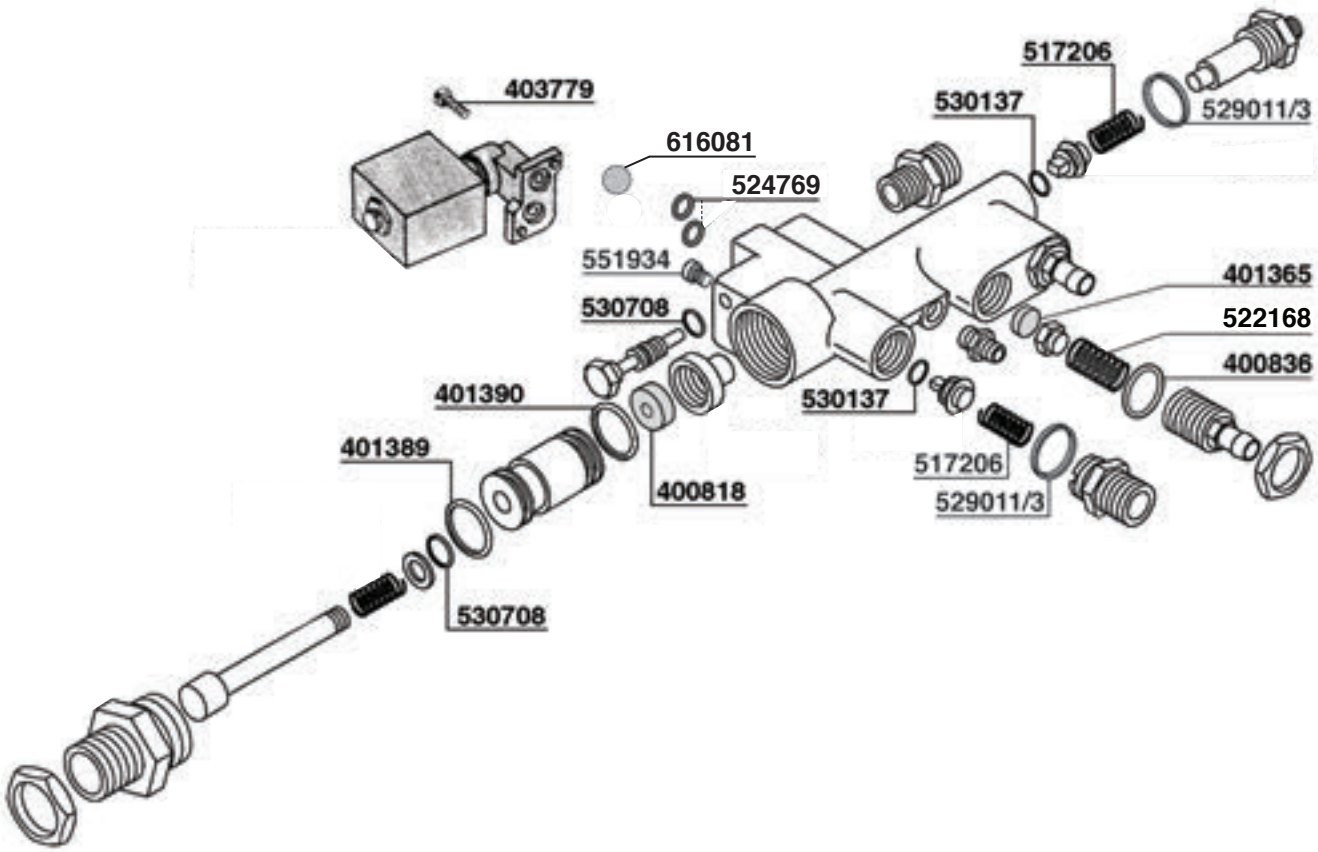
517206
403779
530137
529011/3
616081
524769
551934
401365
530708
522168
400836
401390
530137
401389
517206
400818
529011/3
530708

FIAMMA RST

Tav. 05

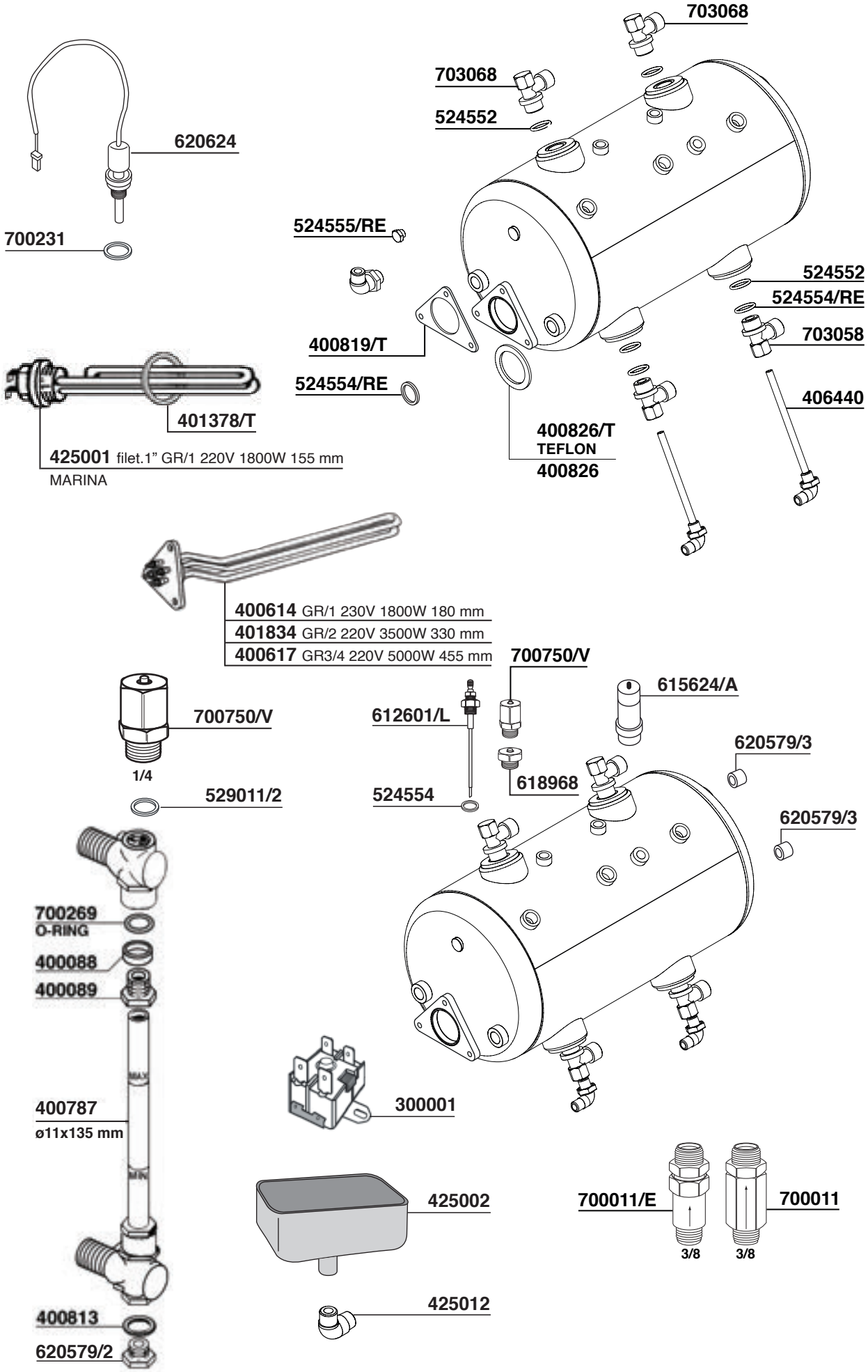

FIAMMA RST

Tav. 06

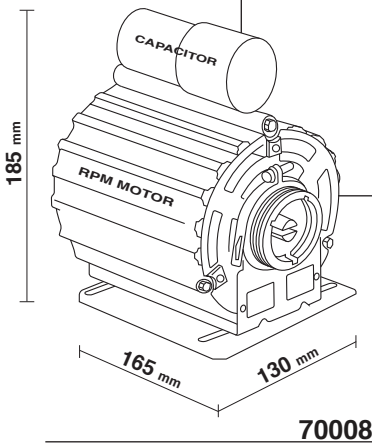

621347
CAPACITOR
CONDENSAT.
10 μF

700084/22
V220/50/60 W165 HP0,2 WITH CABLE

700086/22=V220/50/60 W150 HP0,2
700086/11=V110/60 W120 HP0,1

621112=6,3μF 220V
621113=25μF 110V

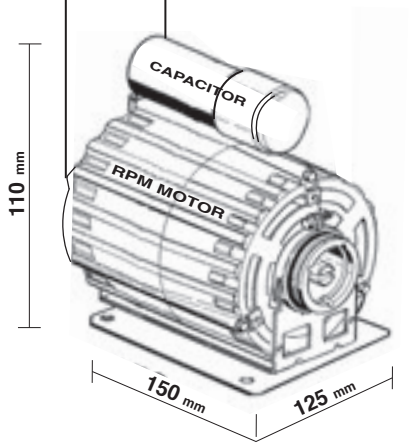

MOTORE PICCOLO - SMALL MOTOR

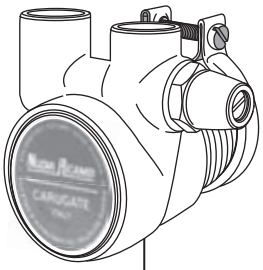

700055 100 Lt/h

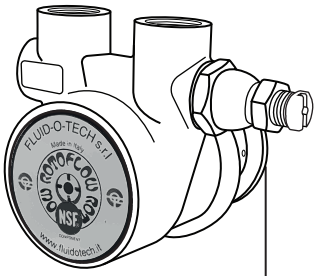

620406 150 Lt/h
620406/X 150 Lt/h INOX-STAINLESS STEEL
620406/1 100 Lt/h

700050

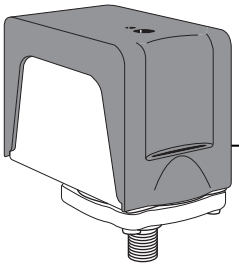

616597

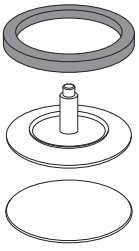

700124

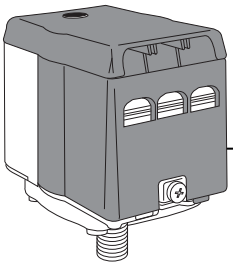

616592

400737
BAR-CENTURY

BOILER

700594/T
Ø40mm.
TE93

POMPA

700595/T
Ø40mm.
TE93

FIAMMA RST

Tav. 07

617902

620405/C

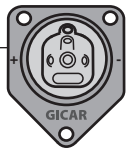

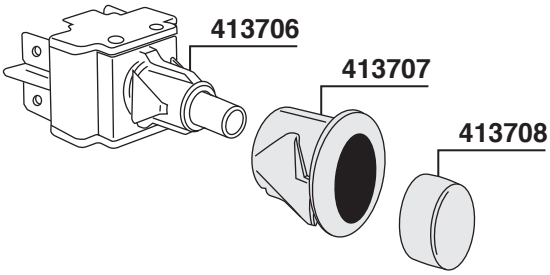

615978/T

615979

617903/G

530148

551937

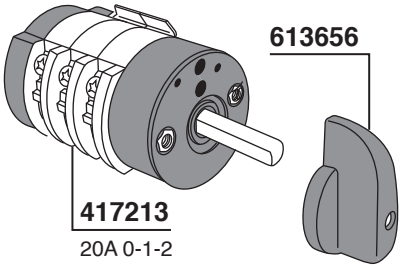

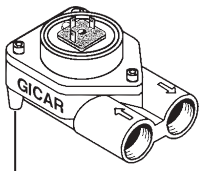

620405 1/4" UL-NSF METAL

620404 1/8" UL-NSF METAL

404992=20A

401871 F8 220V

607267 = F8

ARANCIO
ORANGE

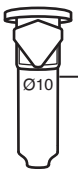

402627
COVER

VERDE
GREEN

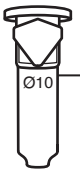

402628
COVER

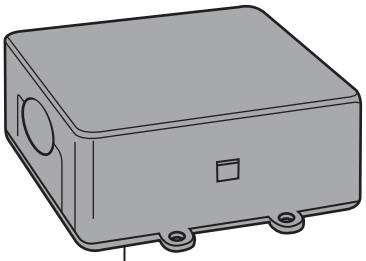

425003
GICAR CODE 9.5.32.37 G00

425013
GICAR CODE 9.5.33.75G

VERDE
GREEN

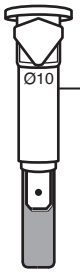

ROSSO
RED

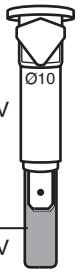

617732 220V
617732/11 110V

617730 220V
617730/11 110V

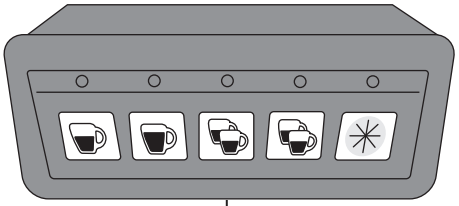

301000

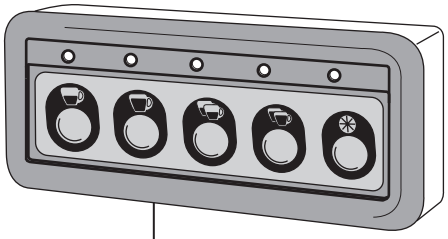

620736 16 PIN

GICAR CODE 9.9.08.83G

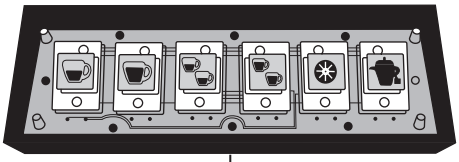

425007

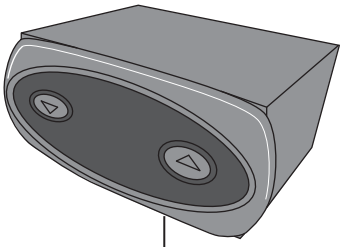

425006

9.3.00.50.G11

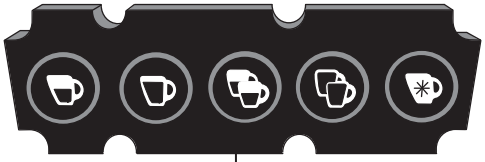

425005

GICAR CODE 9.9.14.95.G

425008

9.9.14.04.G

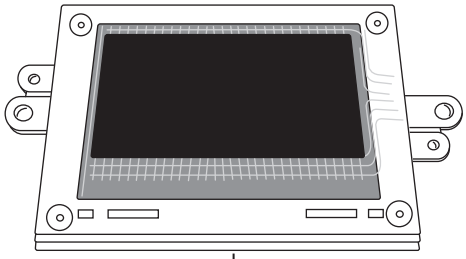

425009

8.8.74.04.G

425010

9.5.13.70.G

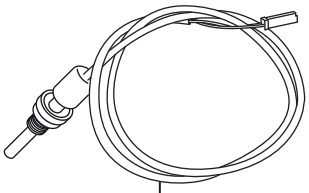

425011

FUTURMAT ARIETE

Tav. 01

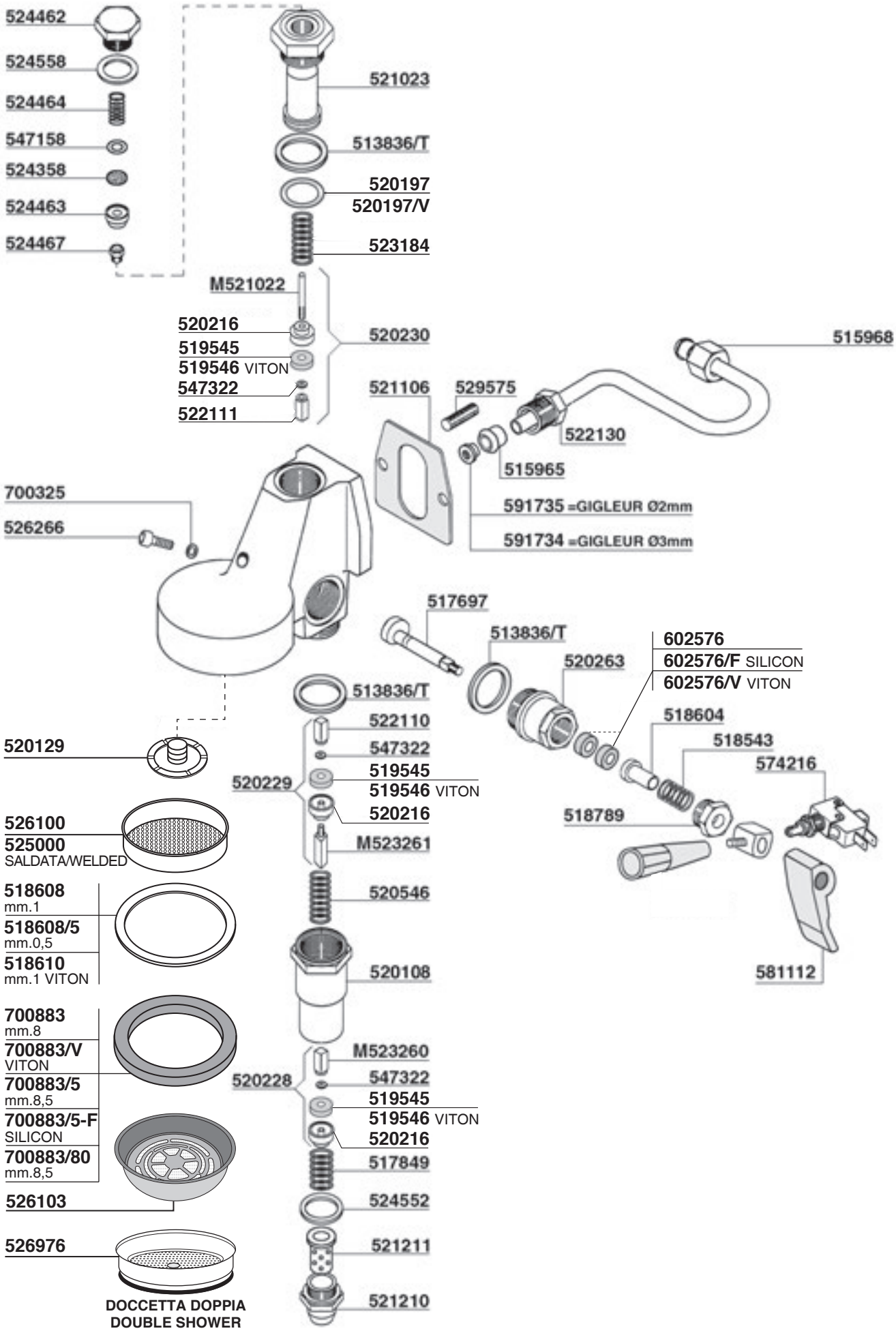

FUTURMAT ARIETE

Tav. 02

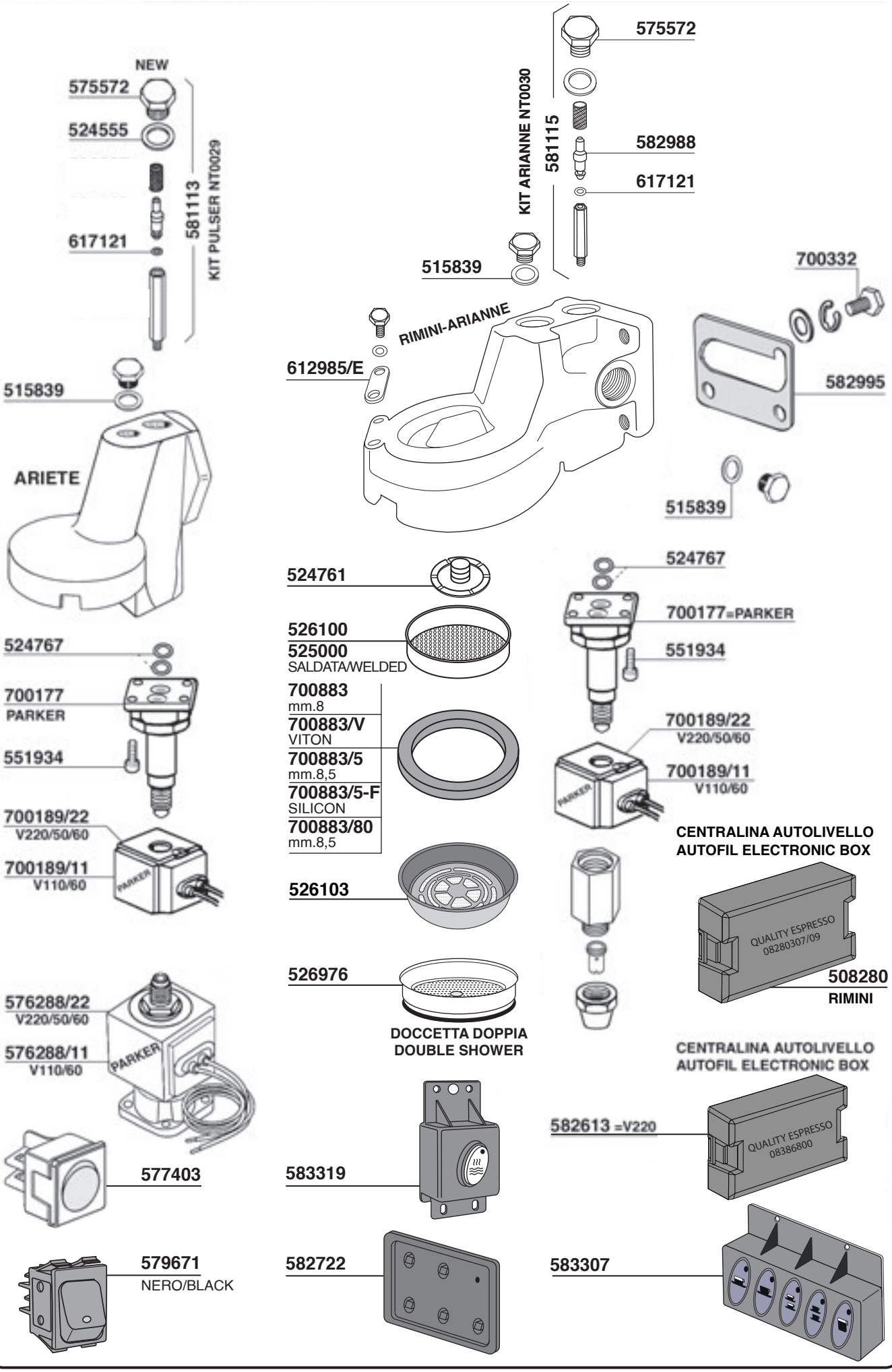

FUTURMAT ARIETE Tav. 03

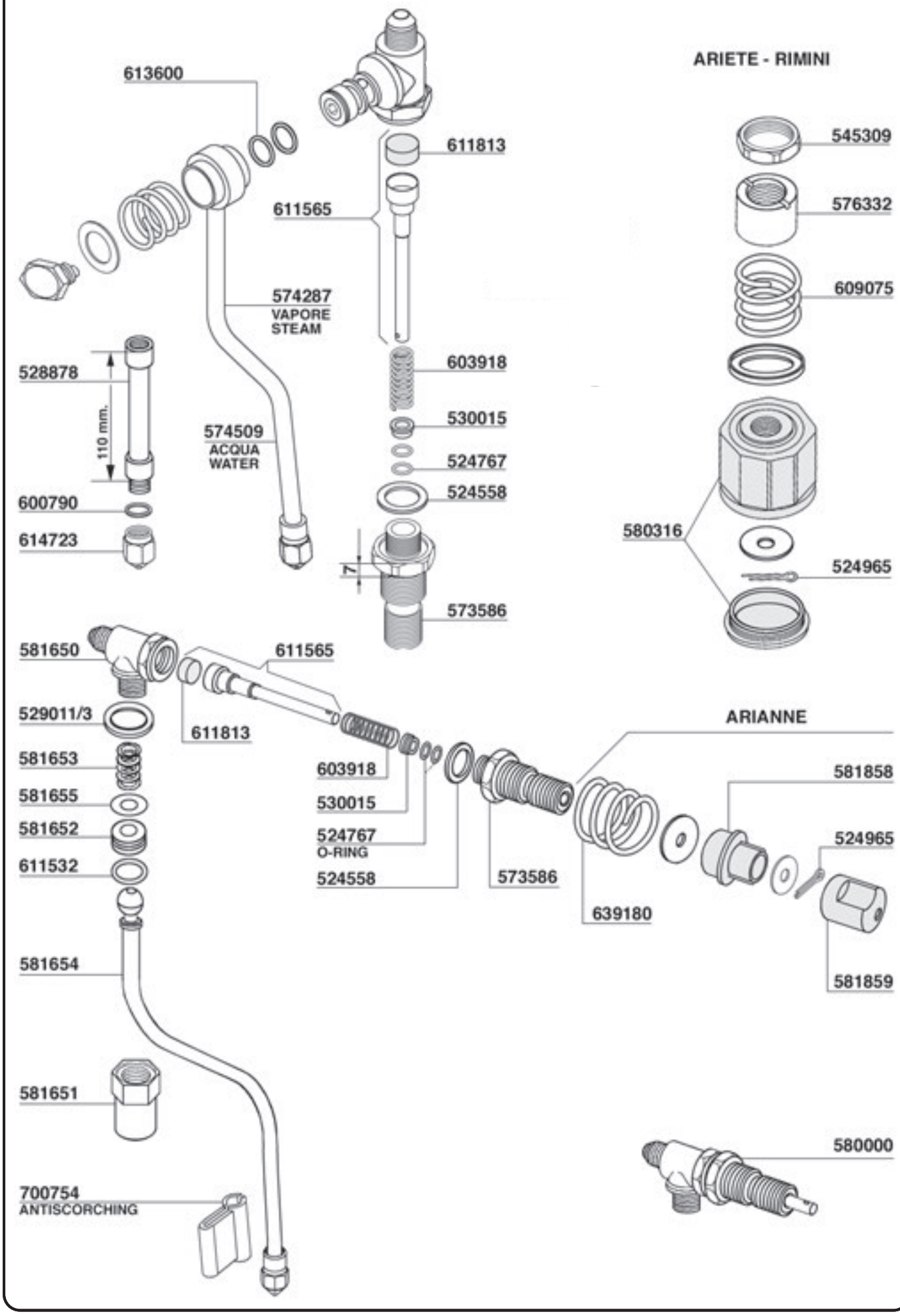

FUTURMAT ARIETE

Tav. 04

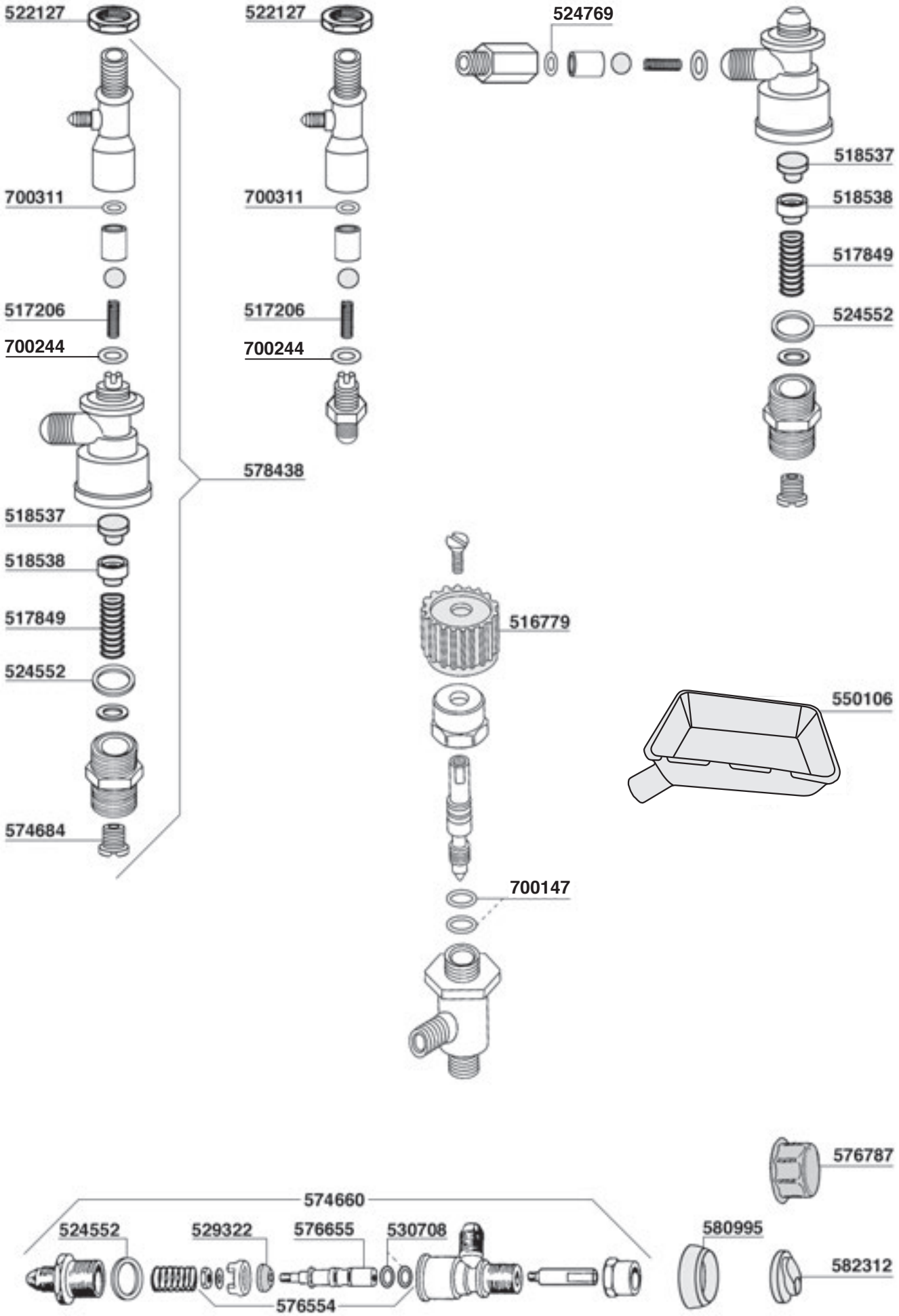

FUTURMAT ARIETE Tav. 05

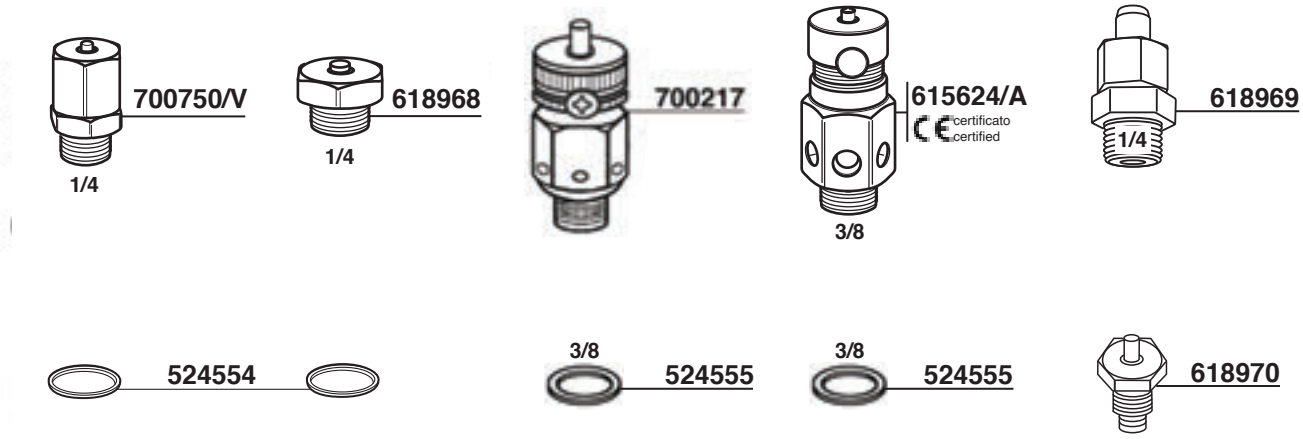

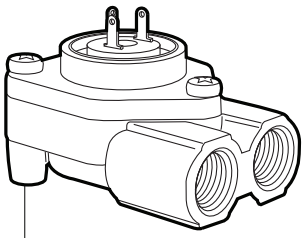

581110 CON LED/WITH LED
GICAR CODE 9.0.24.03

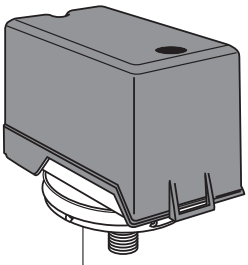

616599 CE/UL
PARKER

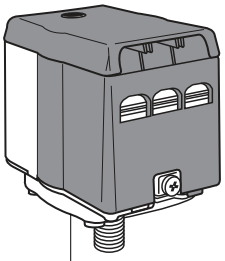

616592
CE/UL

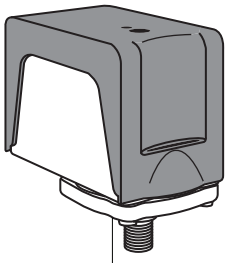

616597
CE/UL

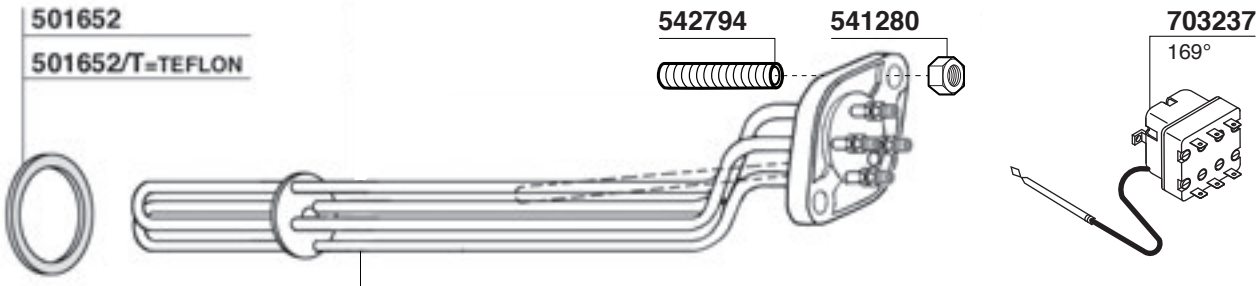

575123= GR1-2 3000W 220V 260mm
630090/22= GR2 3500W 220V 390mm
633004/22= GR3 3700W 220V 580mm

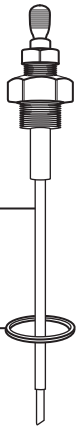

612601 120mm

524554

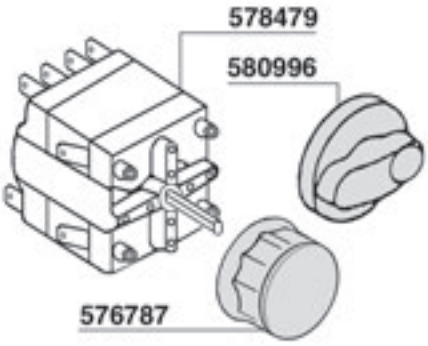

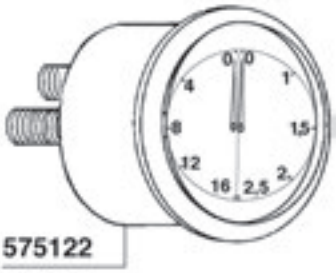

FUTURMAT ARIETE

Tav. 06

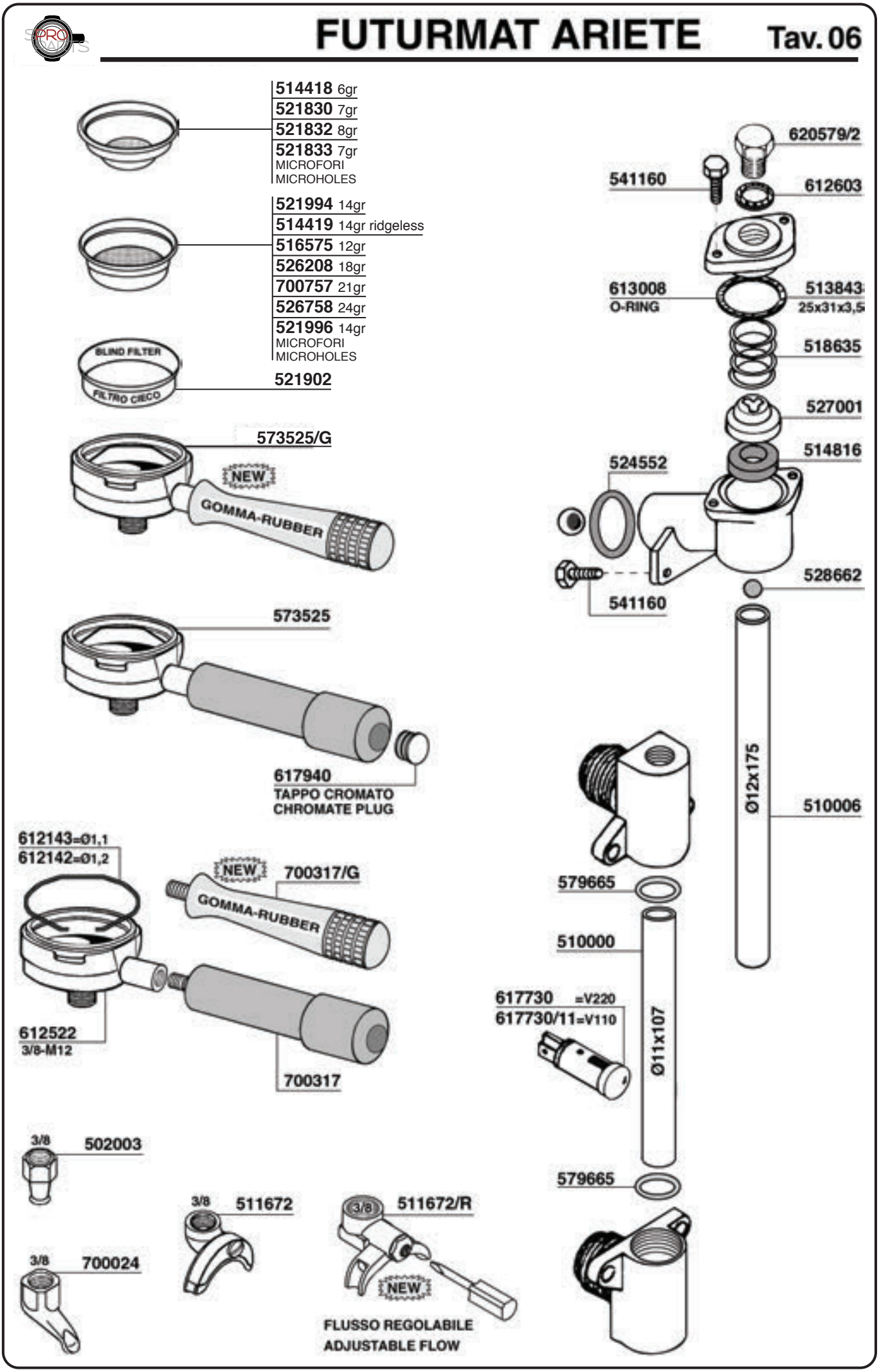

GAGGIA

Tav. 01

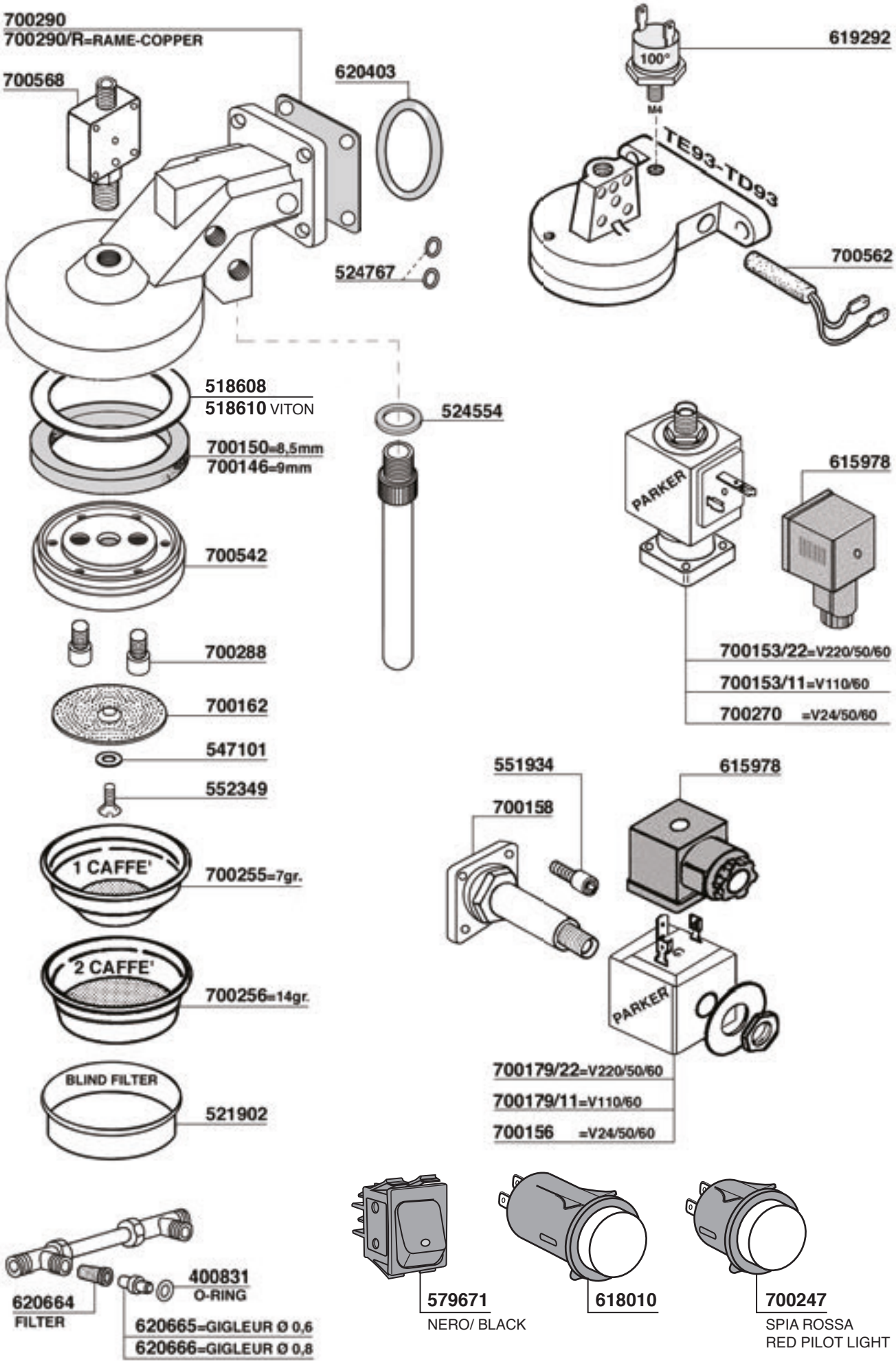

GAGGIA

Tav. 02

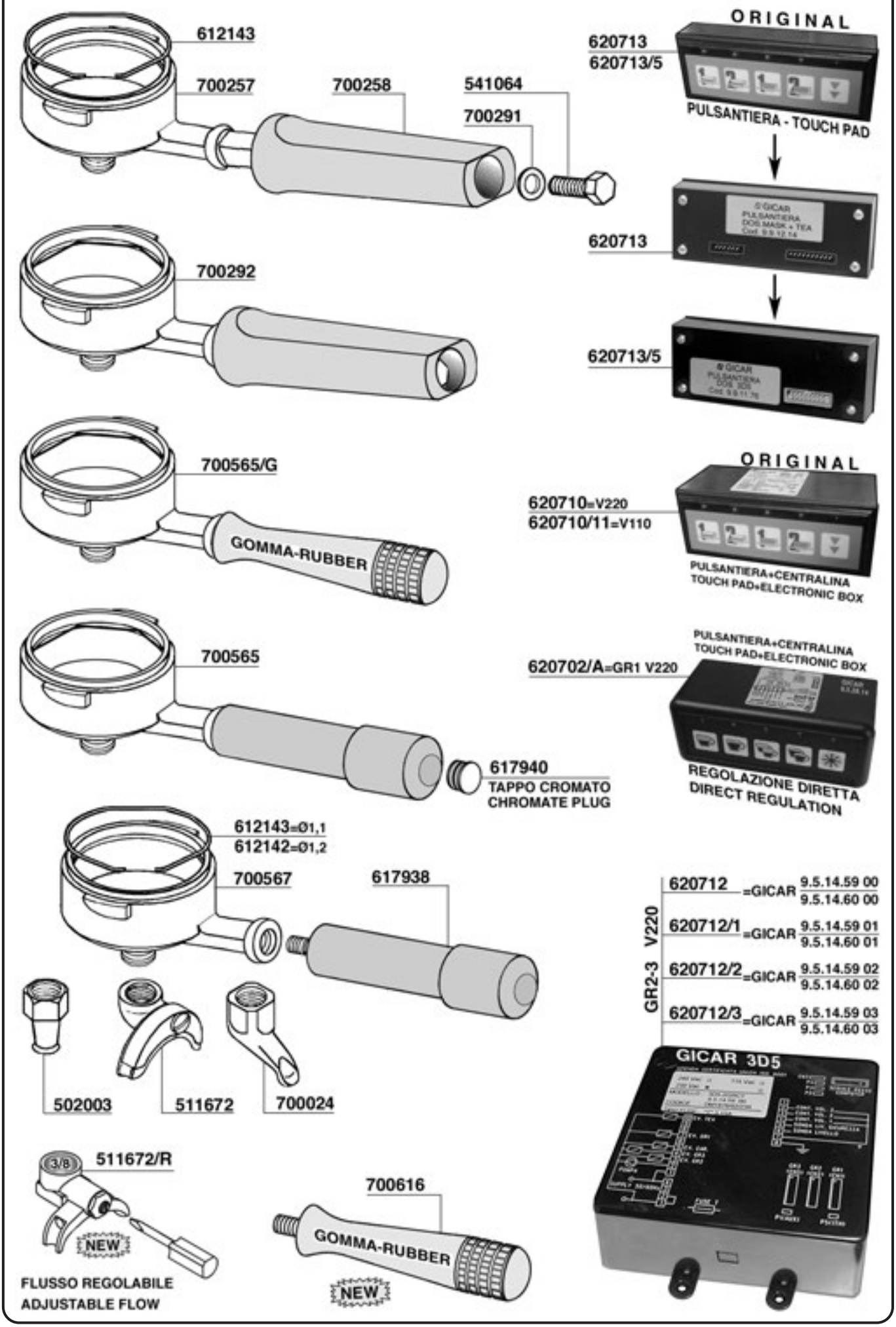

GAGGIA

Tav. 03

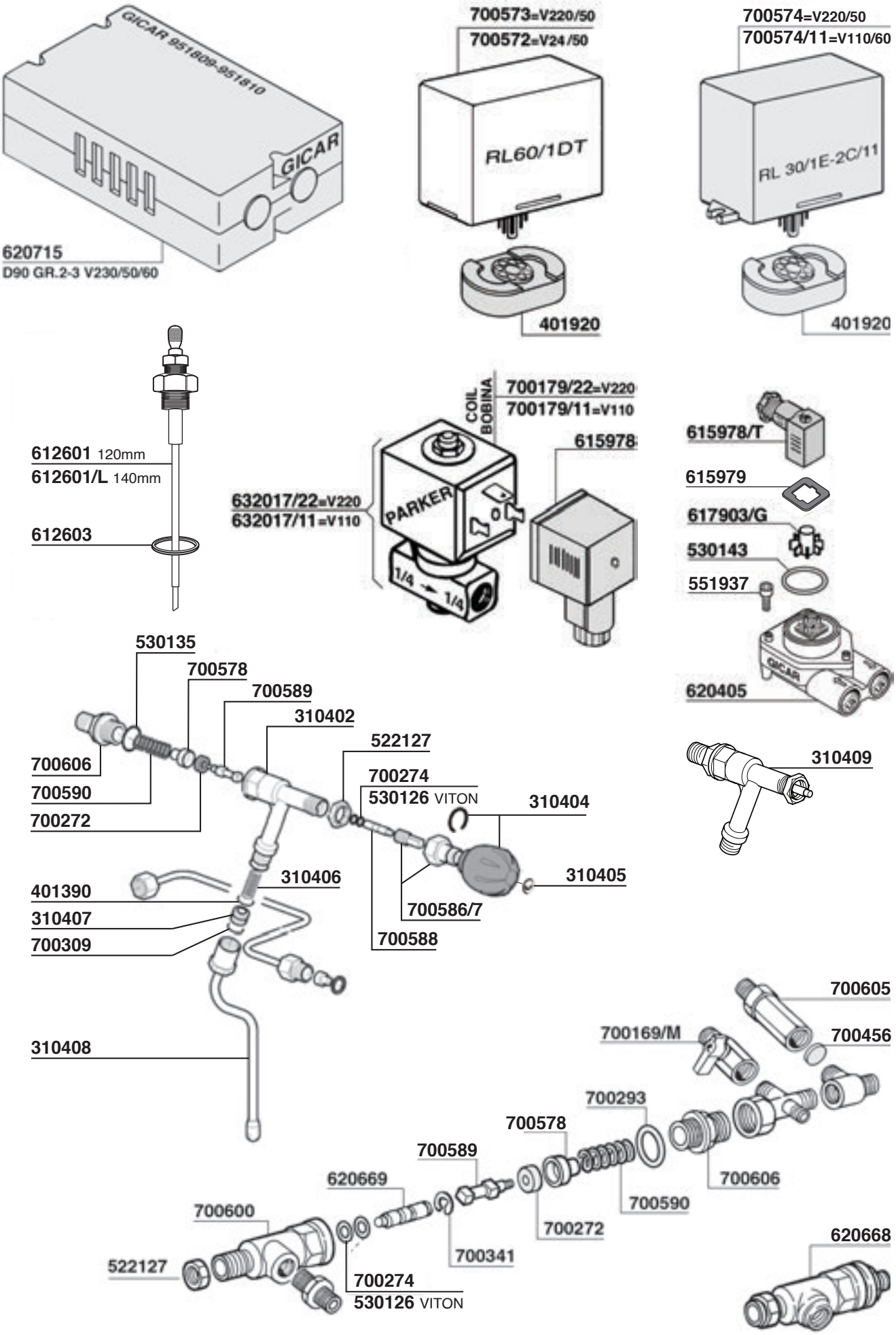

GAGGIA

Tav. 04

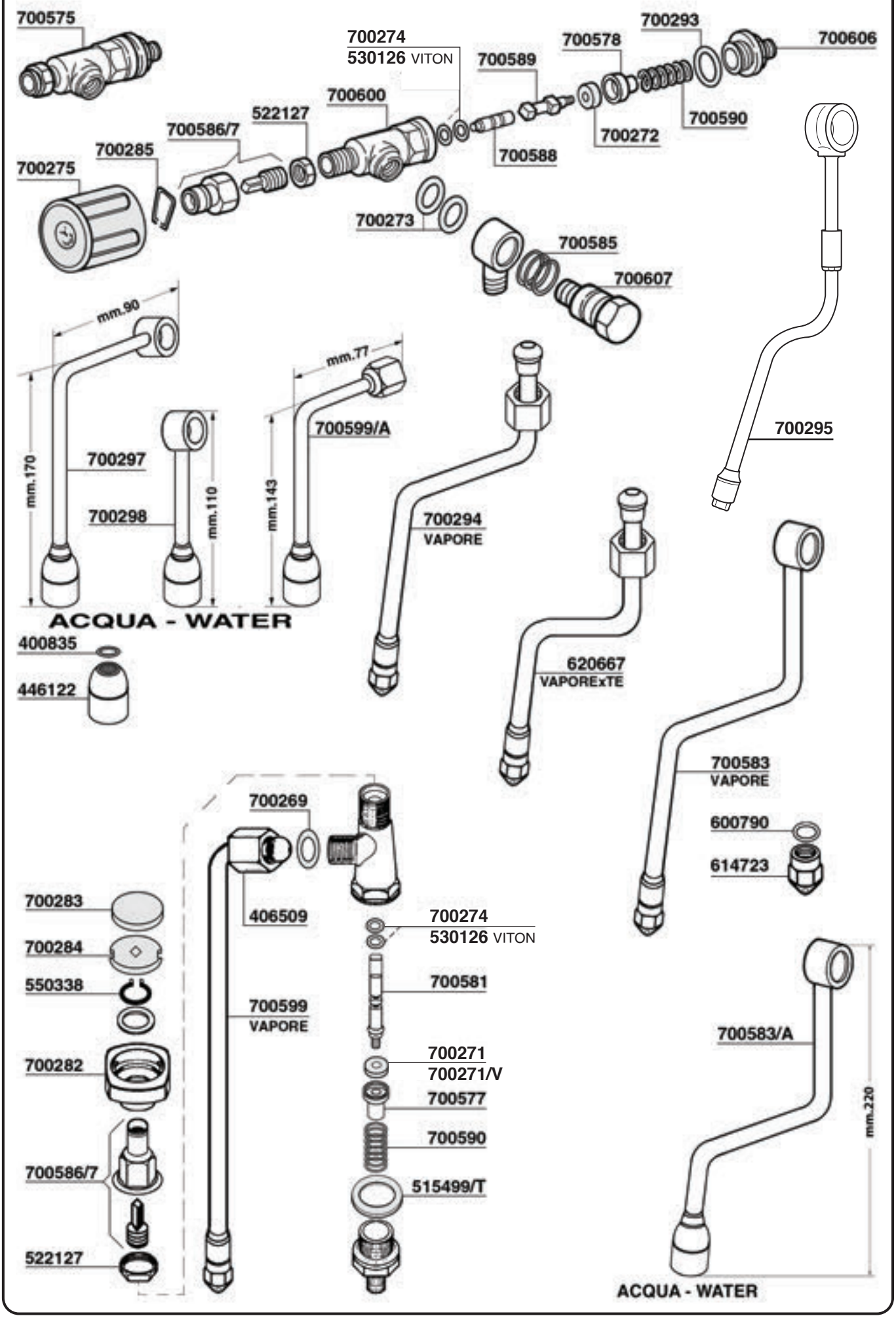

GAGGIA

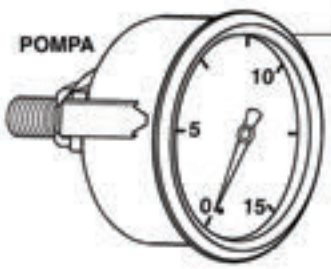
POMPA
700595
Ø52mm.

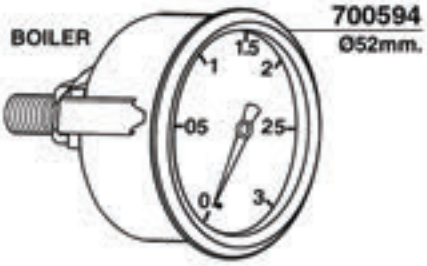
BOILER
700594
Ø52mm.

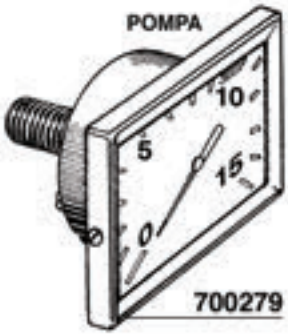
POMPA
700279

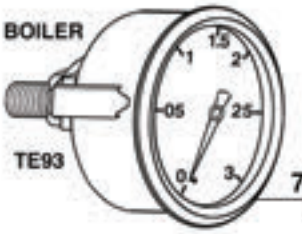
BOILER
TE93
700594/T
Ø40mm.

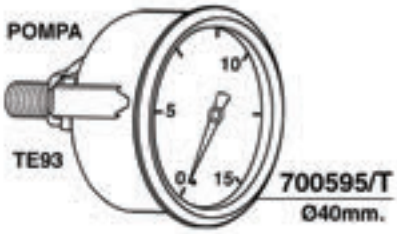
POMPA
TE93
700595/T
Ø40mm.

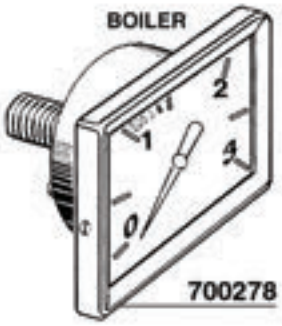
BOILER
700278

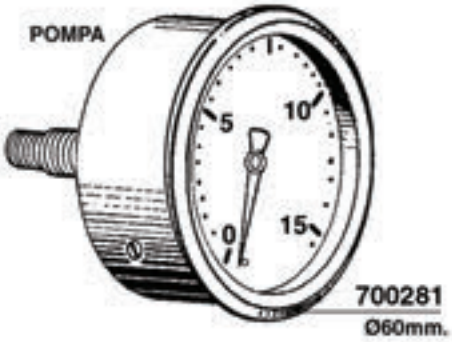
POMPA
700281
Ø60mm.

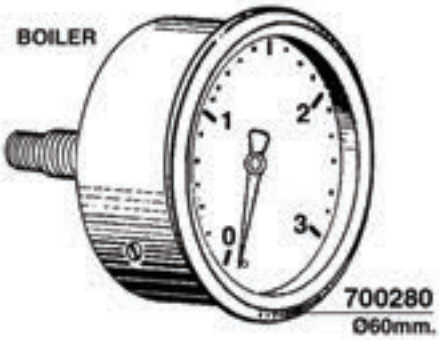
BOILER
700280
Ø60mm.

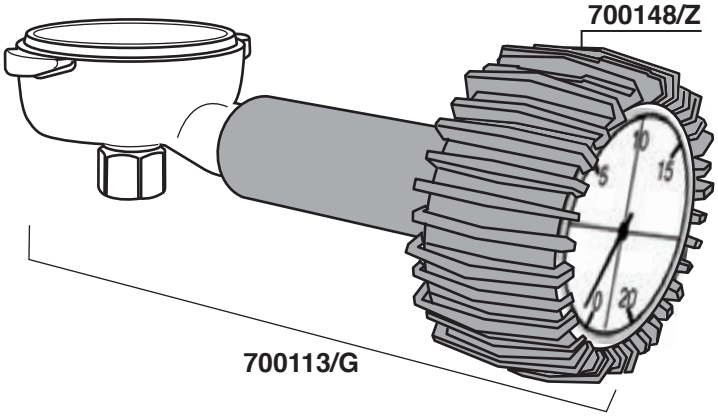
700148/Z
700113/G

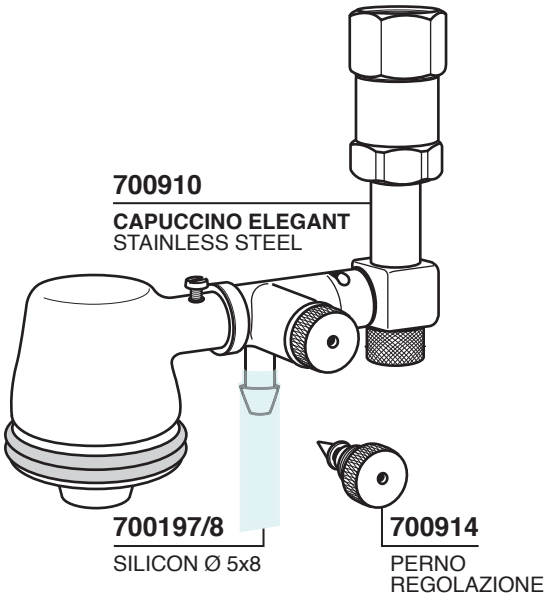
700910
CAPUCCINO ELEGANT
STAINLESS STEEL
700197/8
SILICON Ø 5x8
700914
PERNO
REGOLAZIONE

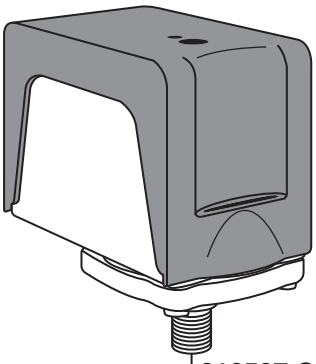
616597 CE/UL

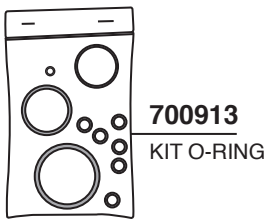
700913
KIT O-RING

GAGGIA

Tav. 06

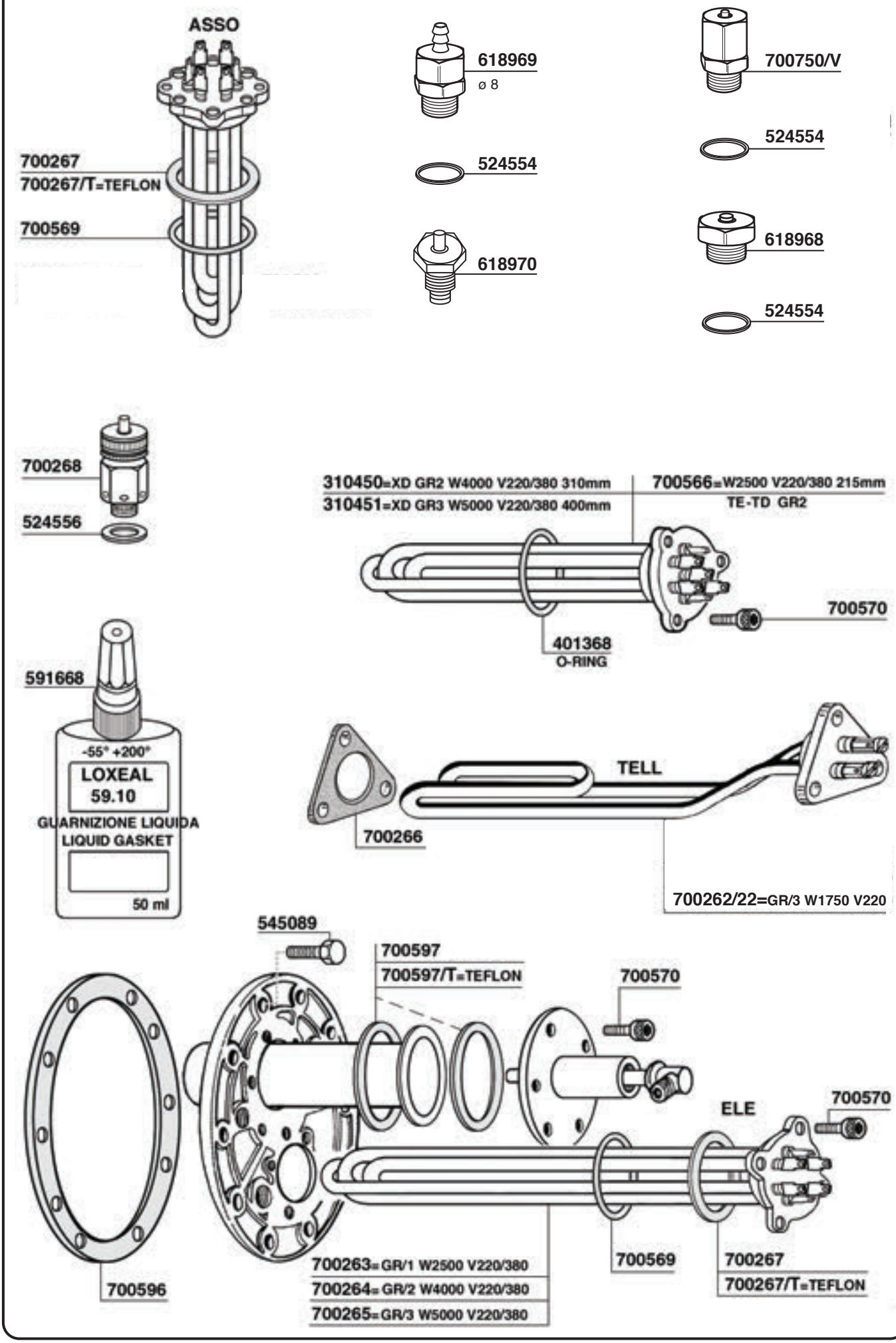

GAGGIA

Tav. 07

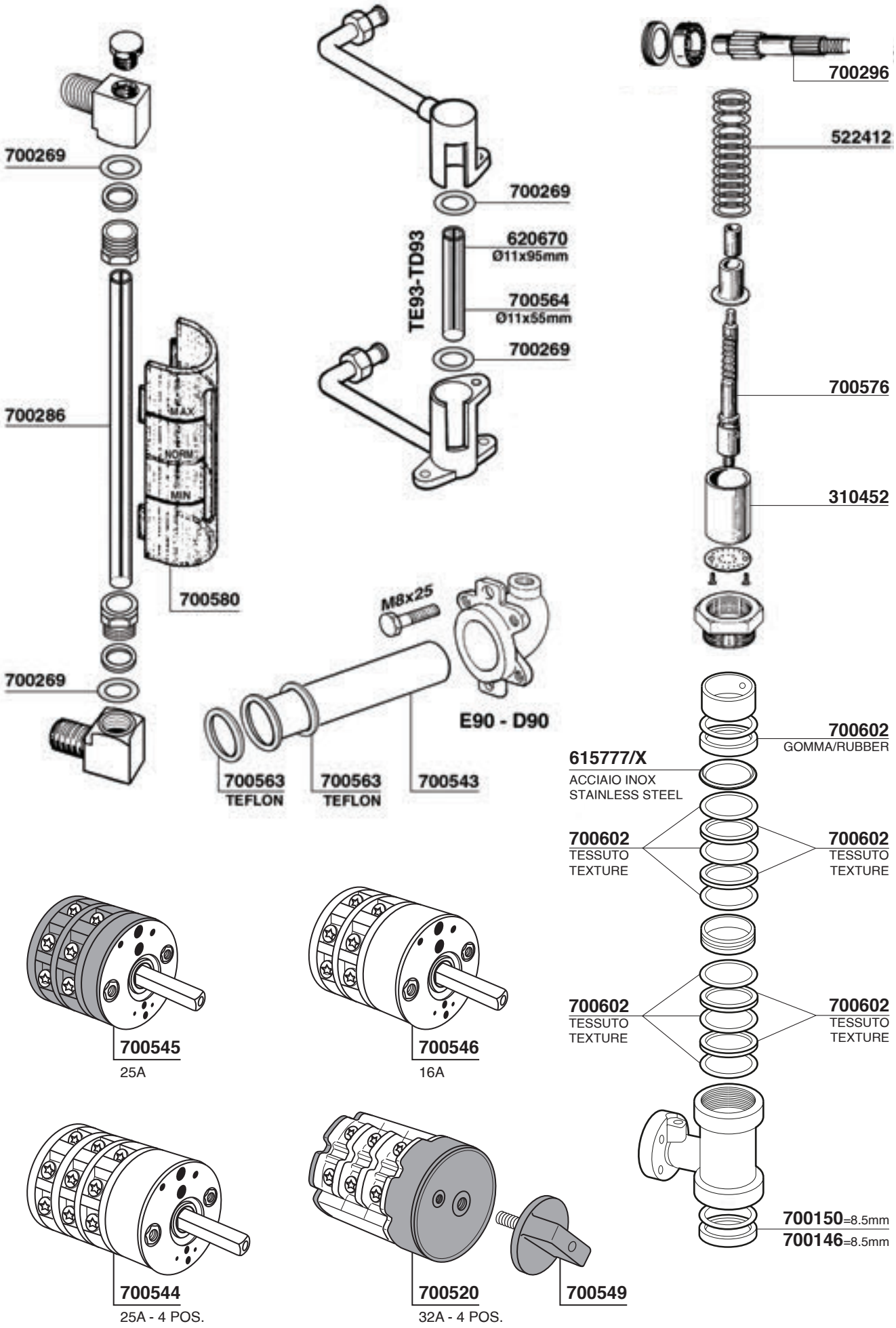

BABY

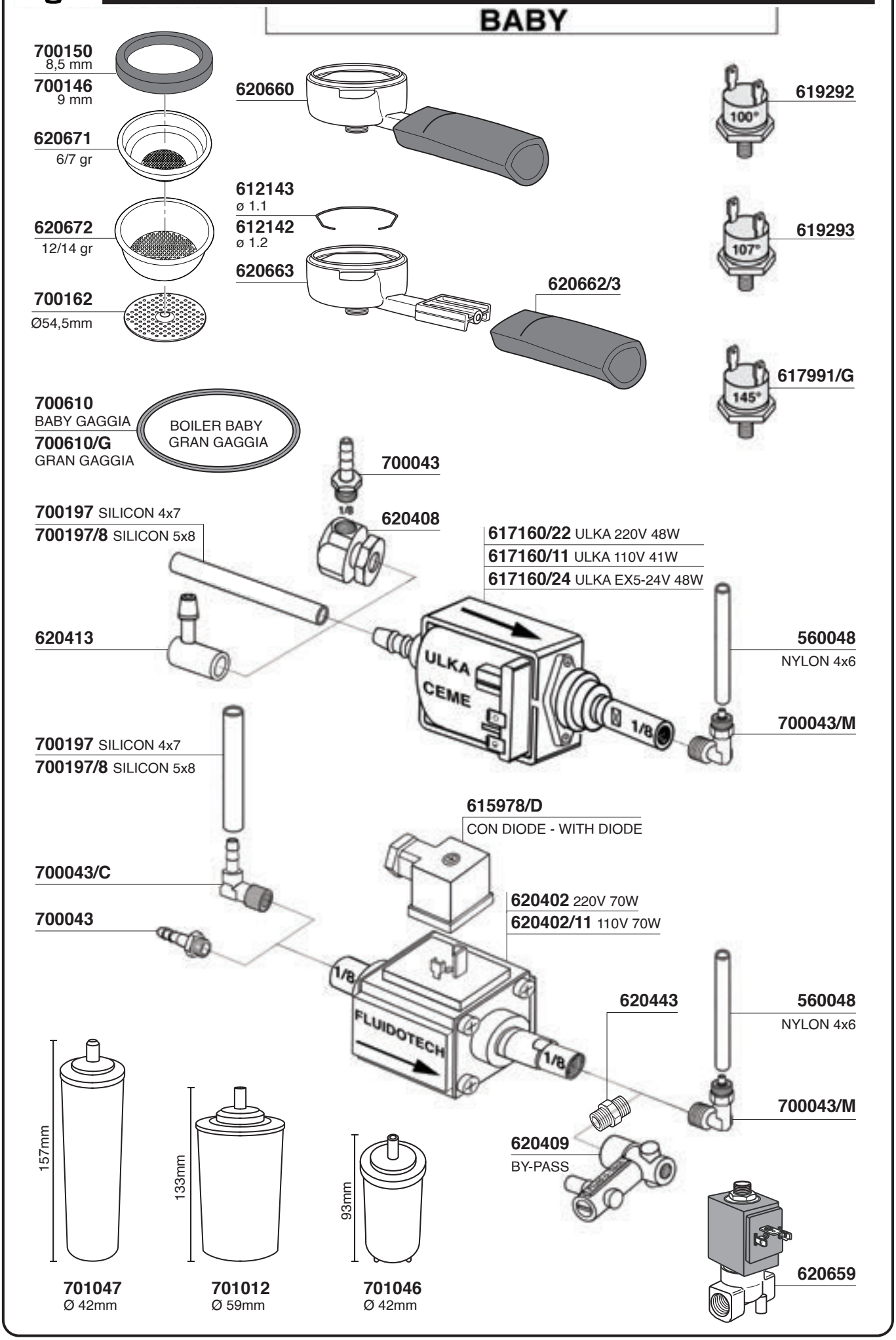
700150
8,5 mm
700146
9 mm
620671
6/7 gr
620672
12/14 gr
700162
Ø54,5mm
620660
612143
ø 1.1
612142
ø 1.2
620663
620662/3
619292
100°
619293
107°
617991/G
145°
700610
BABY GAGGIA
700610/G
GRAN GAGGIA
BOILER BABY
GRAN GAGGIA
700043
1/8
620408
700197 SILICON 4x7
700197/8 SILICON 5x8
620413
617160/22 ULKA 220V 48W
617160/11 ULKA 110V 41W
617160/24 ULKA EX5-24V 48W
ULKA
CEME
1/8
560048
NYLON 4x6
700043/M
700197 SILICON 4x7
700197/8 SILICON 5x8
615978/D
CON DIODE - WITH DIODE
700043/C
700043
620402 220V 70W
620402/11 110V 70W
1/8
FLUIDOTECH
1/8
620443
560048
NYLON 4x6
700043/M
620409
BY-PASS
157mm
133mm
93mm
701047
Ø 42mm
701012
Ø 59mm
701046
Ø 42mm
620659

ISOMAC

Tav.01

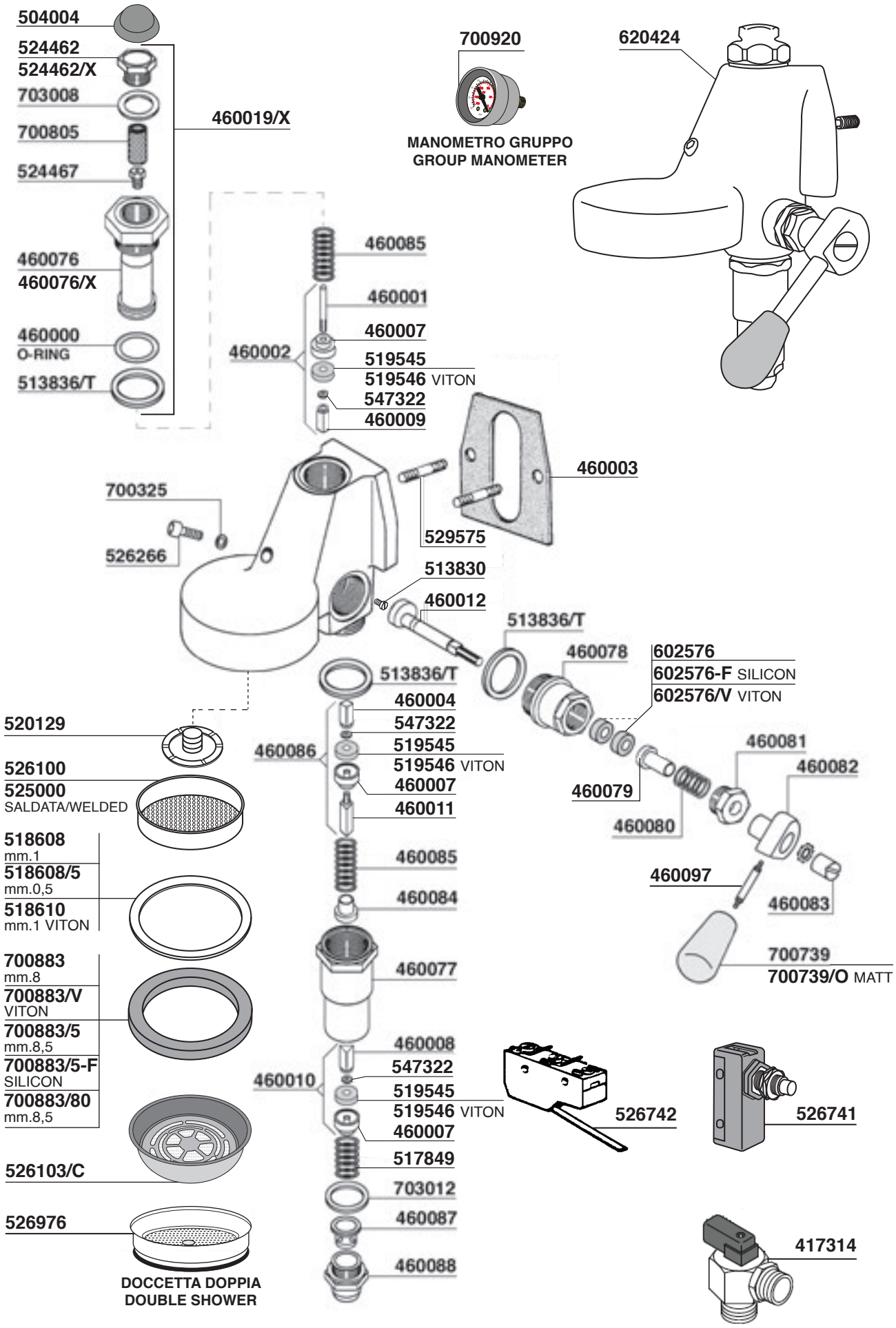

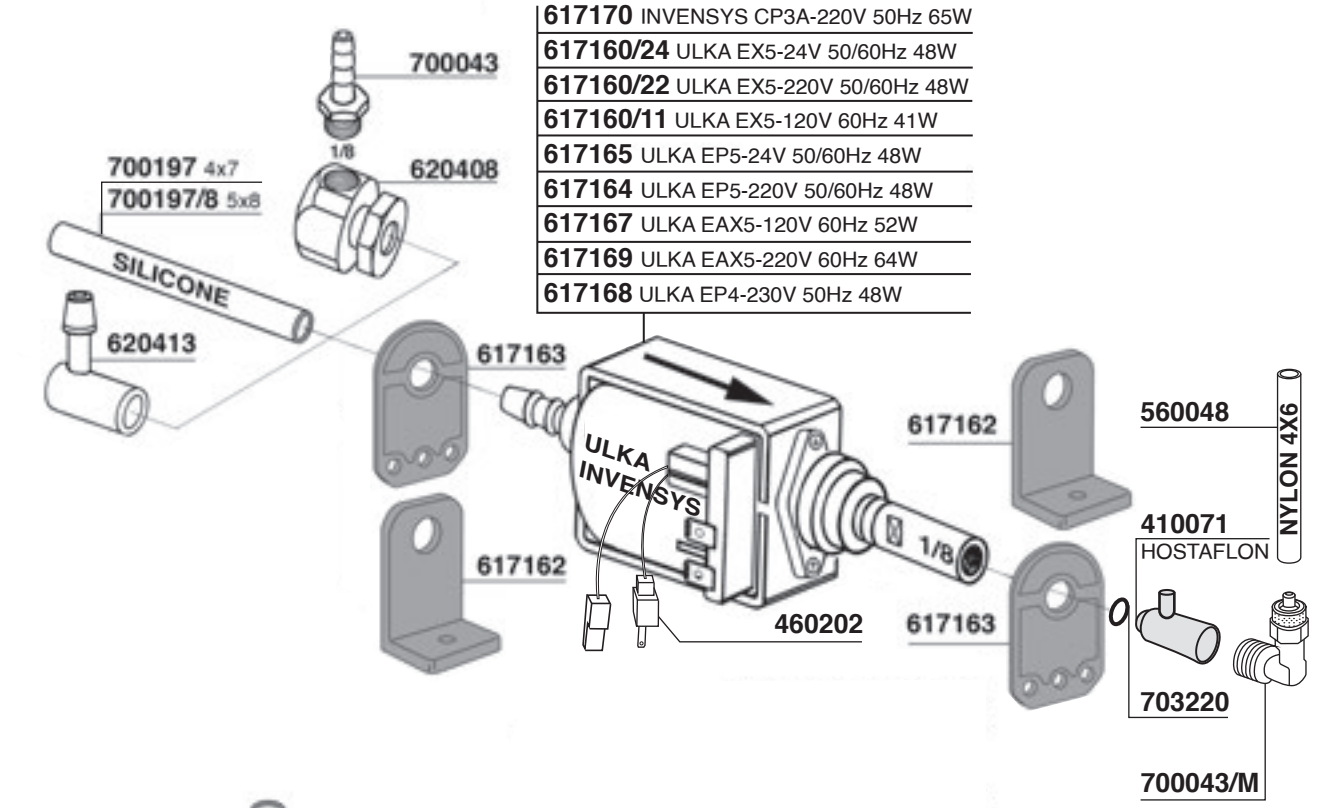
617170 INVENSYS CP3A-220V 50Hz 65W
617160/24 ULKA EX5-24V 50/60Hz 48W
617160/22 ULKA EX5-220V 50/60Hz 48W
617160/11 ULKA EX5-120V 60Hz 41W
617165 ULKA EP5-24V 50/60Hz 48W
617164 ULKA EP5-220V 50/60Hz 48W
617167 ULKA EAX5-120V 60Hz 52W
617169 ULKA EAX5-220V 60Hz 64W
617168 ULKA EP4-230V 50Hz 48W
700043
1/8
620408
700197 4x7
700197/8 5x8
SILICONE
620413
617163
617162
ULKA
INVENSYS
1/8
460202
617162
617163
560048
NYLON 4X6
410071
HOSTAFLON
703220
700043/M

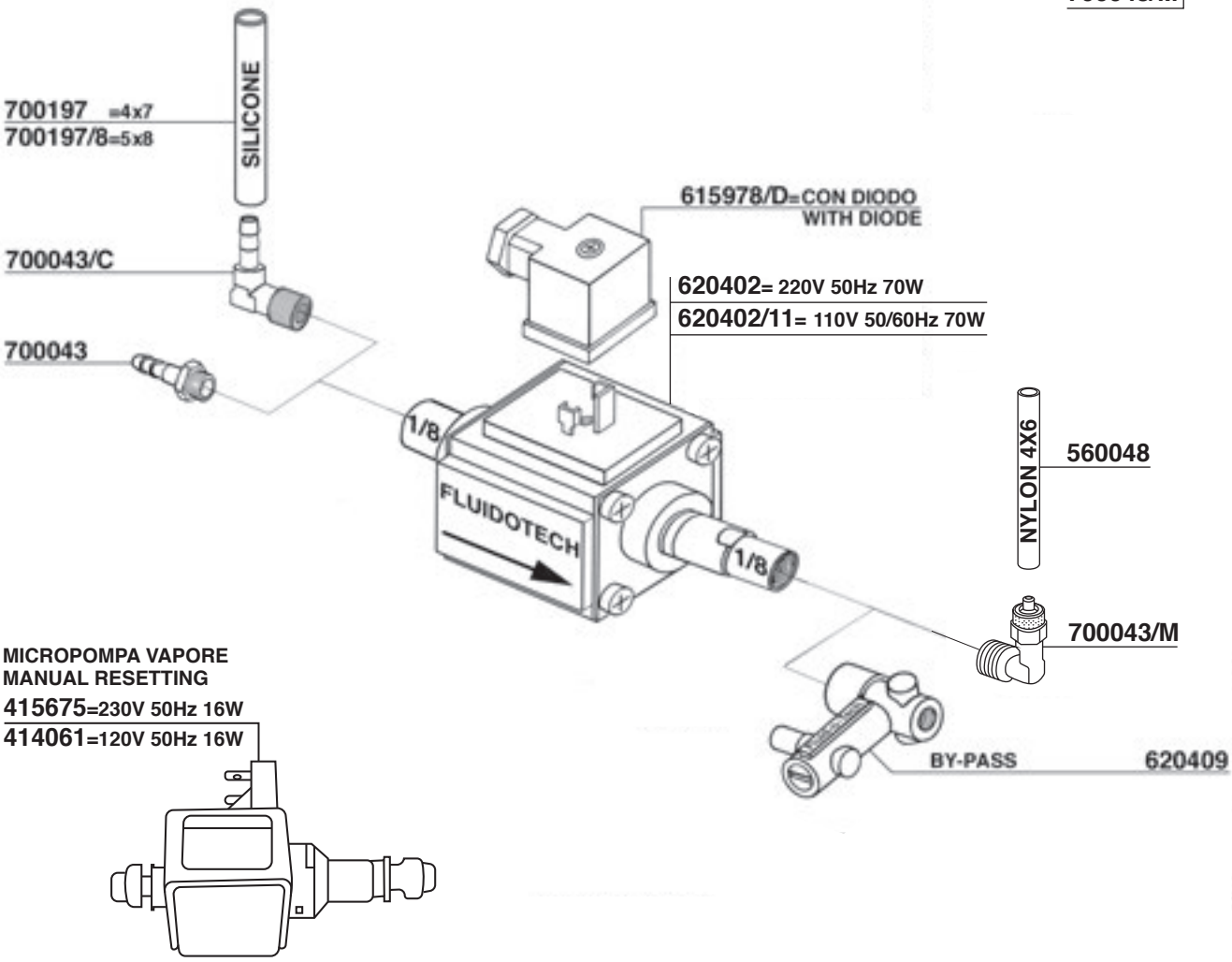
700197 =4x7
700197/8=5x8
SILICONE
700043/C
700043
615978/D=CON DIODO
WITH DIODE
620402= 220V 50Hz 70W
620402/11= 110V 50/60Hz 70W
1/8
FLUIDOTECH
1/8
NYLON 4X6
560048
700043/M
BY-PASS
620409
MICROPOMPA VAPORE
MANUAL RESETTING
415675=230V 50Hz 16W
414061=120V 50Hz 16W

LA SAN MARCO

Tav. 01

700419
700450
700451
700396
700396/T=TEFLON
700418
700418/T
TEFLON
Ø 50
630404 1/2F
MOD.85-95
700418
700418/T
TEFLON
524769
700402
700400
700400/V
551934
700418
700418/T
TEFLON
700475
700176 =LUCIFER
700177 =PARKER
630406 3/4"
630415 1/2"
700401
700486
700485
547101
700439
700181/22 =V220
700181/11 =V110
700179/22 =V220
700179/11 =V110
PARKER LUCIFER
700730

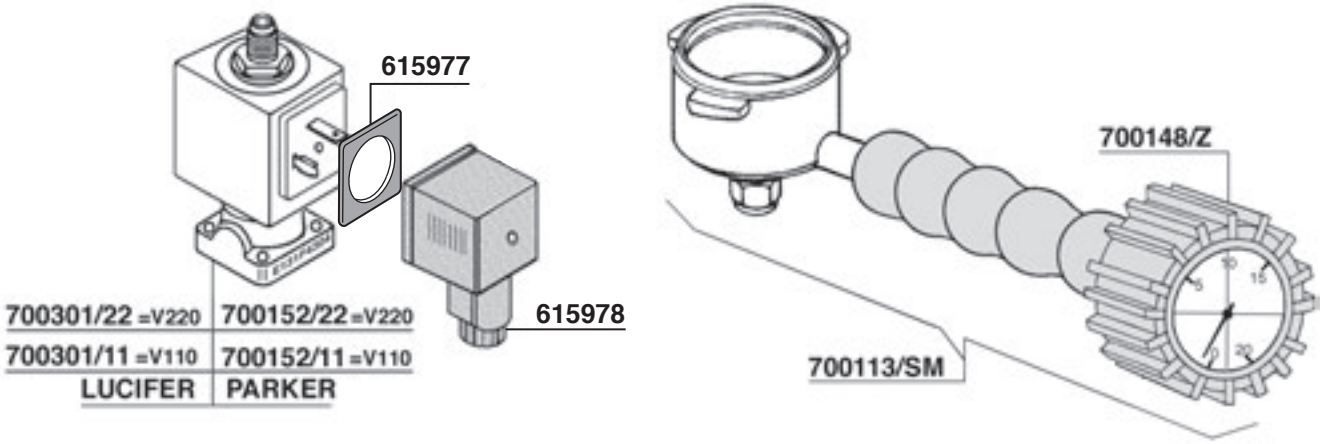

LA SAN MARCO

Tav. 02

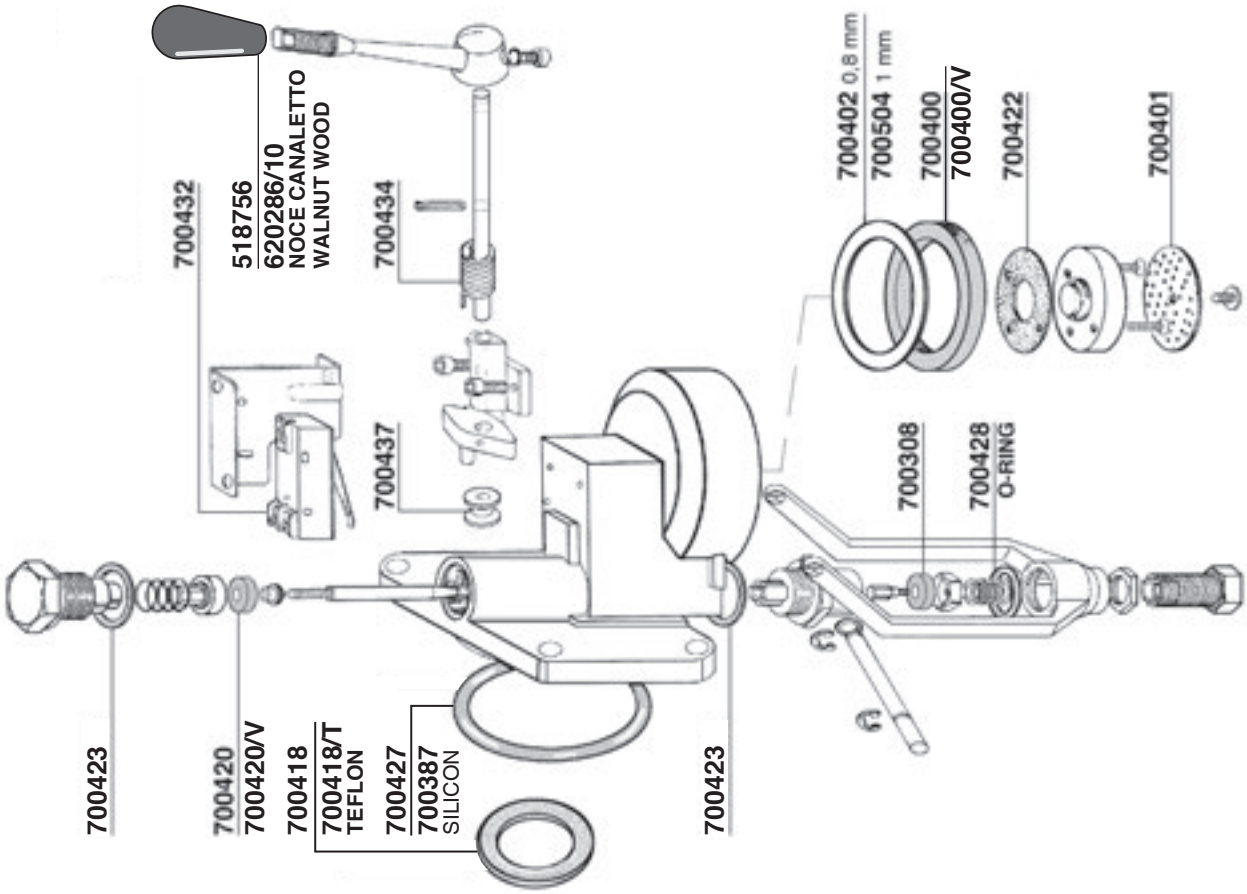

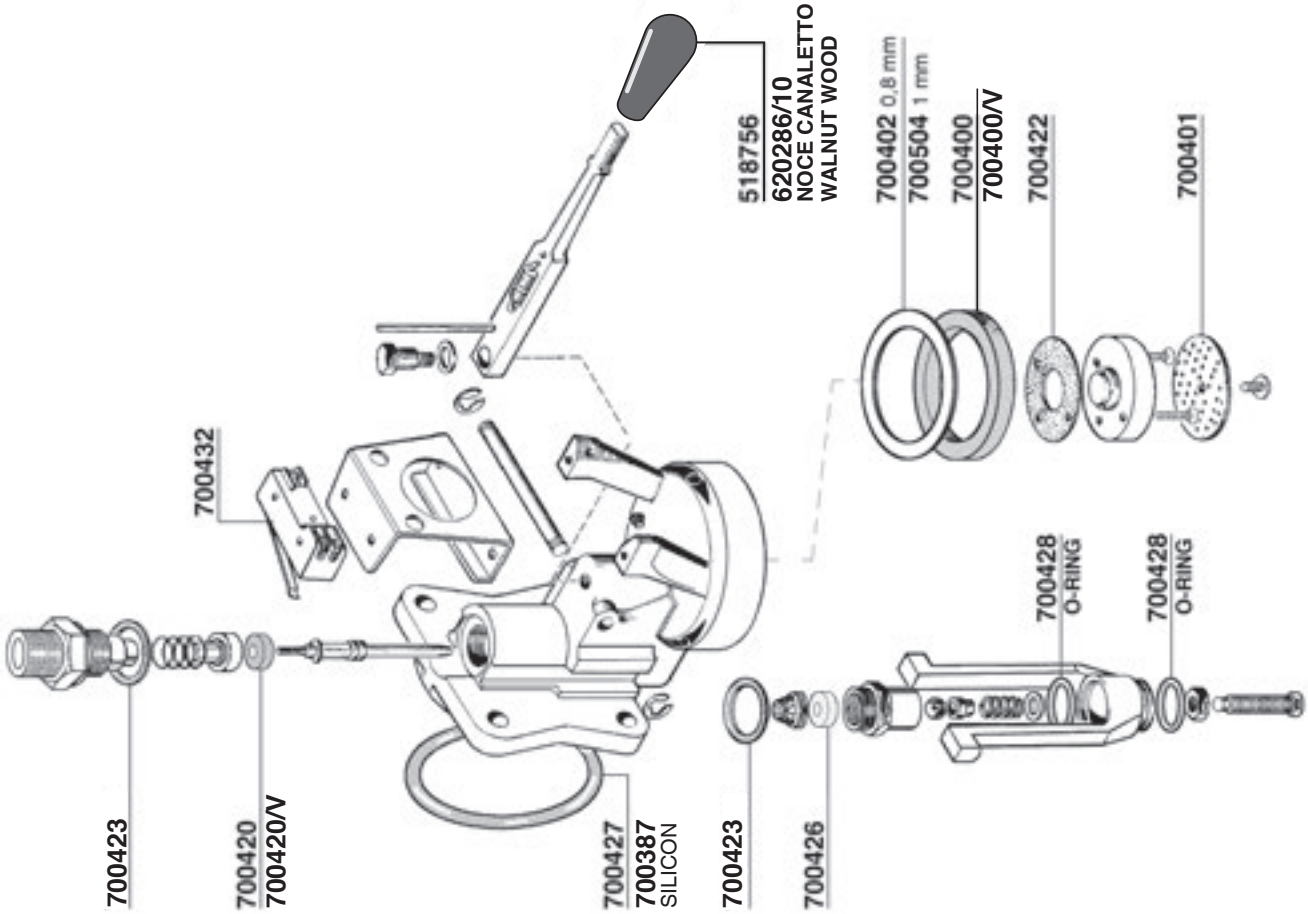

LA SAN MARCO

Tav. 03

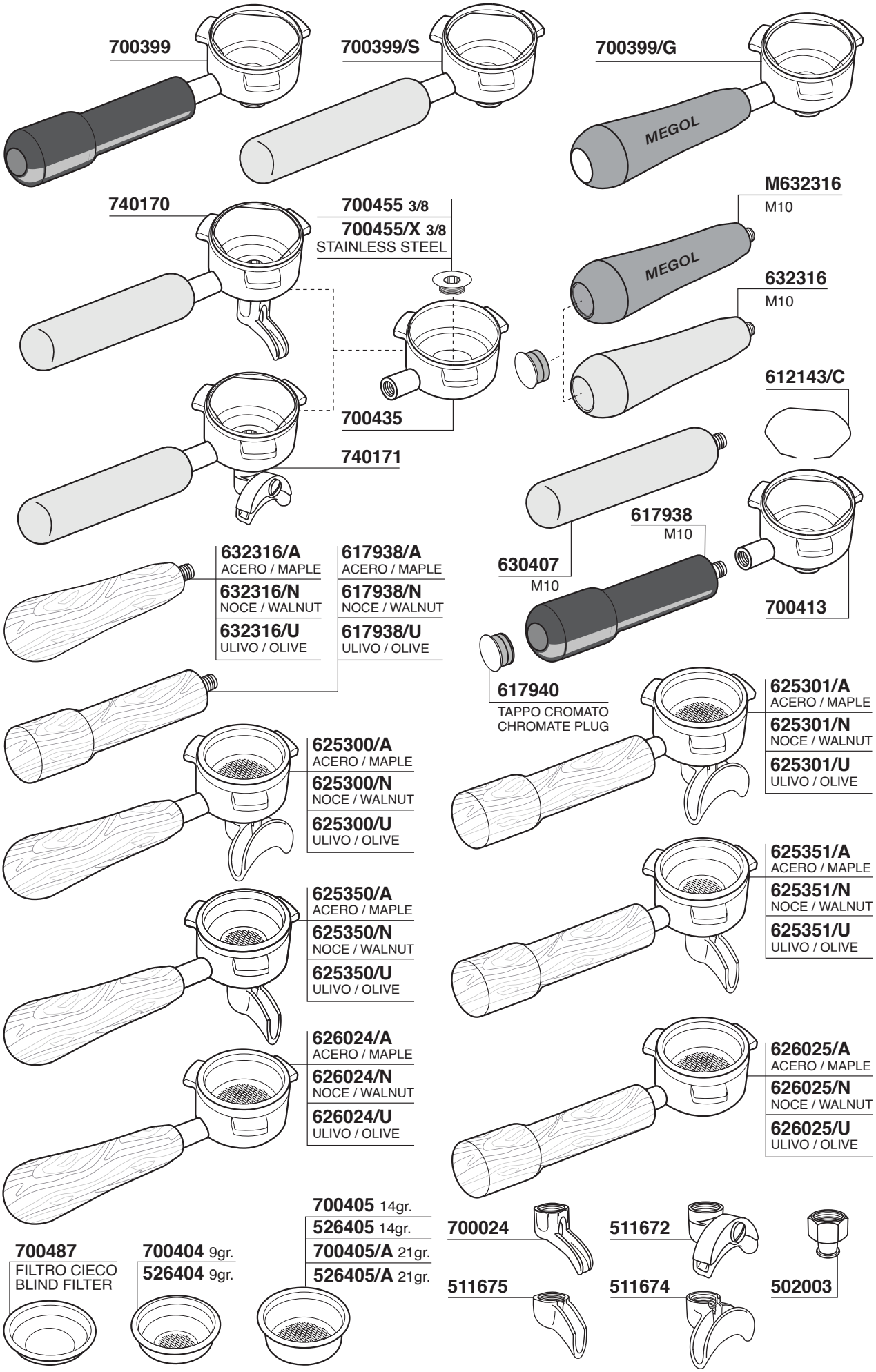

LA SAN MARCO

Tav. 04

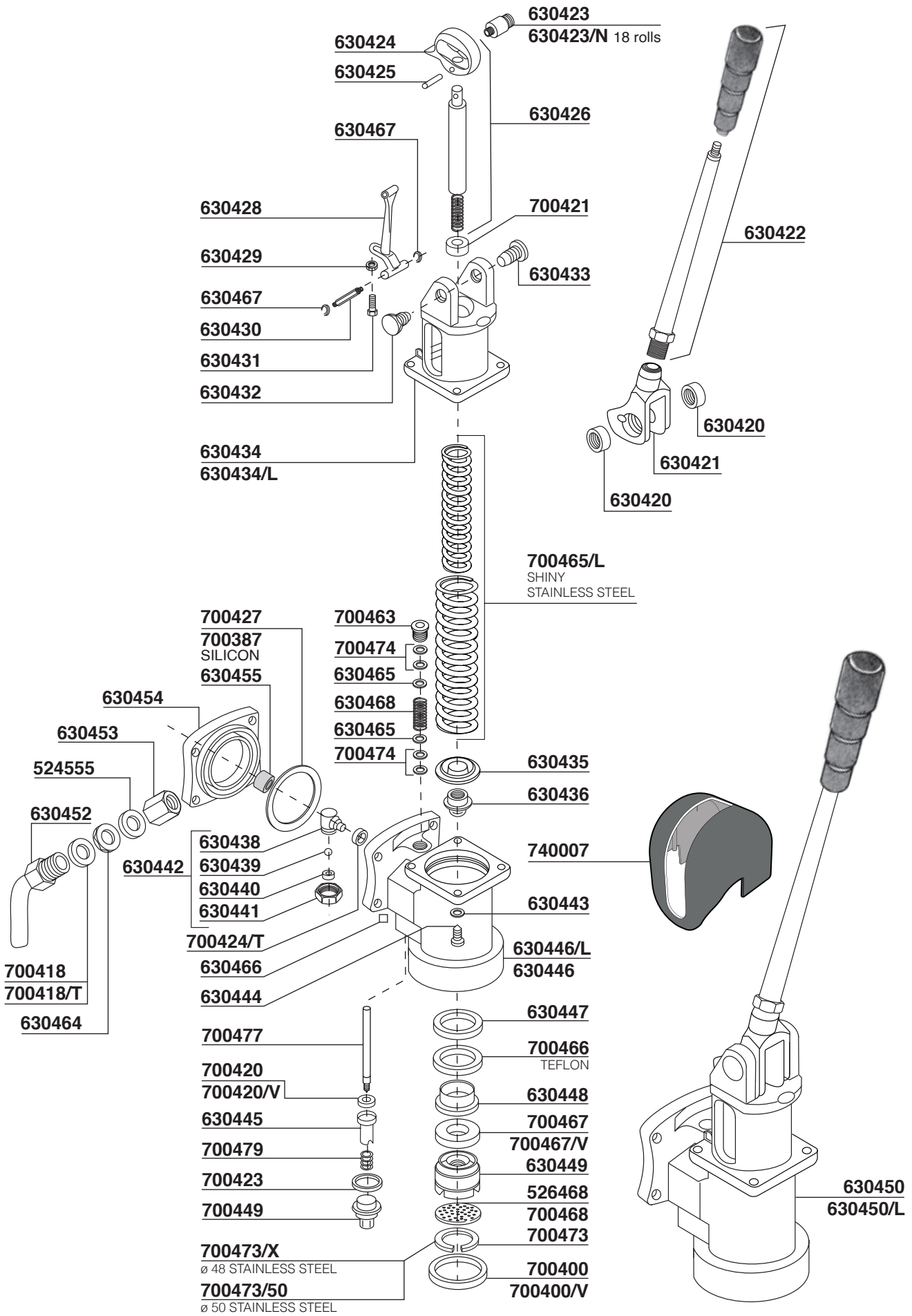

LA SAN MARCO

Tav. 05

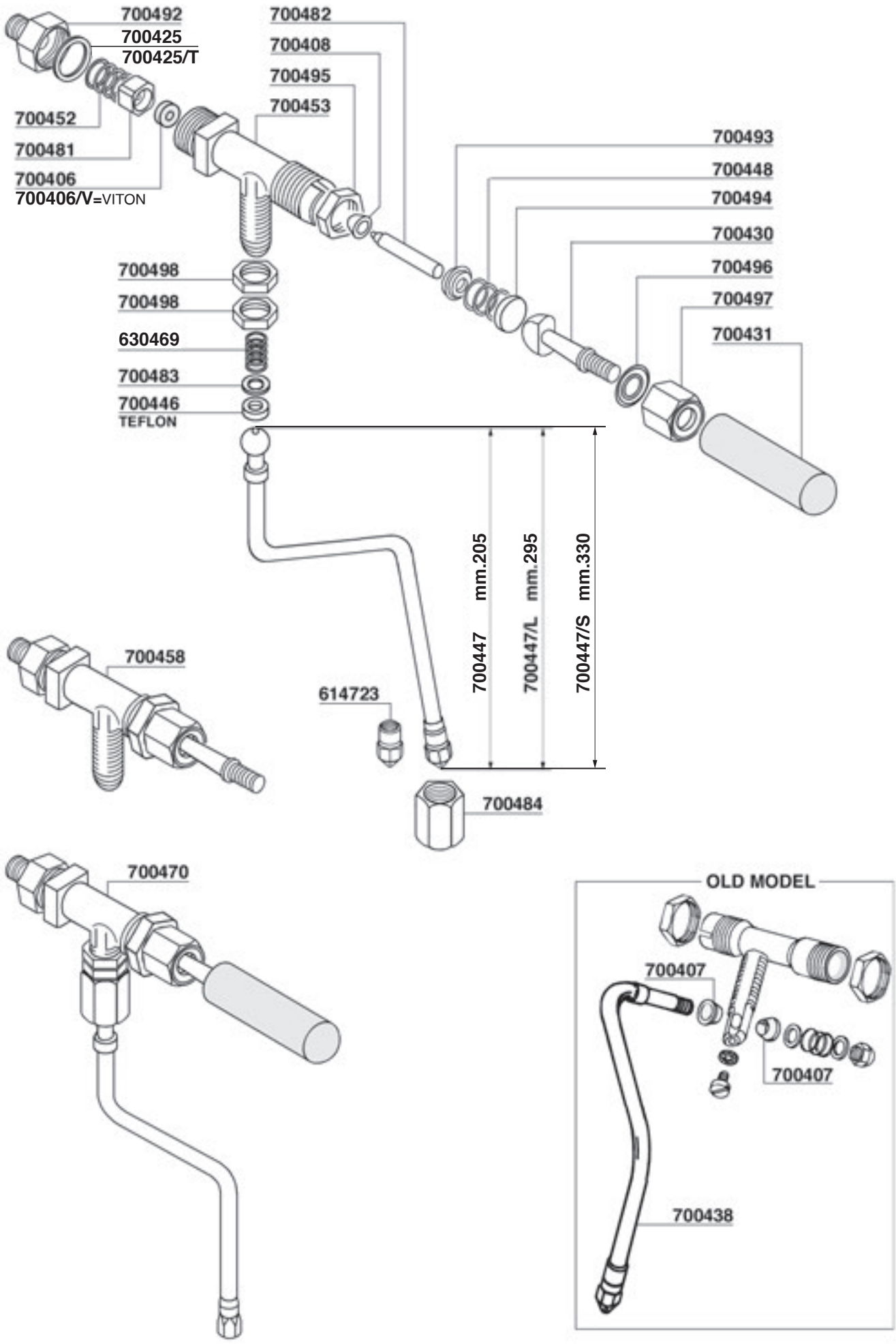

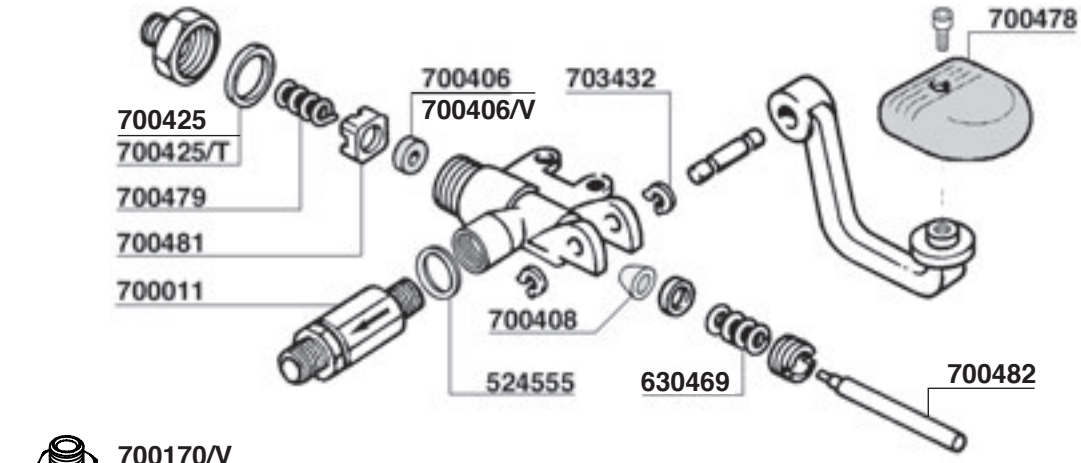
700478
700406
700406/V
703432
700425
700425/T
700479
700481
700011
700408
524555
630469
700482

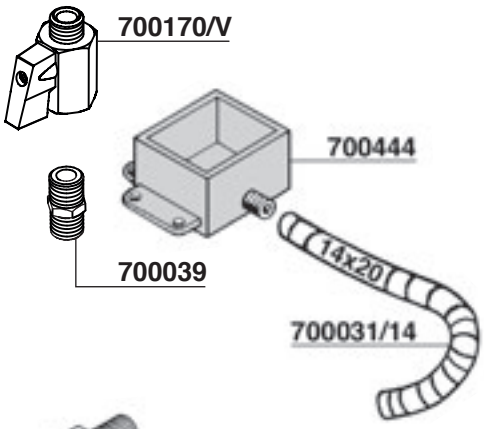
700170/V
700444
700039
14x20
700031/14

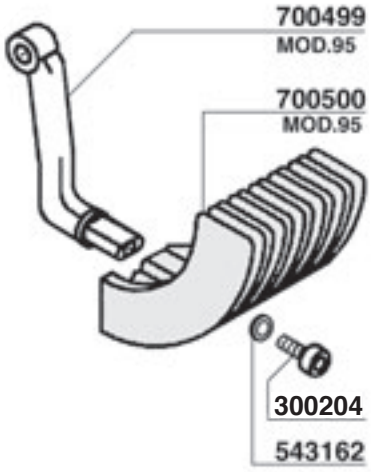
700499
MOD.95
700500
MOD.95
300204
543162

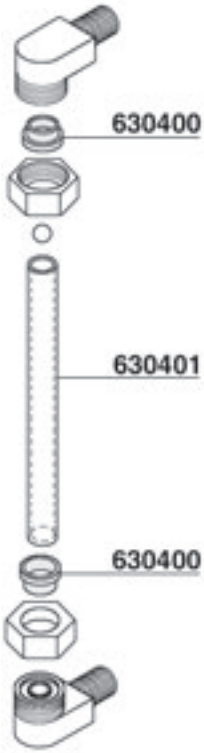
630400
630401
630400

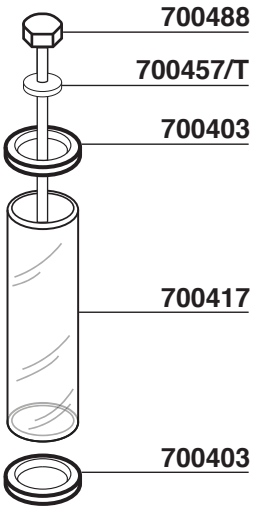
700488
700457/T
700403
700417
700403

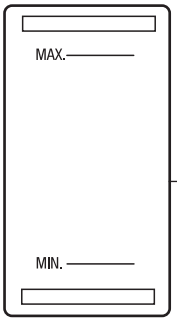
MAX.
MIN.
700461

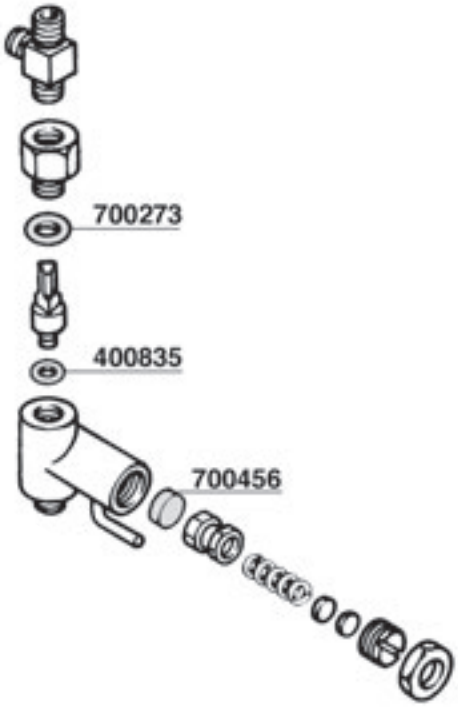
700273
400835
700456

LA SAN MARCO

Tav. 07

206

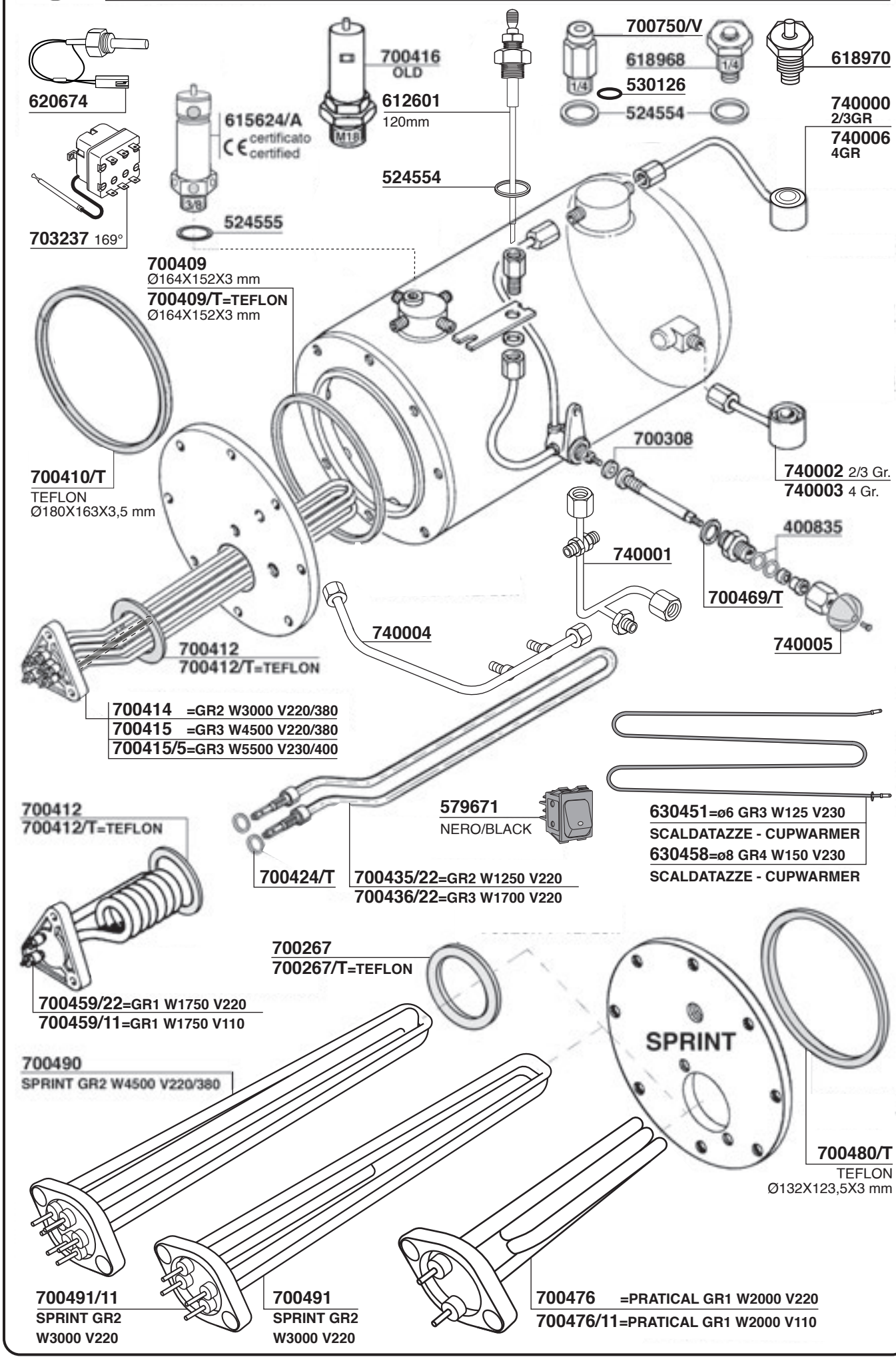

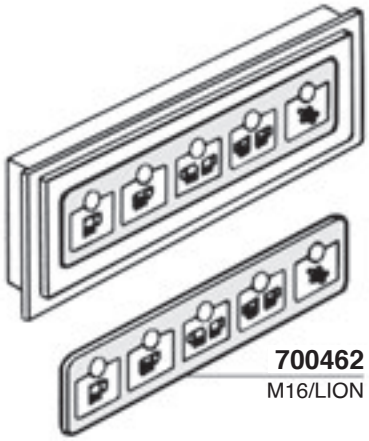

700462
M16/LION

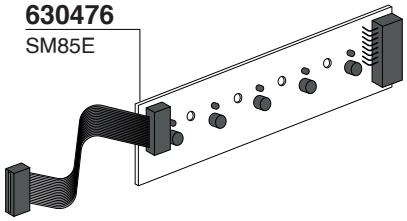

630476
SM85E

630416
SM85E

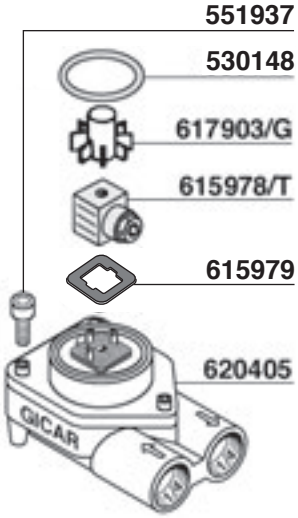

551937
530148
617903/G
615978/T
615979
620405

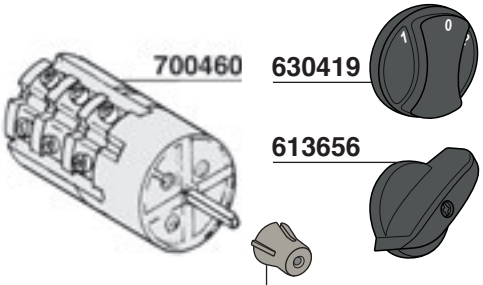

700460
630419
613656
630473
630462
SERIE 85-95 LEVA

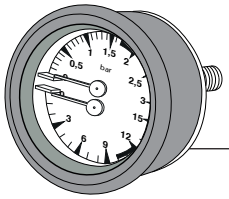

700411
Ø 60mm

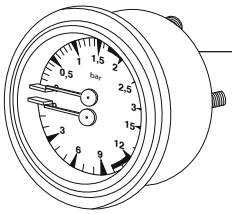

740166
Ø 63mm

COIL
BOBINA
700179/22=V220
700179/11=V110
615977
615978

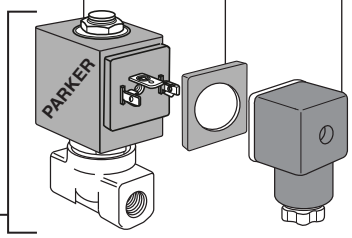

632017/22=V220
632017/11=V110

630474
GICAR CODE
(9.1.00.91G)

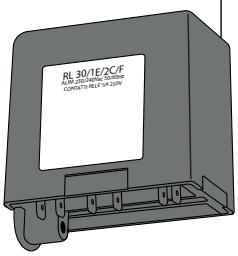

700574=V220
700574/11=V110

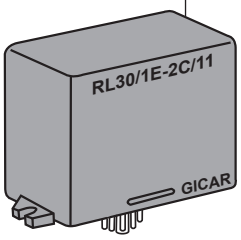

630475
GICAR CODE
(9.5.22.27G00)

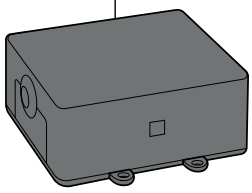

620726
GICAR CODE
(9.5.30.04G00)

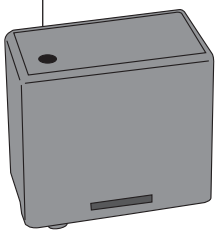

401920

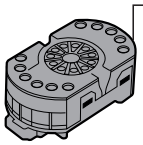

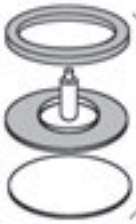

700124
Ø55mm

616597
CE/UL

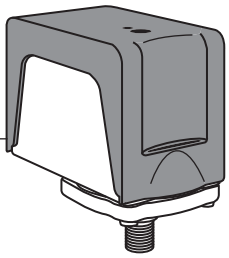

616592

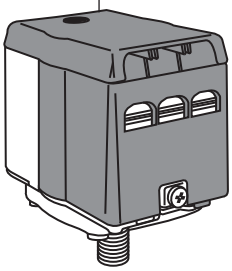

LA SAN MARCO

630411
SUPPORTO DISPLAY+THE'
TEA DISPLAY COVER

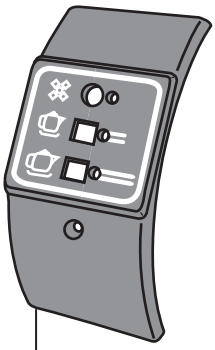

630414
SUPPORTO DOSATURA
DOSING DISPLAY

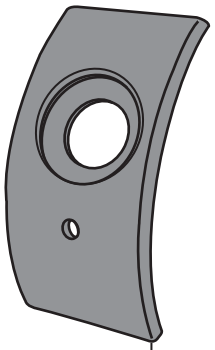

630412
MASCHERA RUBINETTO
VAPORE-ACQUA
WATER-STEAM TAP COVER

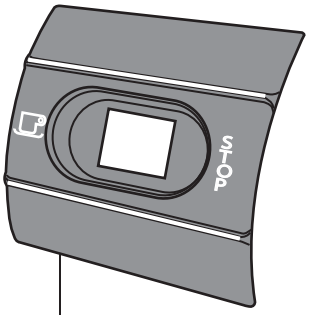

630410
SUPPORTO INTERRUTTORE ON-OFF
ON-OFF SWITCH SUPPORT

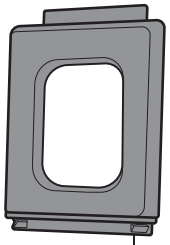

630461

630472

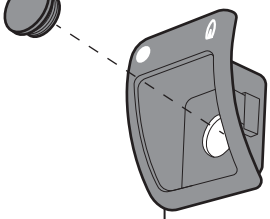

630460
GAS

630471

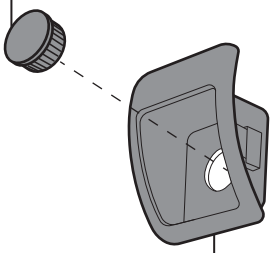

630470

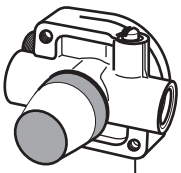

700464
700464/S

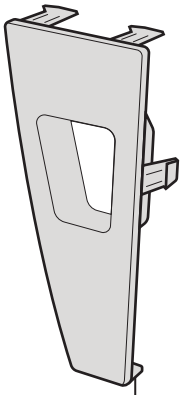

630417
CHROMED

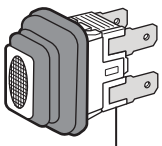

630418
BLUE

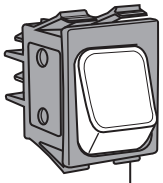

621080

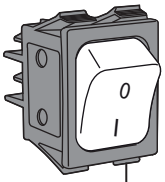

700429

LA SPAZIALE

Tav. 01

S5 ALL VERSION - S2 ALL VERSION - S8 ALL VERSION - S9 ALL VERSION
S40 SELETRON - S40 SUPREMA

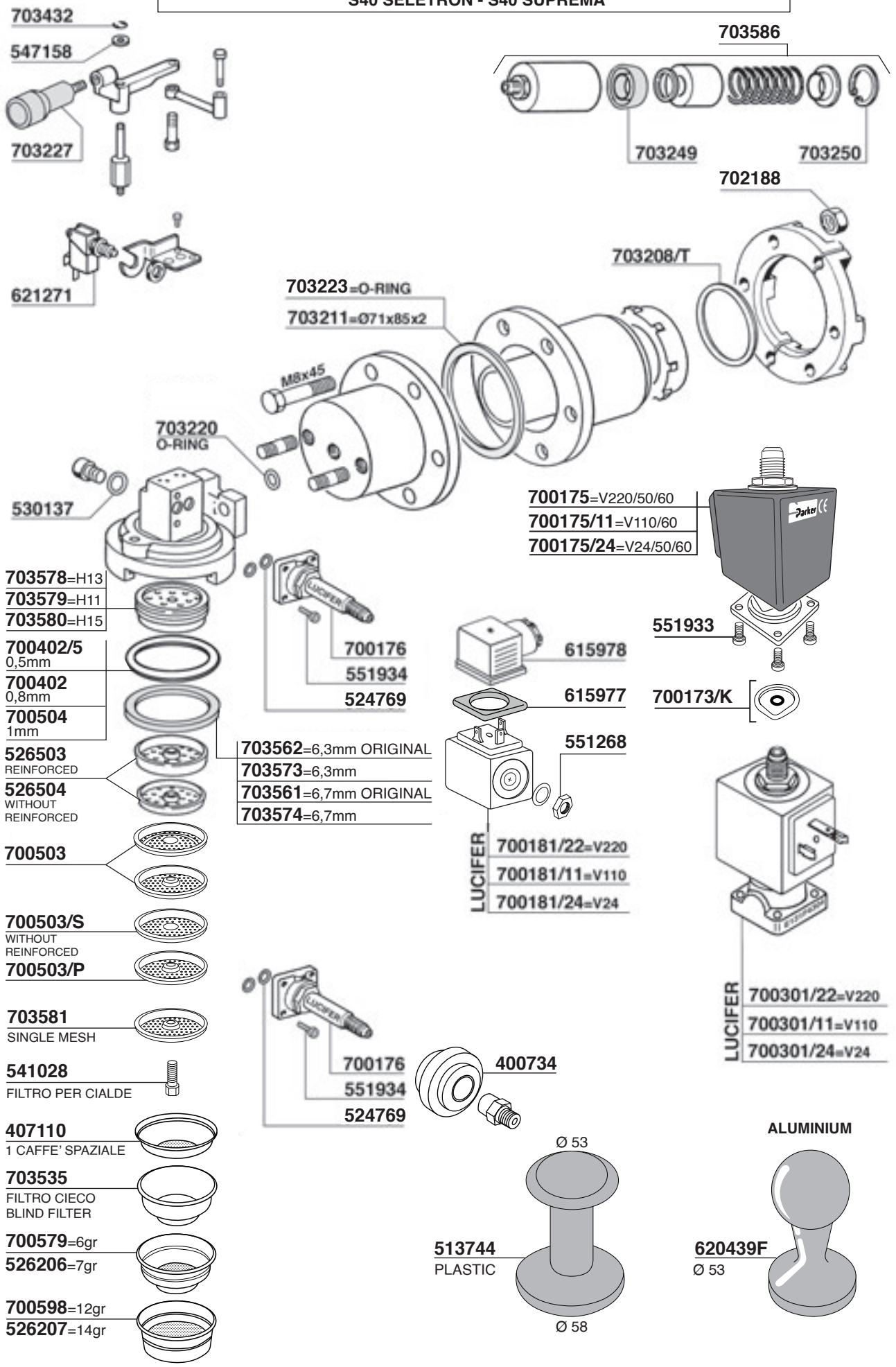

LA SPAZIALE

Tav. 02

NEW3000 - NEW EC

210

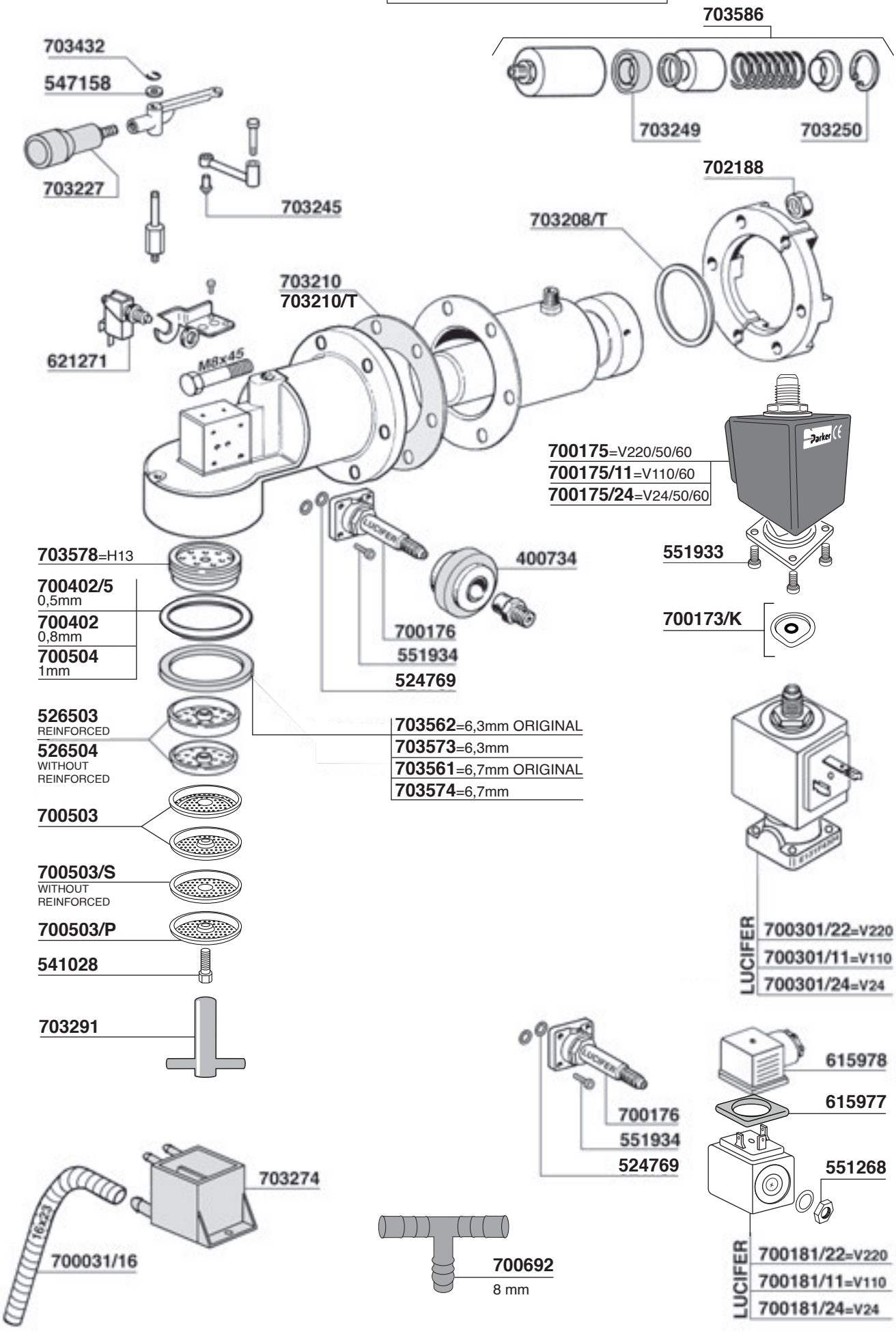

LA SPAZIALE

Tav. 03

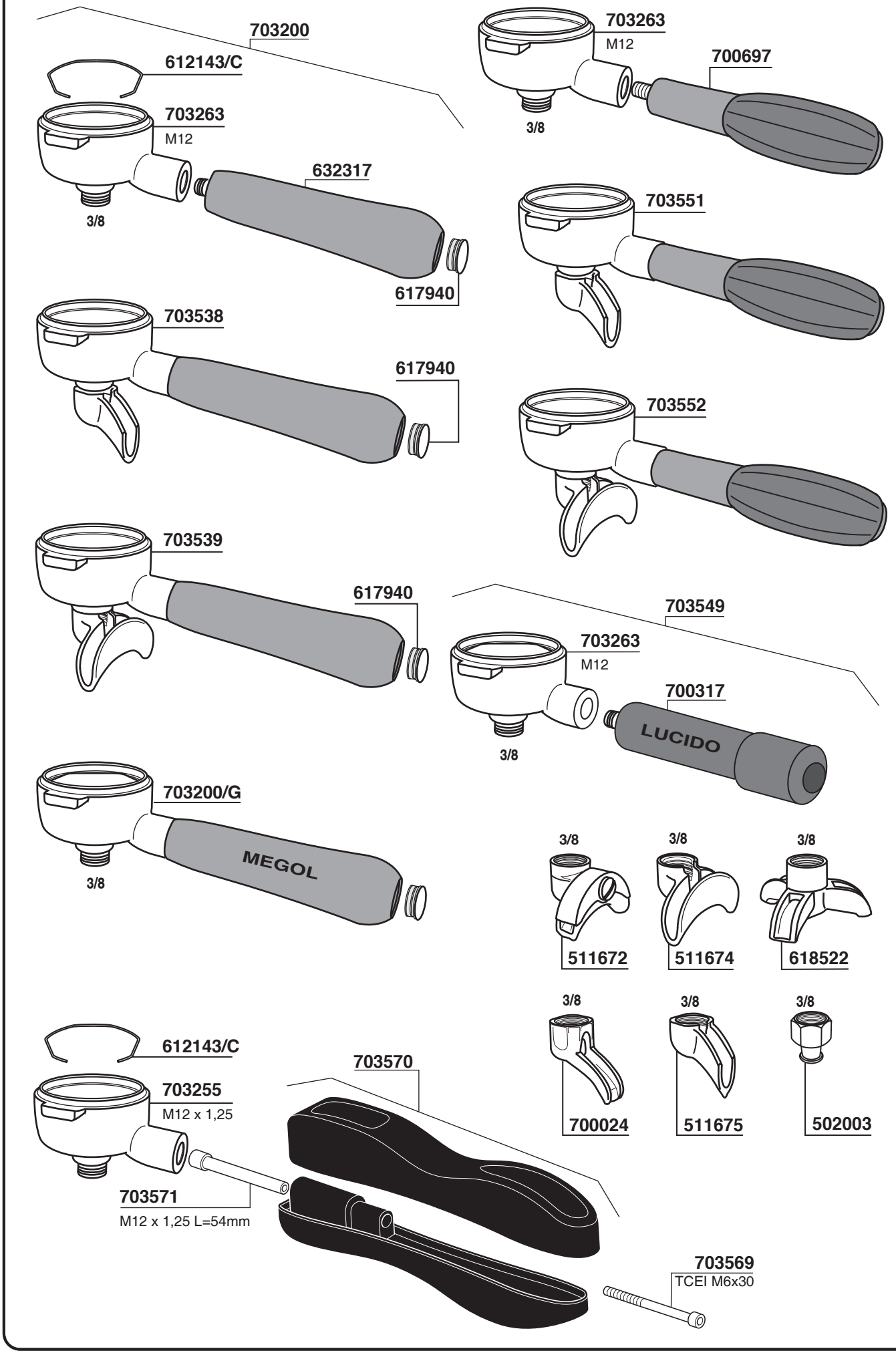

LA SPAZIALE

Tav. 04

S1 DREAM - S8 - S2

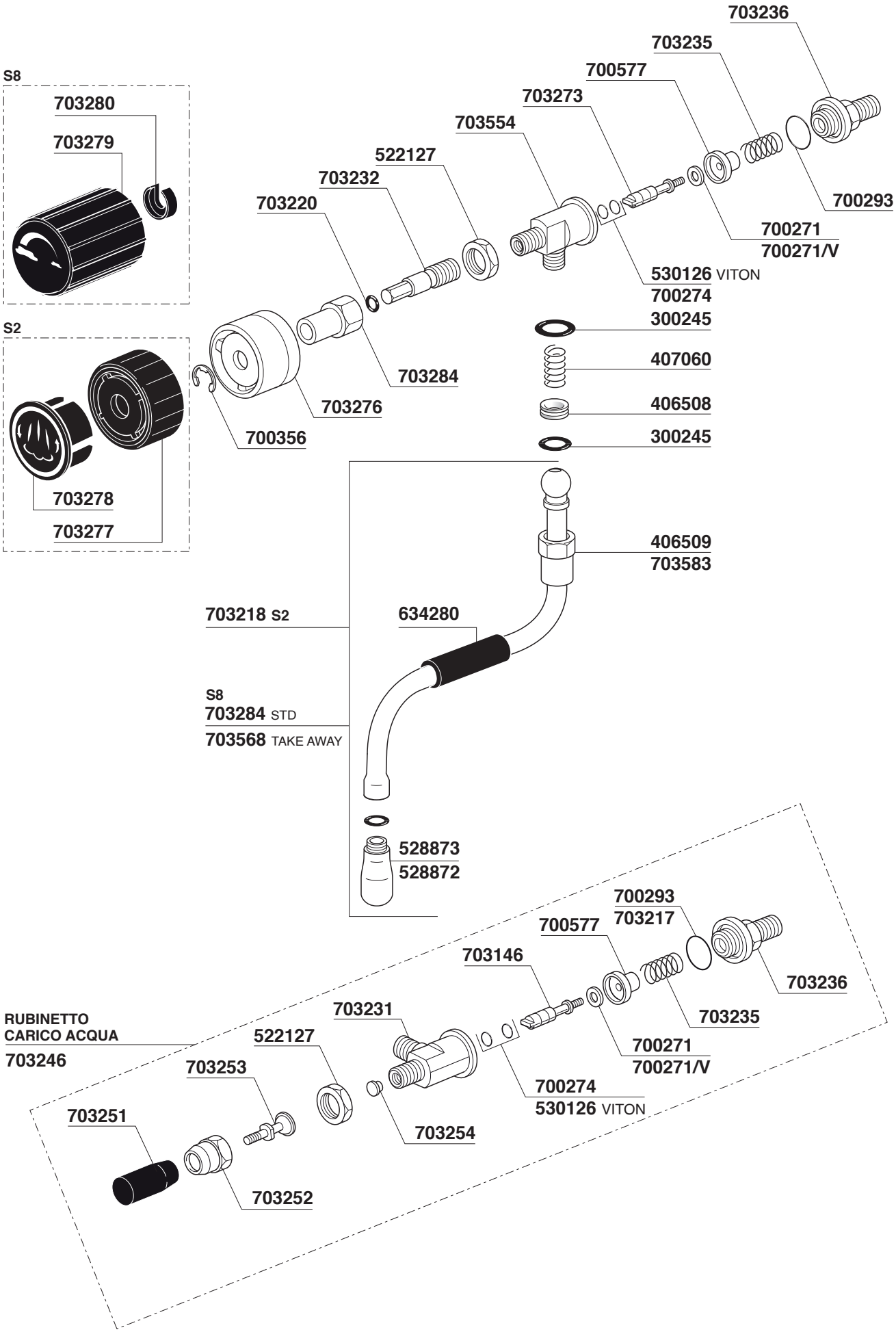

LA SPAZIALE

Tav. 05

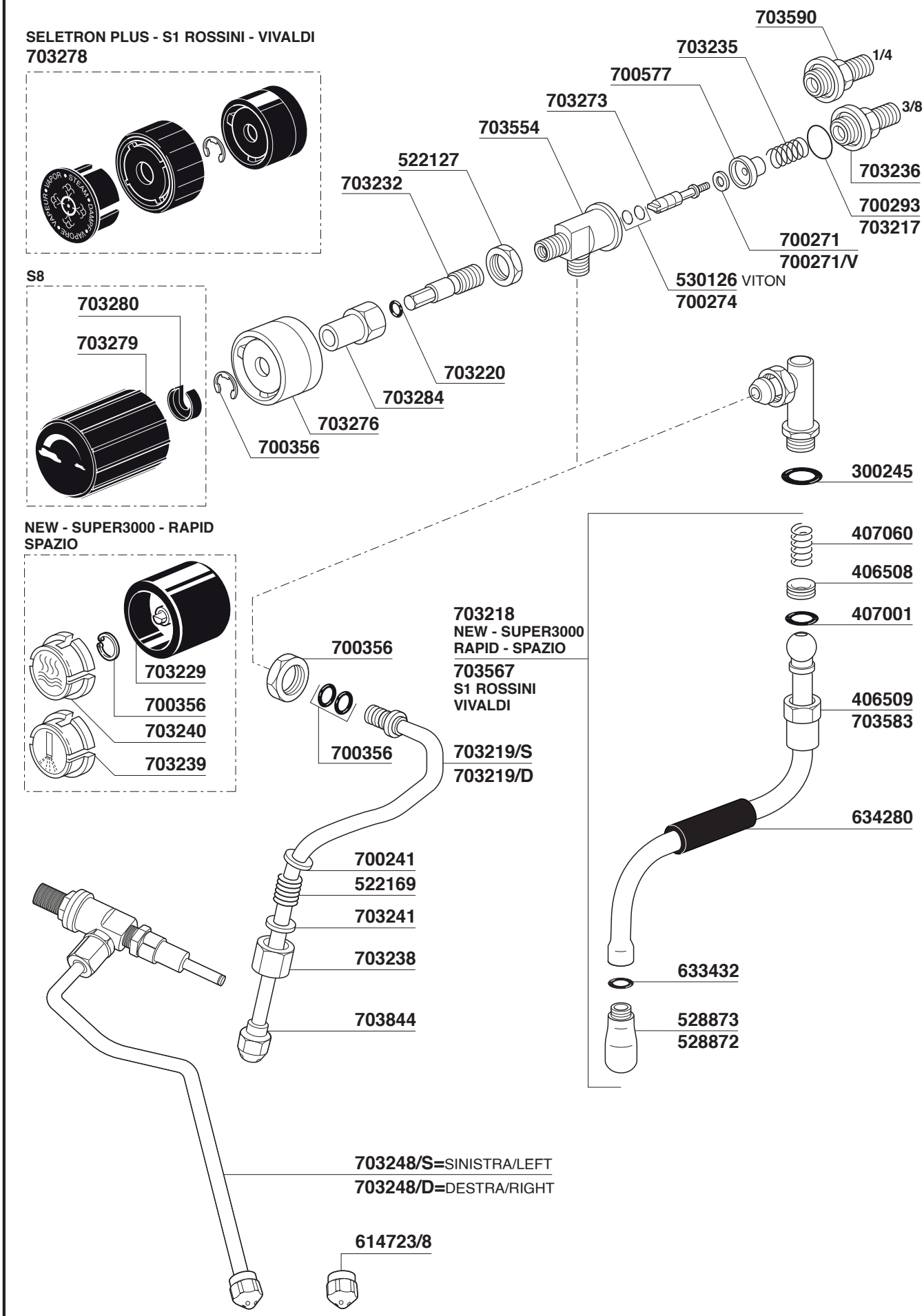

LA SPAZIALE

Tav. 06

S1 MINI - VIVALDI

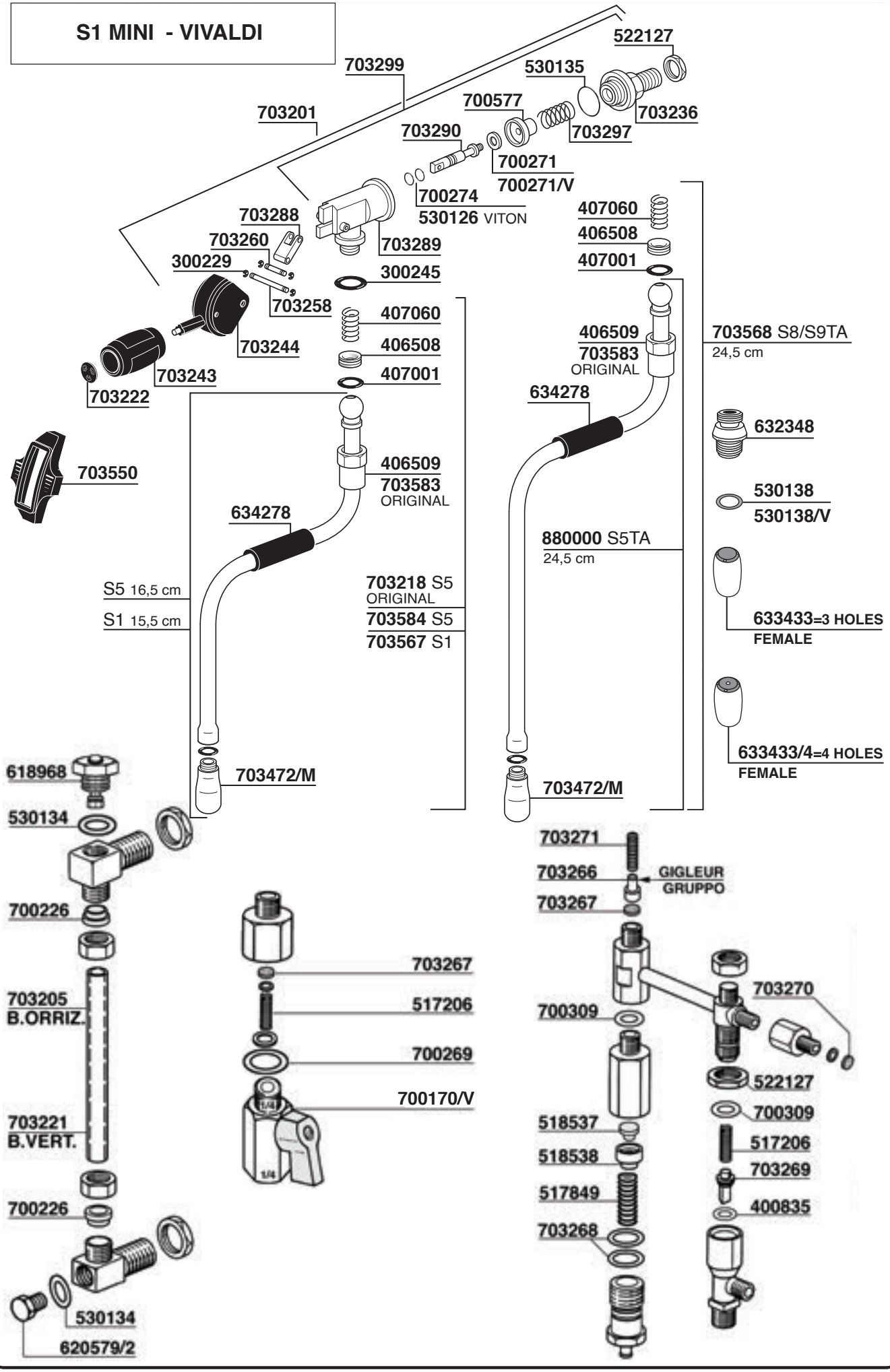

LA SPAZIALE

Tav. 07

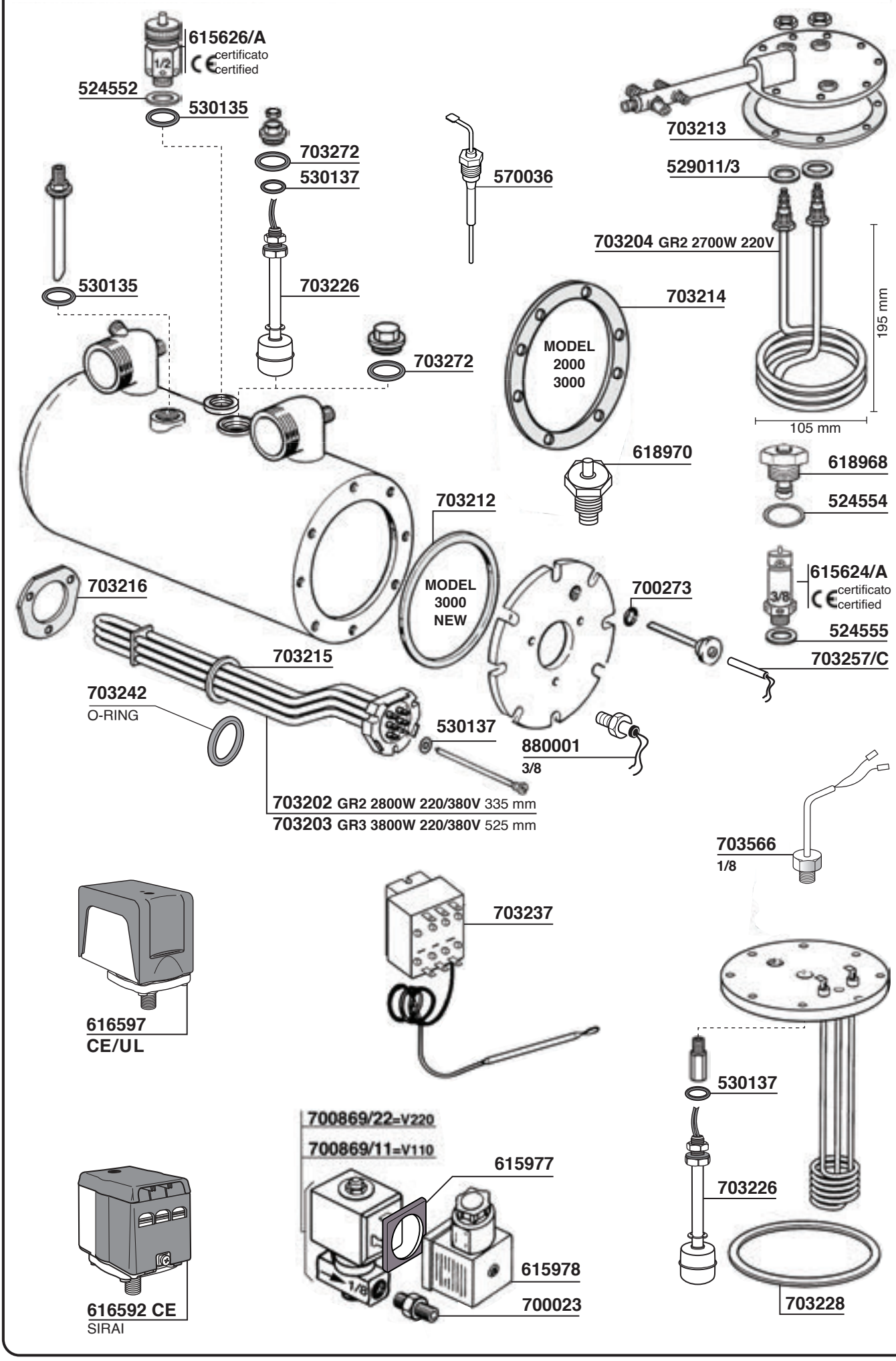

LA SPAZIALE

630381
NEW E.P.

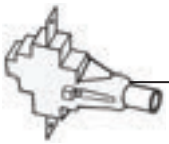

634027
3000 ELEKTRIC

703275
S3 E.P.

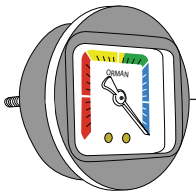

703265

703264

703582
ORIGINAL

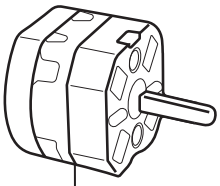

703247
20A 0-1

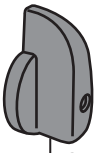

613656

700411

700315

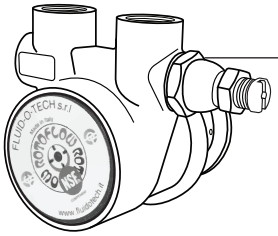

620406 150 Lt/h
620406/X 150 Lt/h
INOX-STAINLESS STEEL
620406/2 200 Lt/h
620406/1 100 Lt/h

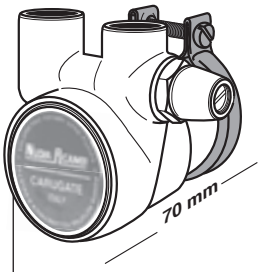

700047 50 Lt/h
MINIPOMPA

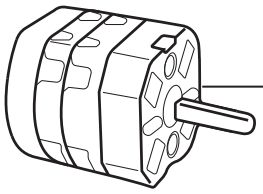

703588
20A 0-1

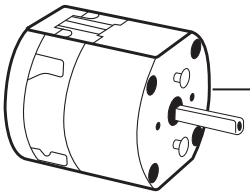

703589
32A 0-1

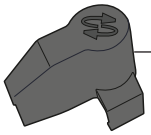

617902

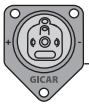

703560

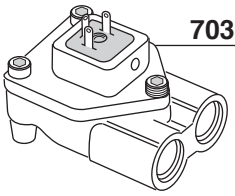

703559

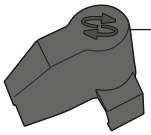

617902

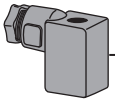

615978/T

615979

620405

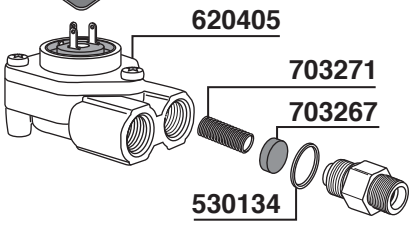

703271
703267
530134

621347=10μF
702311=16μF

700154/22=V220/50 W165 HP0,2
170x165x185 mm
700085/22=V220/50/60 W330 HP0,5 UL USA
225x175x180 mm
700085/11=V110/60 W330 HP0,5 UL USA
225x175x180 mm

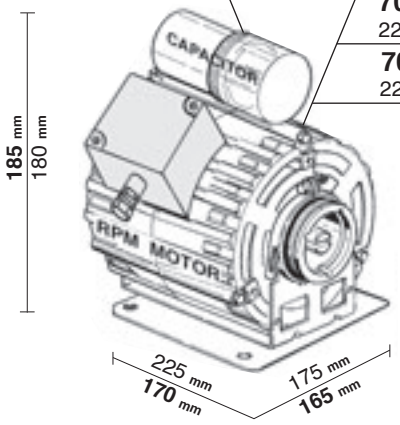

617162

617160/22 ULKA EX5-220V 50/60Hz 48W
617160/11 ULKA EX5-120V 60Hz 41W

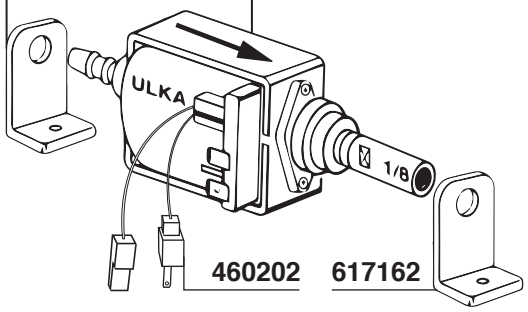

460202
617162

703540
S3

703292
NEW EK

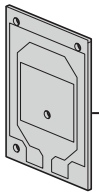

703541
S3

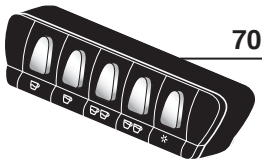

703543
S5

703576
S2 EK

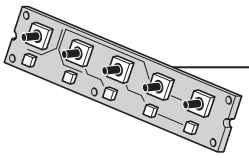

703545
S5

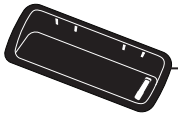

703577
S5

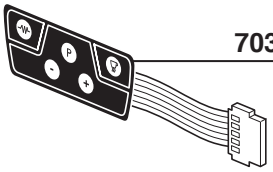

703544
S5

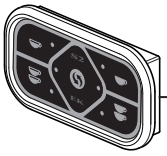

703548
S2 EK

703546
S3 EK 2/3 GR

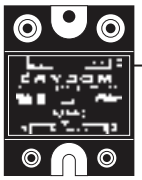

703296

703587
S2 EP

703547
S3 Seletron

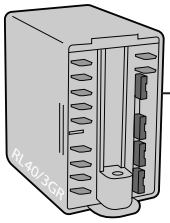

703575
S2-3GR 230V

703556
S8-S9

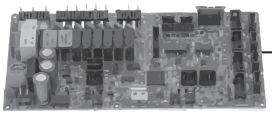

703585
UNIVERSAL

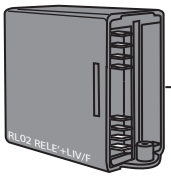

703287
NEW 300

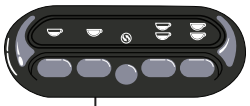

703555
S8 - S9

703563
VIVALDI

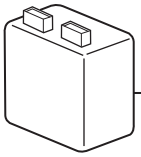

703293
1-2 GR 110V
NEW EK GR

703294
1-2 GR 230V
NEW EK GR

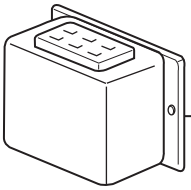

703295
3-4 GR 230V
NEW EK

703542
S5-S8-S9 Compact
S2 Special 2 GR

703557
S5-S8-S9
VERSIONE
COMPAK

NUOVA SIMONELLI

Tav. 01

AURELIA II S. - V - DIGIT

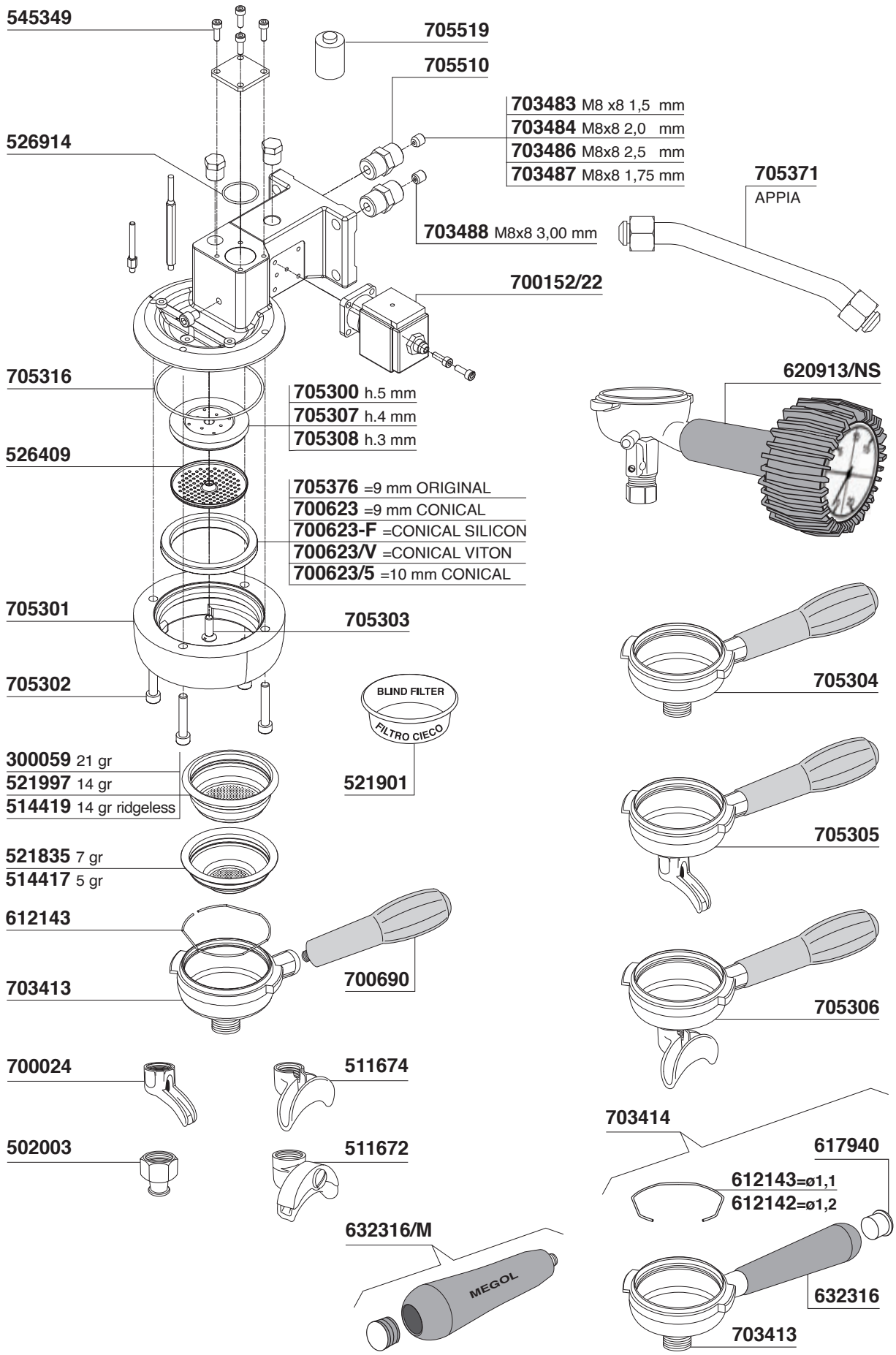

NUOVA SIMONELLI

Tav. 02

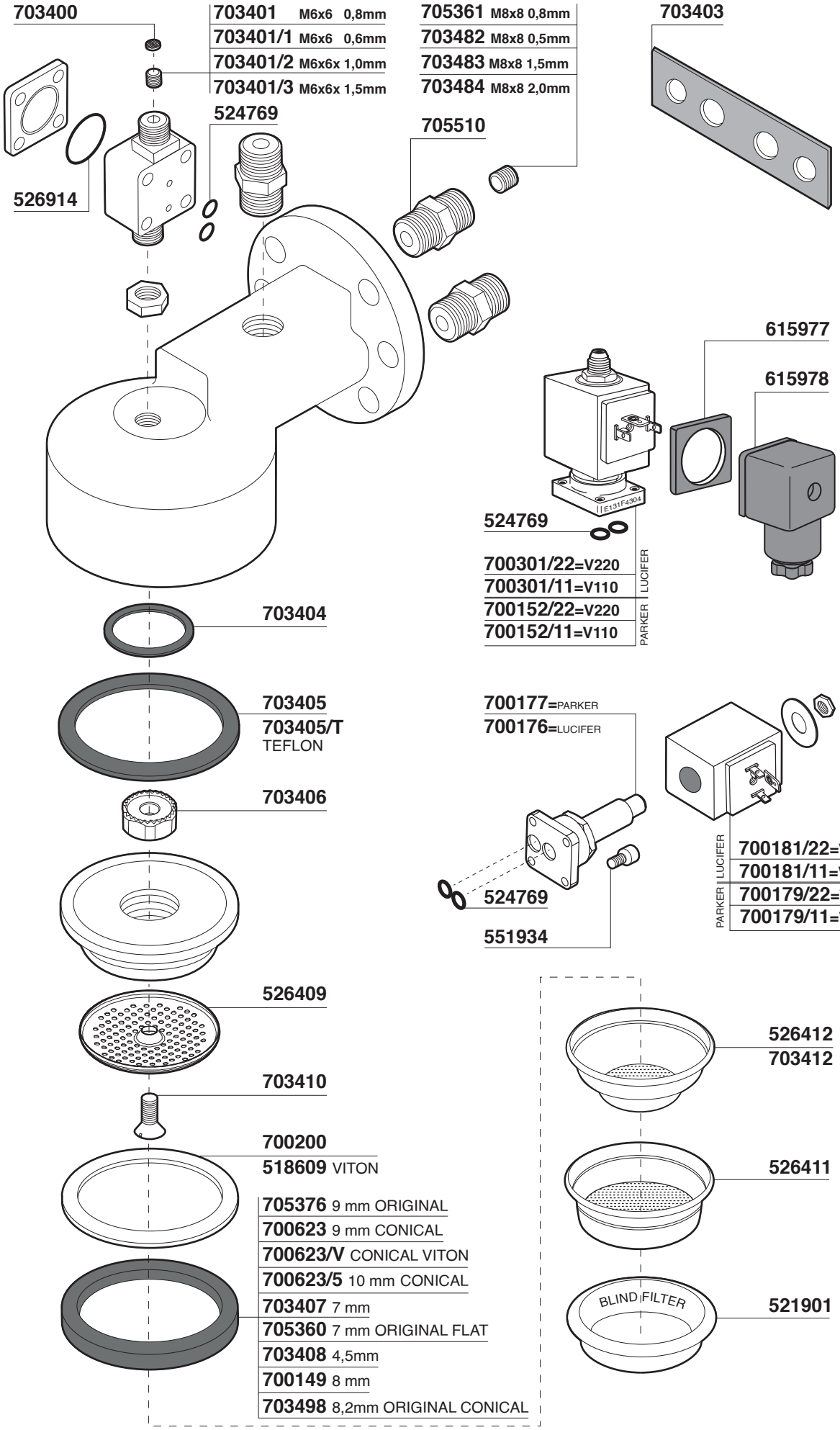

NUOVA SIMONELLI

Tav. 03

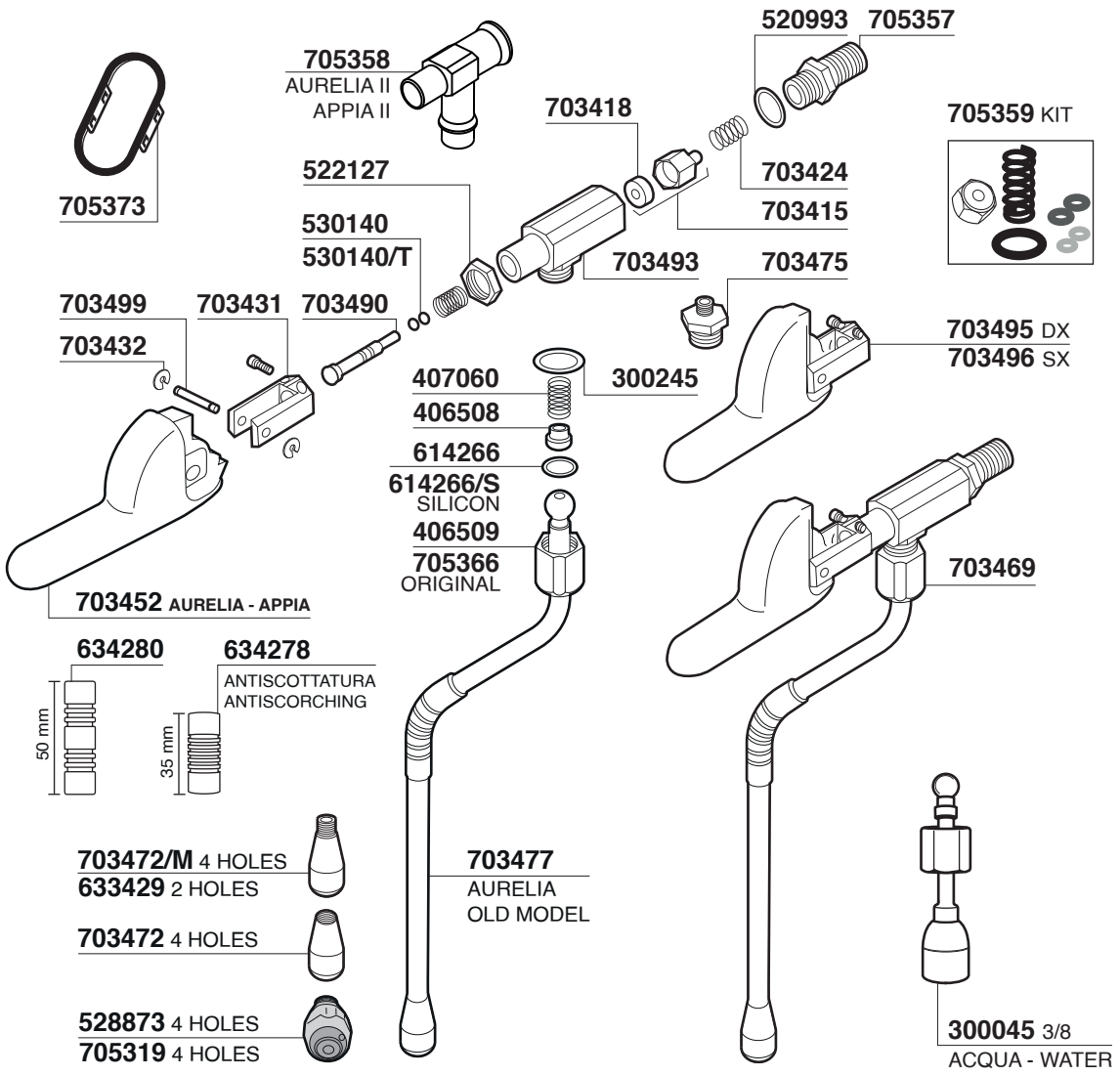

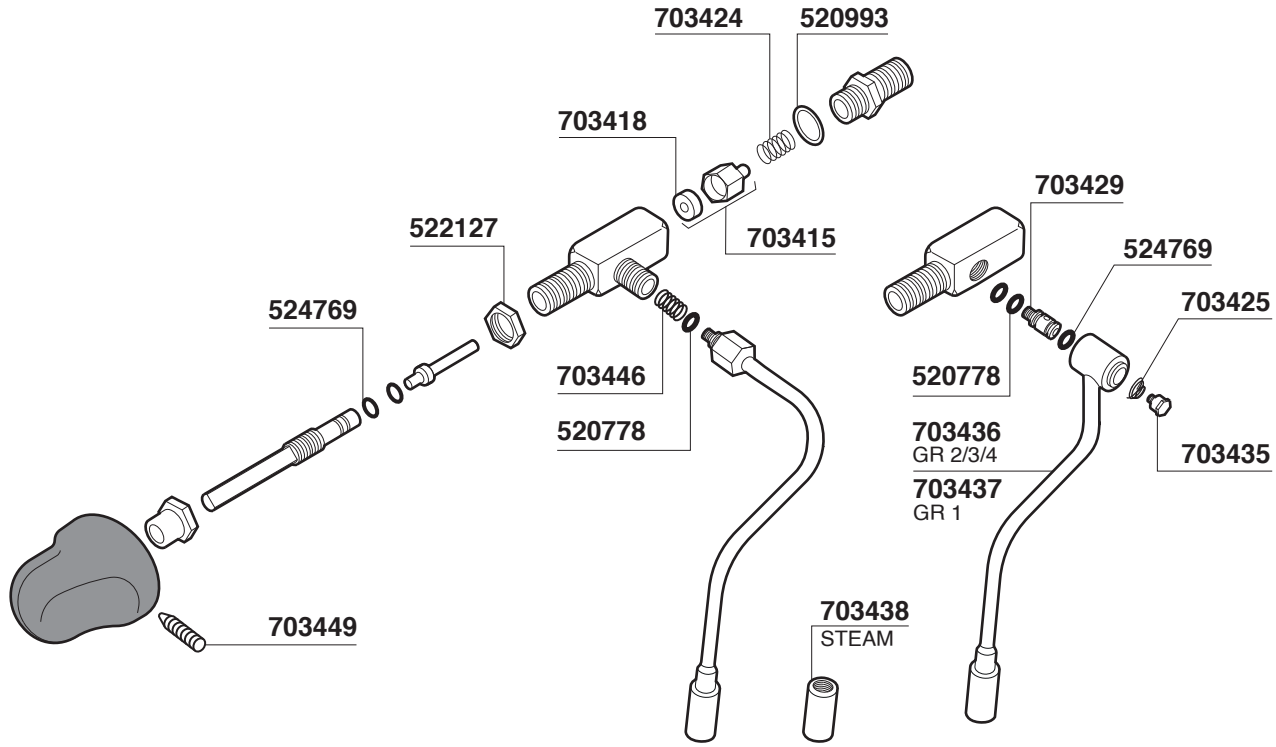

NUOVA SIMONELLI

Tav. 04

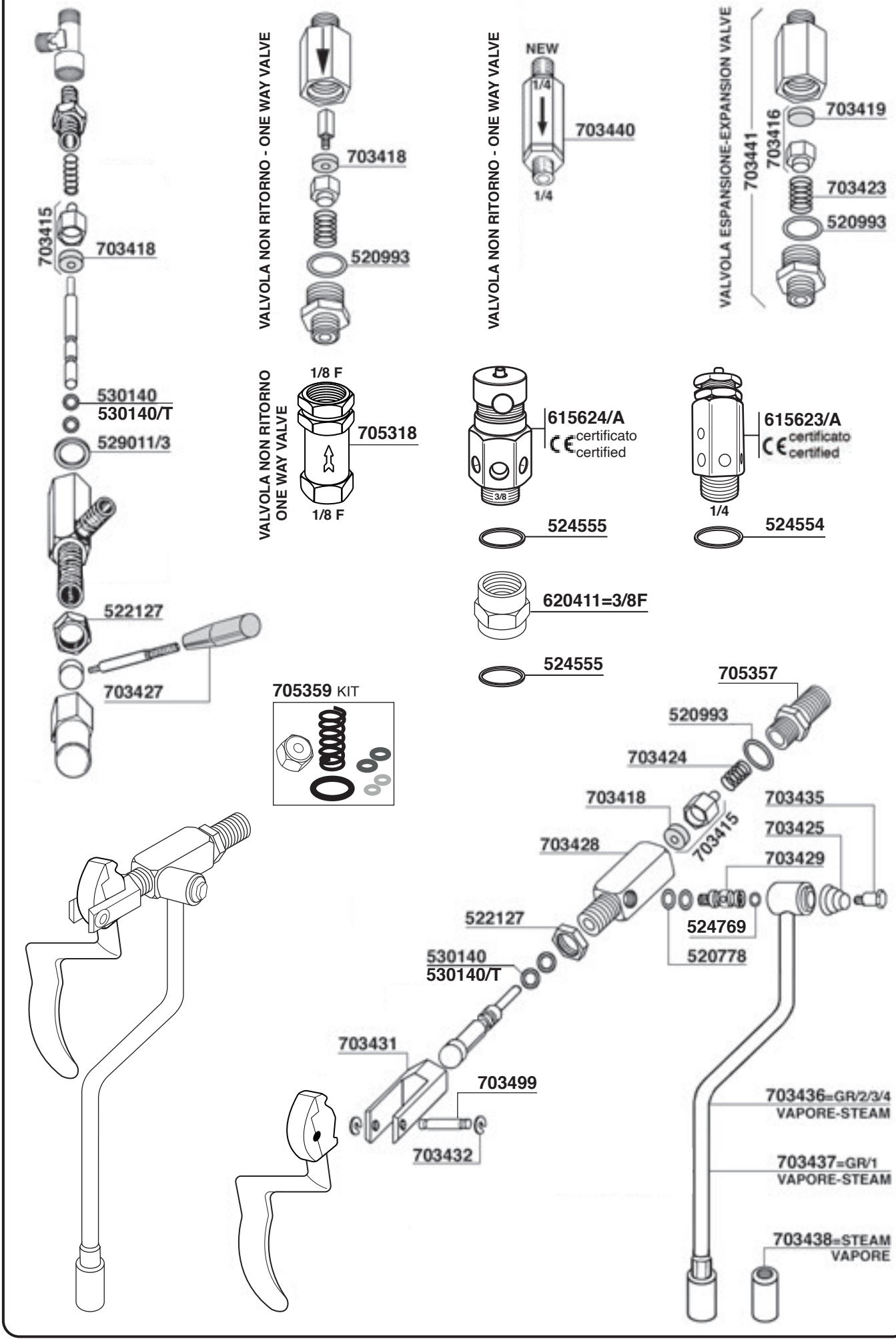

NUOVA SIMONELLI

Tav. 05

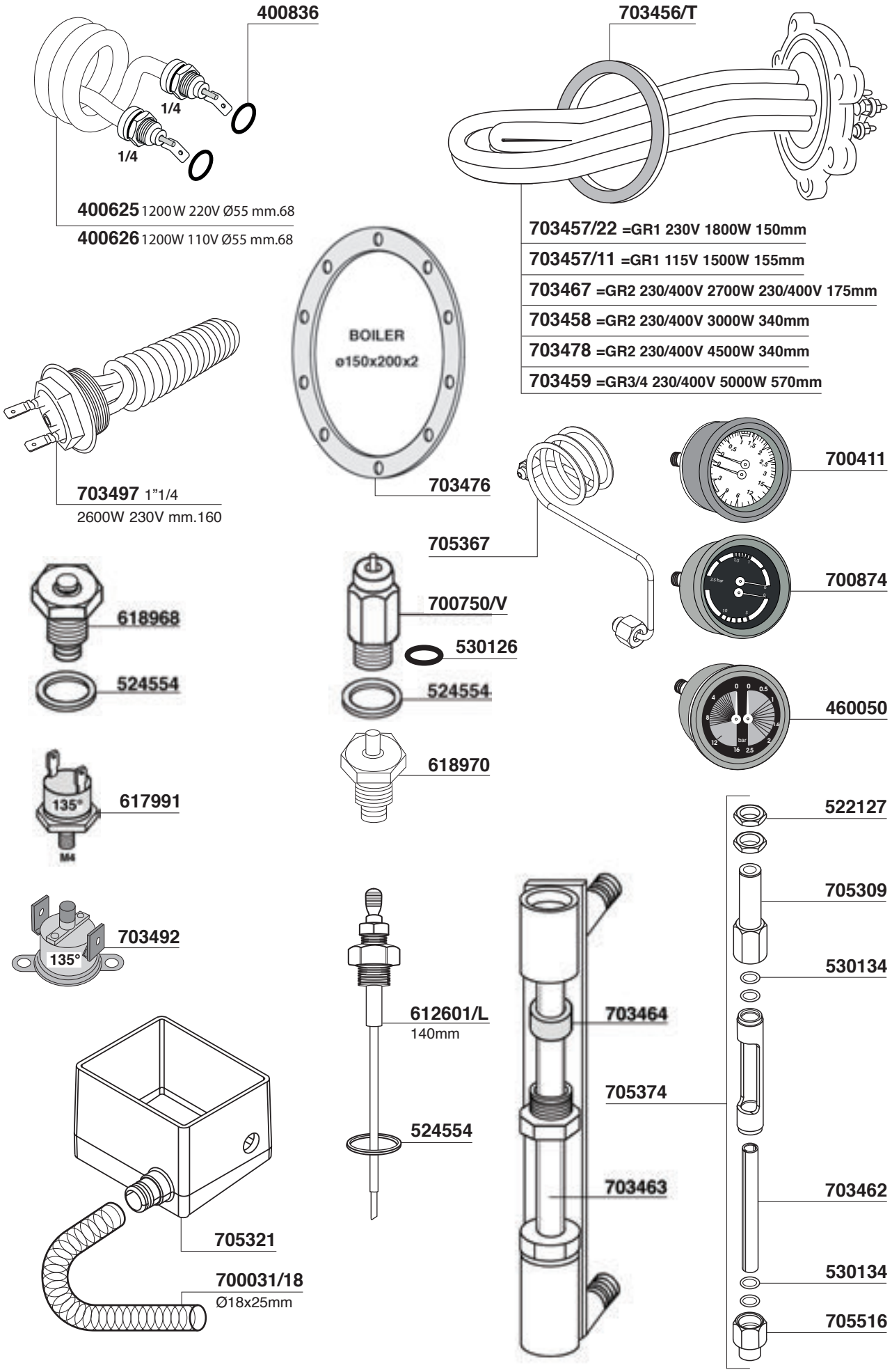

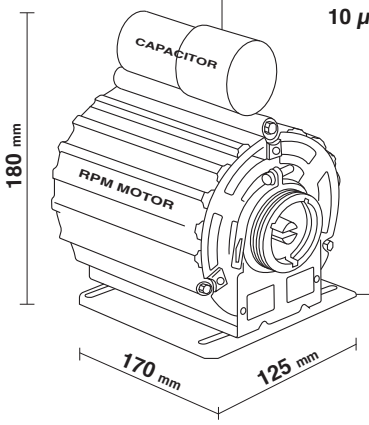

621347
CAPACITOR
CONDENSAT.
10 μF

703420

700084/22
V220/50/60 W165 HP0,2 WITH CABLE

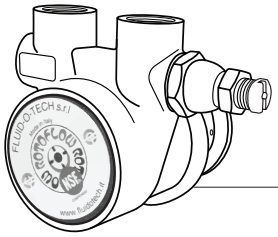

620406 150 Lt/h INOX-STAINLESS STEEL
620406/2 200 Lt/h
620406/1 100 Lt/h

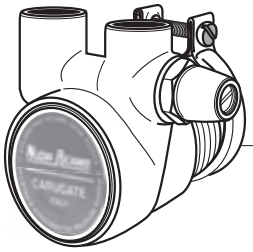

700055 100 Lt/h
700055/2 200 Lt/h
700048/X 100 Lt/h
INOX-STAINLESS STEEL

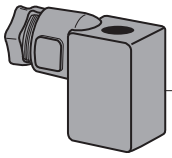

615978/T

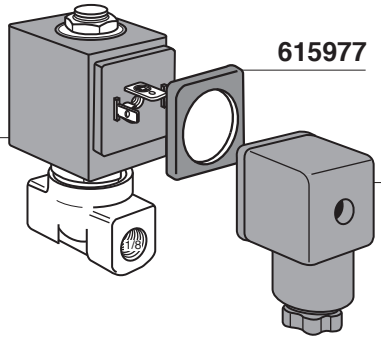

615977

632017/22=V220
632017/11=V110

615978

615979

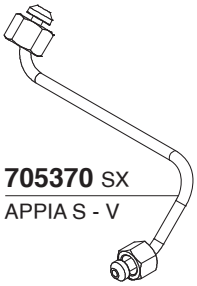

705370 SX
APPIA S - V

530148

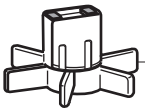

617903

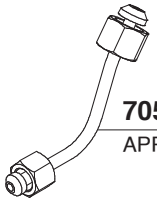

705369 DX
APPIA S - V

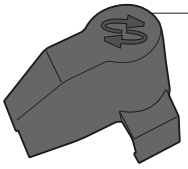

617902

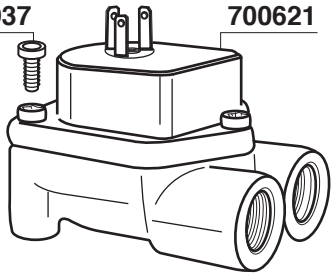

551937

700621

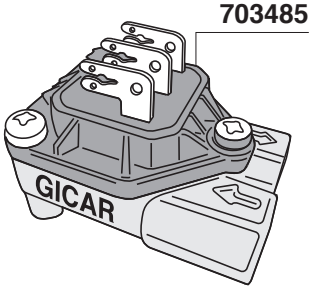

703485

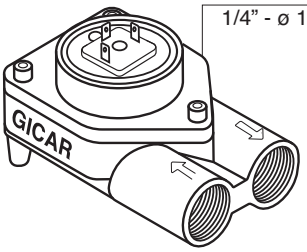

703480
1/4" - ø 1,2"

NUOVA SIMONELLI

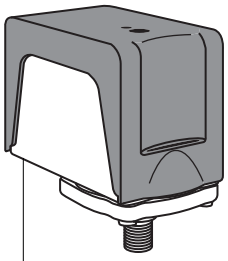

616597 CE/UL

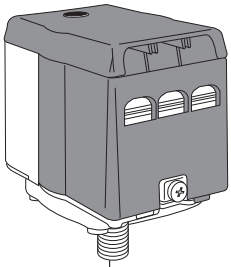

616592

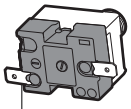

616604
CAMPINI
TY98/A FV
1,4 BAR

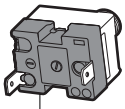

616605
CAMPINI
TY98/A FV
1,1 BAR

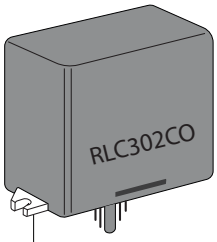

705313=V220

705320
OSCAR RL30/2S/3R 230V
GICAR CODE 9.1.40.61G

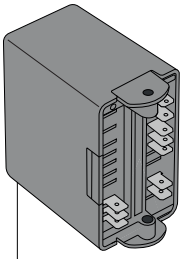

703494/11OSCAR
GICAR CODE 9.1.40.62G

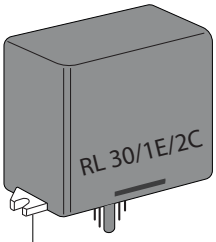

703468=V230
GICAR CODE 9.1.00.10G
703468/11=V115/120
GICAR CODE 9.1.00.19G

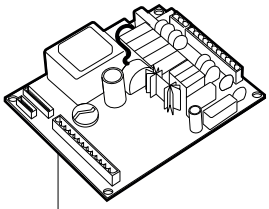

705372
GR. 2/3/4
AURELIA DIGIT/T3
VOL. (04900992)

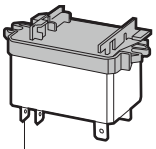

705322

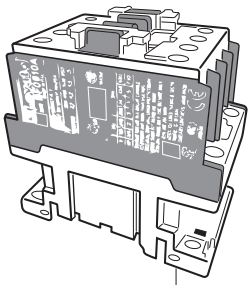

705314

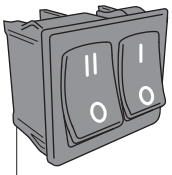

705312

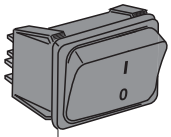

703453

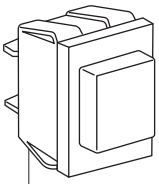

700180

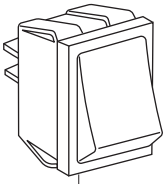

700429

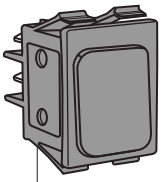

618014
RED LIGHT

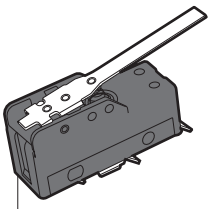

611297

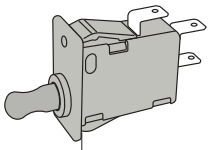

410151
3 POSIZIONI

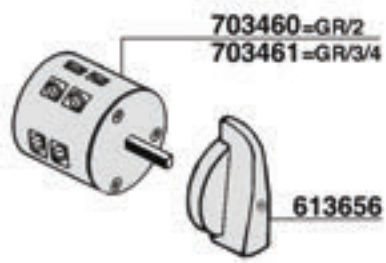

NUOVA SIMONELLI Tav. 08

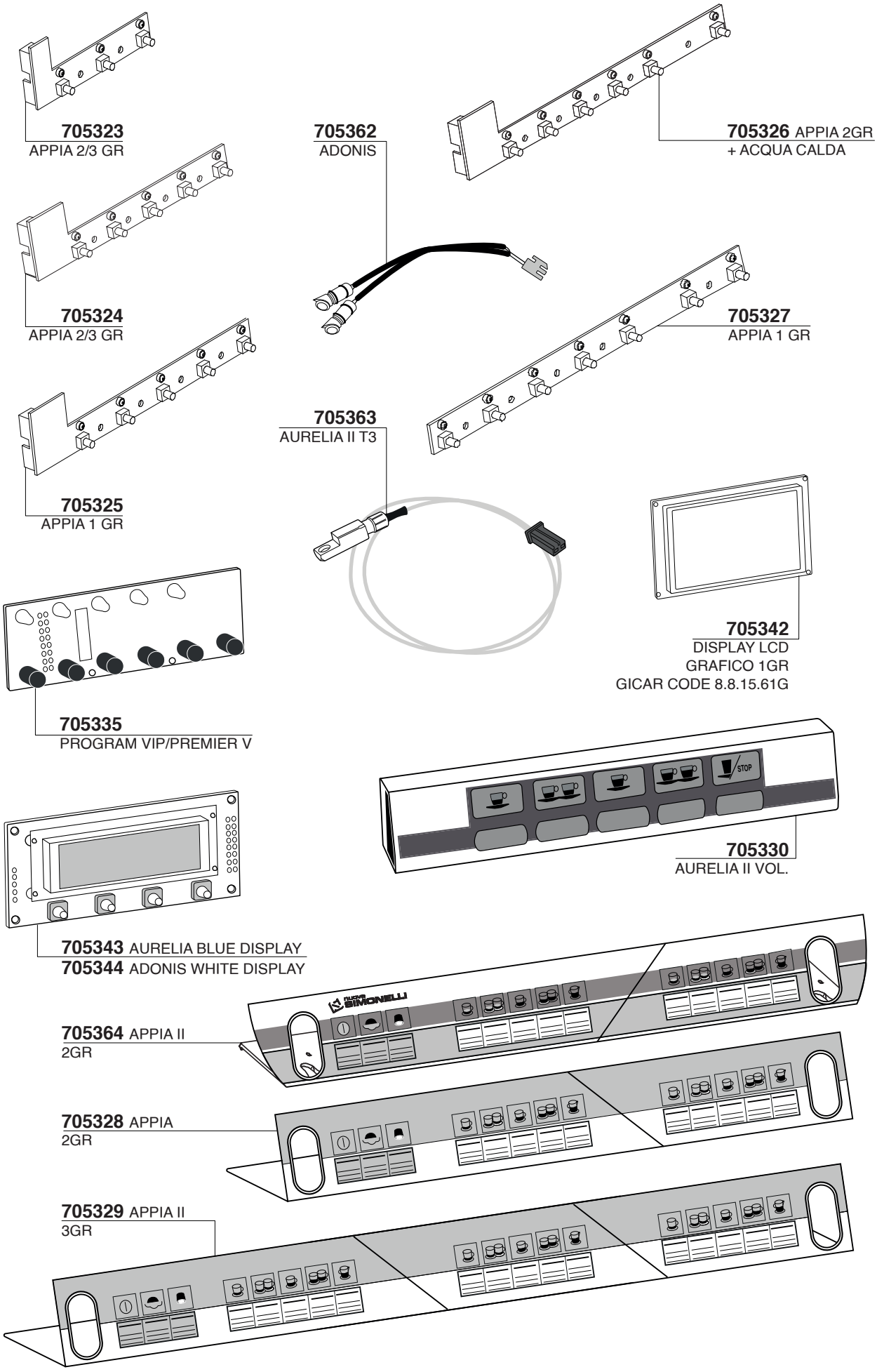

NUOVA SIMONELLI

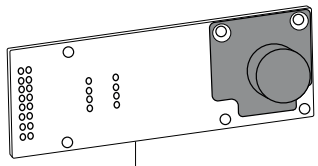

705331
G/S

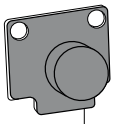

705341
G/S AURELIA

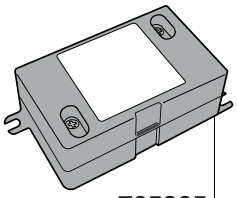

705365
DC 8W

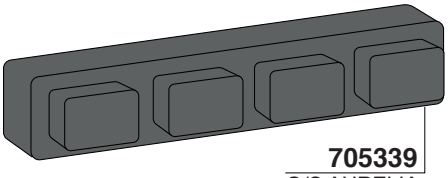

705339
G/S AURELIA

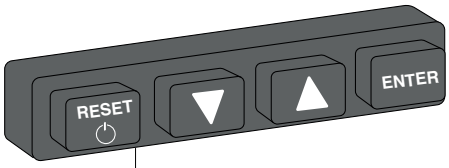

705338
G/S AURELIA

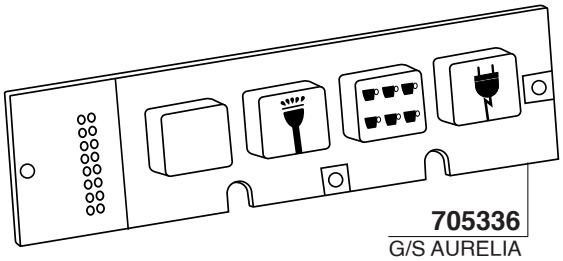

705336
G/S AURELIA

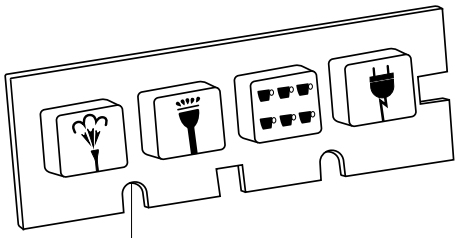

705337
G/S AURELIA

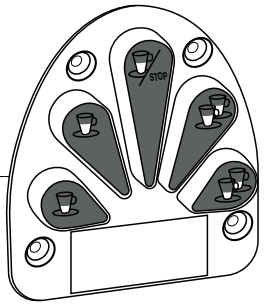

705345
ADONIS

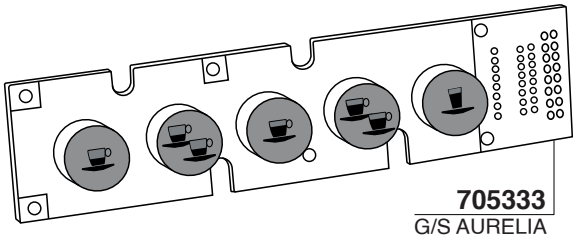

705333
G/S AURELIA

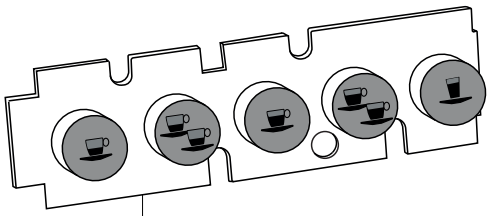

705334
G/S AURELIA

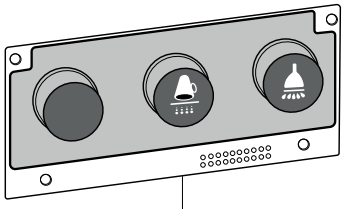

705332
ADONIS

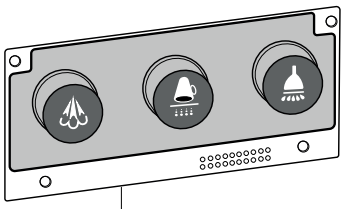

705346
ADONIS

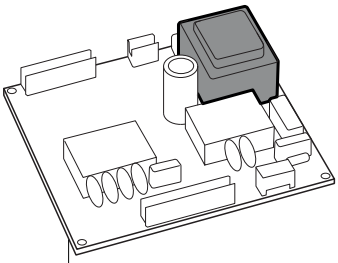

705347
AURELIA VIP 2GR

705352
AURELIA S 2GR

705356
AURELIA II V 2GR

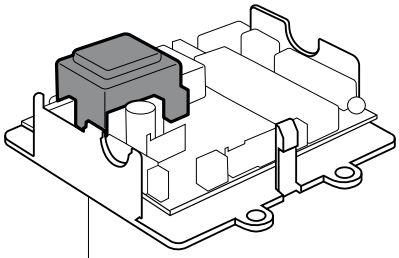

705353
AURELIA II/COMPACT
1/2/3 GR 230V

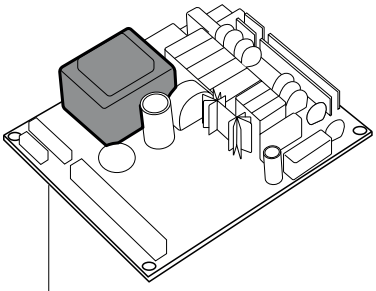

705310 AURELIA II “S” 3/4GR

705311 AURELIA II “V” 3/4GR

705348 AURELIA PLUS 3/4GR

705350 AURELIA V 3/4GR

705351 AURELIA S 3/4GR

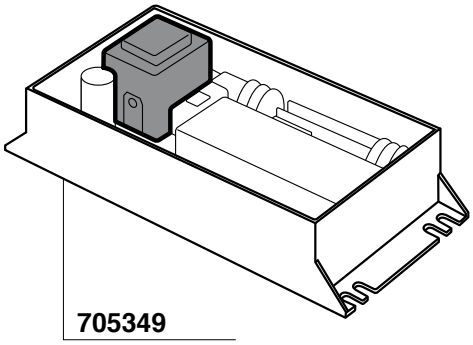

705349
AURELIA V 2GR

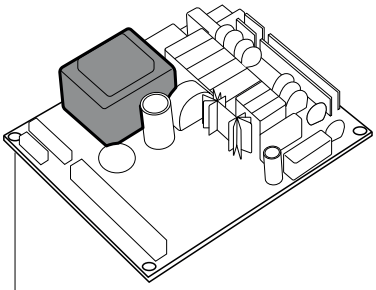

705372
AURELIA DIGIT/T3 2/3/4GR

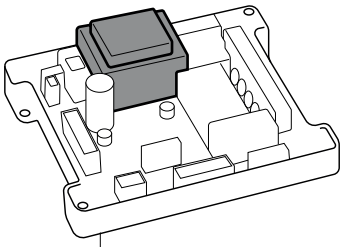

705315
2GR APPIA COMP.
APPIA II COMP. 230V

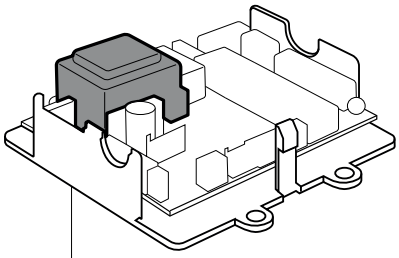

705317
2GR APPIA-APPIA II
VOLUMETRIC 230V

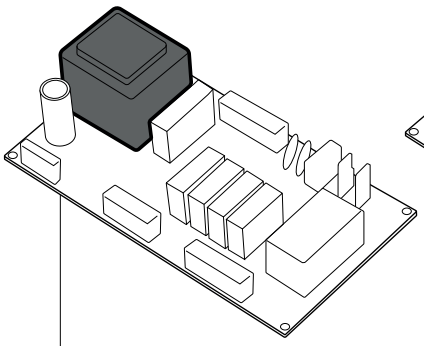

705354
APPIA 1GR 230V 50/60 Hz

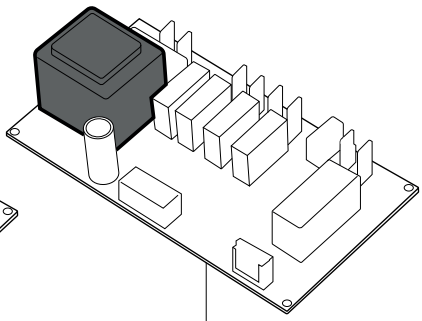

705355
MUSICA 230V

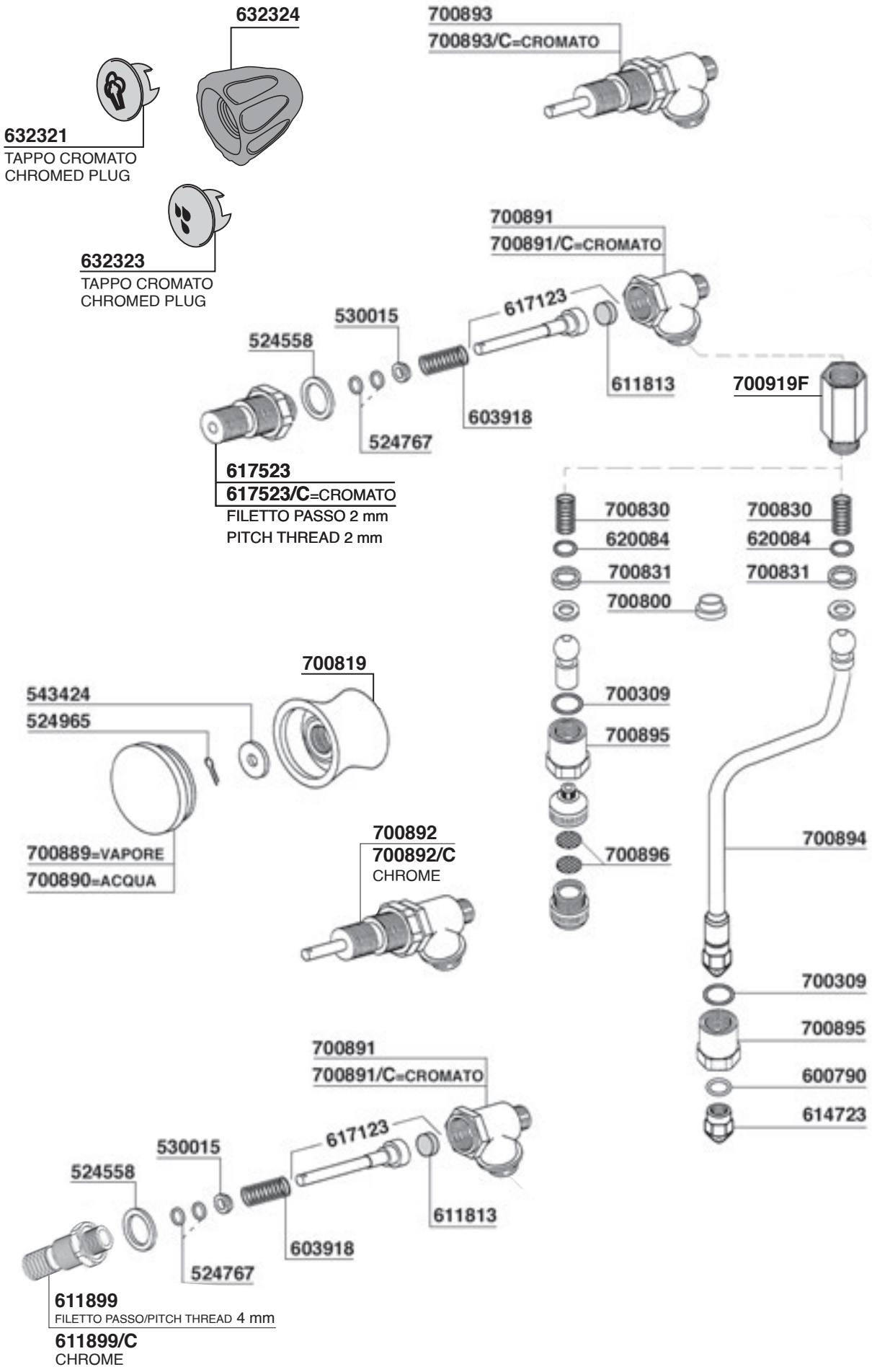
632324
632321
TAPPO CROMATO
CHROMED PLUG
632323
TAPPO CROMATO
CHROMED PLUG
700893
700893/C=CROMATO
700891
700891/C=CROMATO
617123
530015
524558
611813
700919F
603918
524767
617523
617523/C=CROMATO
FILETTO PASSO 2 mm
PITCH THREAD 2 mm
700830
620084
700831
700800
700830
620084
700831
700819
543424
524965
700309
700895
700889=VAPORE
700890=ACQUA
700892
700892/C
CHROME
700896
700894
700309
700895
600790
614723
700891
700891/C=CROMATO
617123
530015
524558
611813
603918
524767
611899
FILETTO PASSO/PITCH THREAD 4 mm
611899/C
CHROME

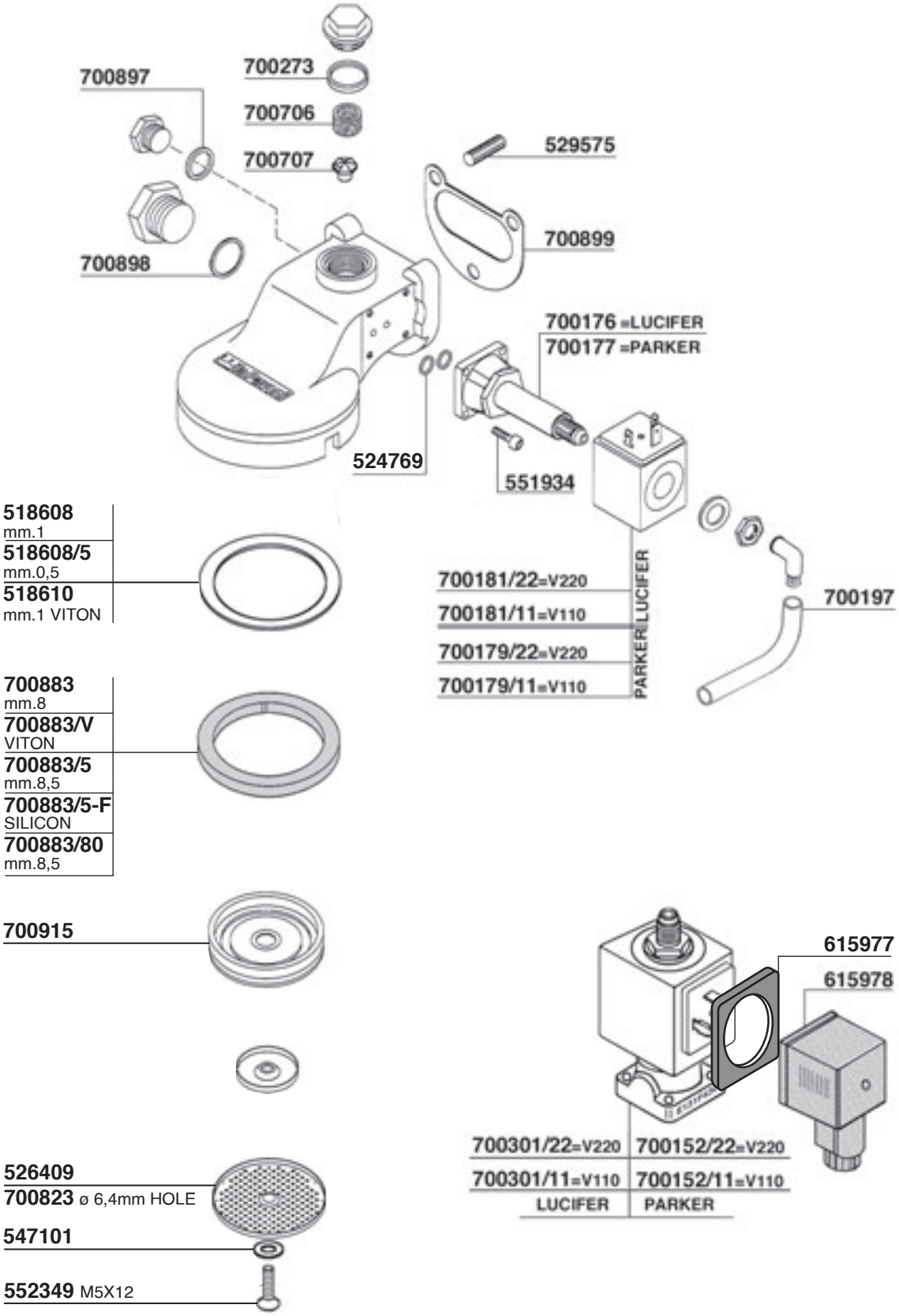
700897
700273
700706
700707
529575
700899
700898
700176 =LUCIFER
700177 =PARKER
524769
551934
518608
mm.1
518608/5
mm.0,5
518610
mm.1 VITON
700181/22=V220
700181/11=V110
700179/22=V220
700179/11=V110
PARKER LUCIFER
700197
700883
mm.8
700883/V
VITON
700883/5
mm.8,5
700883/5-F
SILICON
700883/80
mm.8,5
700915
615977
615978
700301/22=V220
700301/11=V110
LUCIFER
700152/22=V220
700152/11=V110
PARKER
526409
700823 ø 6,4mm HOLE
547101
552349 M5X12

PAVONI

Tav. 03

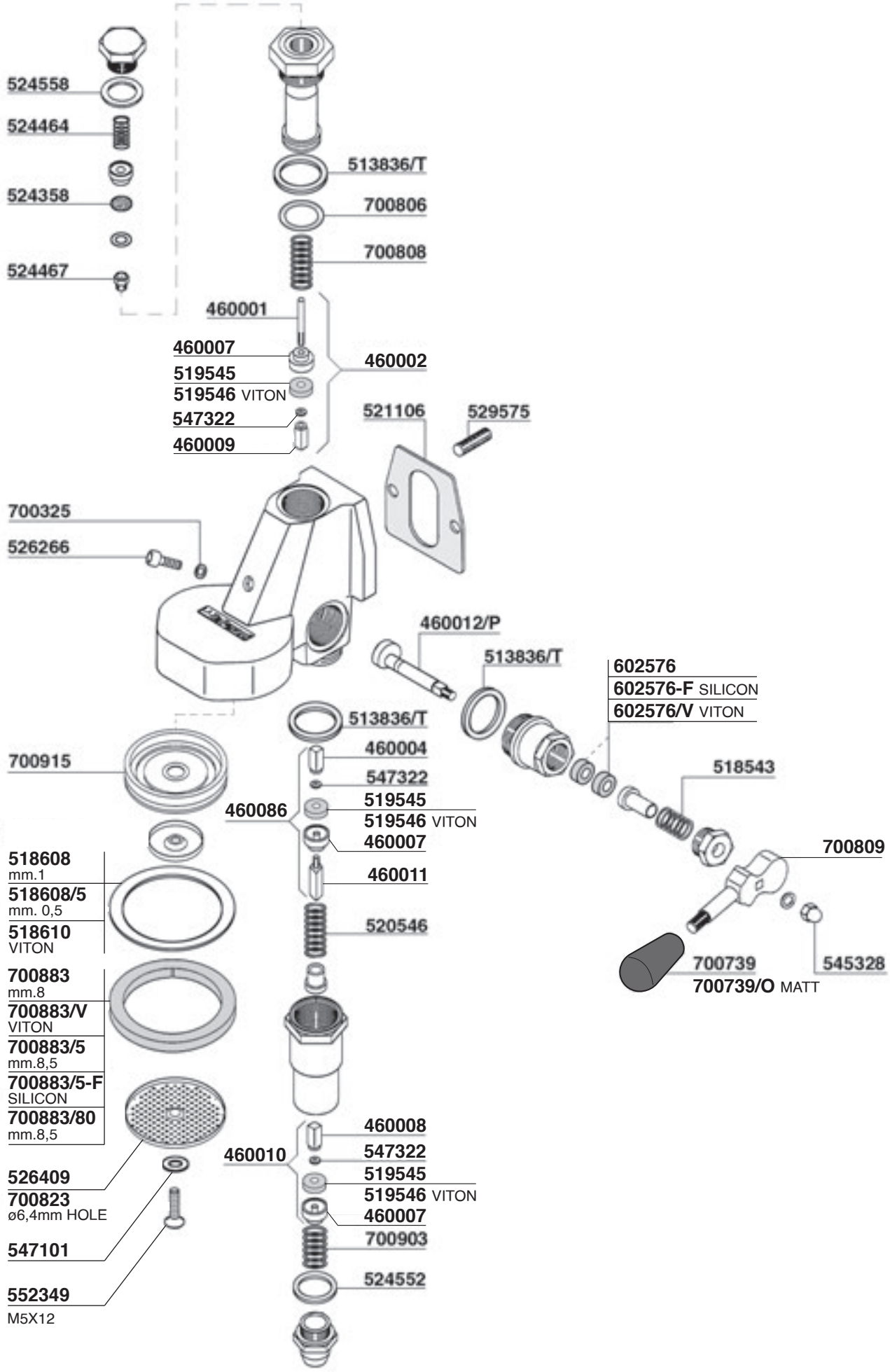

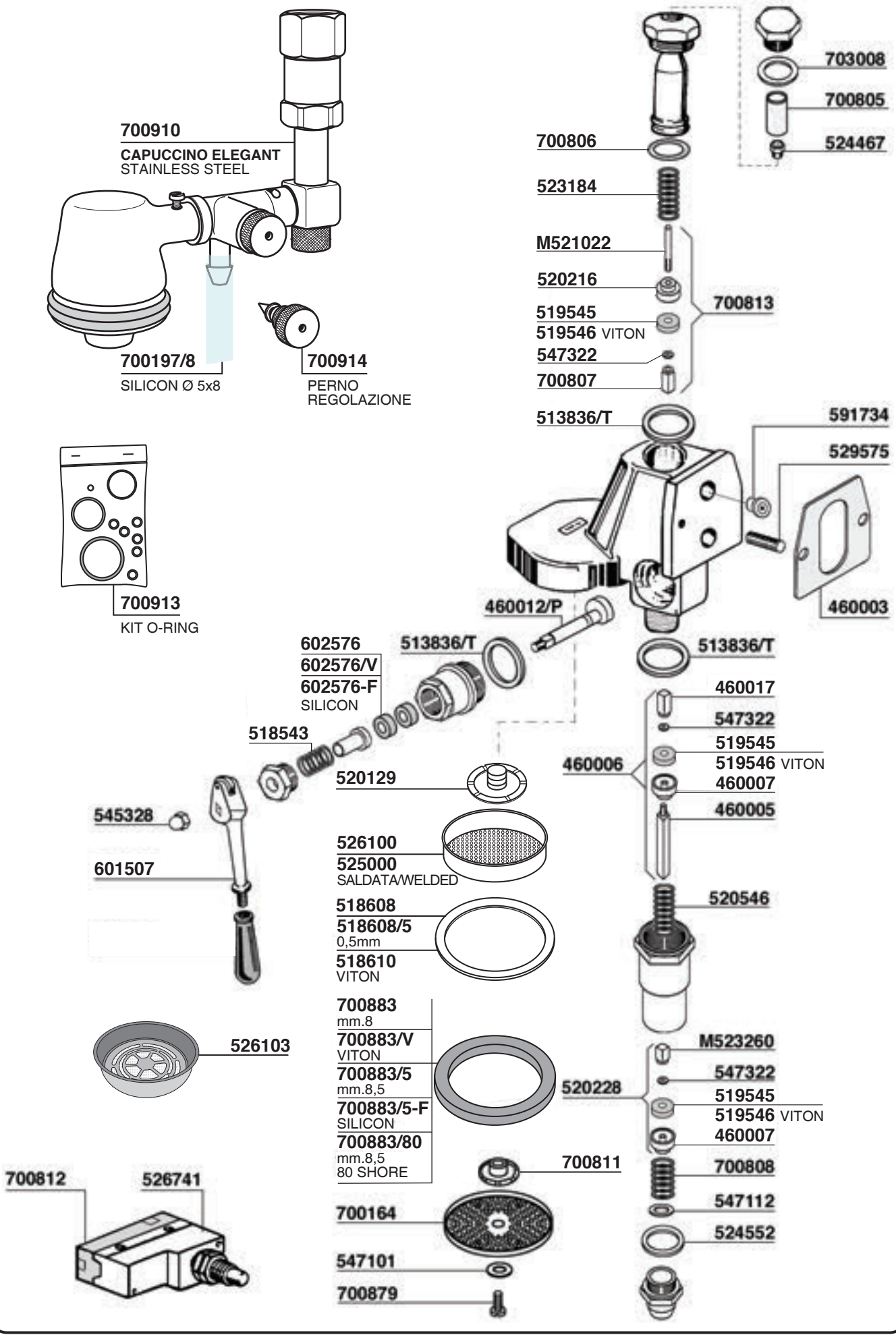
700910
CAPUCCINO ELEGANT
STAINLESS STEEL
700197/8
SILICON Ø 5x8
700914
PERNO
REGOLAZIONE
700913
KIT O-RING
703008
700805
524467
700806
523184
M521022
520216
519545
519546 VITON
547322
700807
700813
513836/T
591734
529575
460003
460012/P
602576
602576/V
602576-F
SILICON
513836/T
513836/T
518543
520129
460017
547322
519545
519546 VITON
460006
460007
460005
545328
601507
526100
525000
SALDATA/WELDED
520546
518608
518608/5
0,5mm
518610
VITON
526103
700883
mm.8
700883/V
VITON
700883/5
mm.8,5
700883/5-F
SILICON
700883/80
mm.8,5
80 SHORE
M523260
547322
520228
519545
519546 VITON
460007
700811
700808
547112
524552
700812
526741
700164
547101
700879

PAVONI

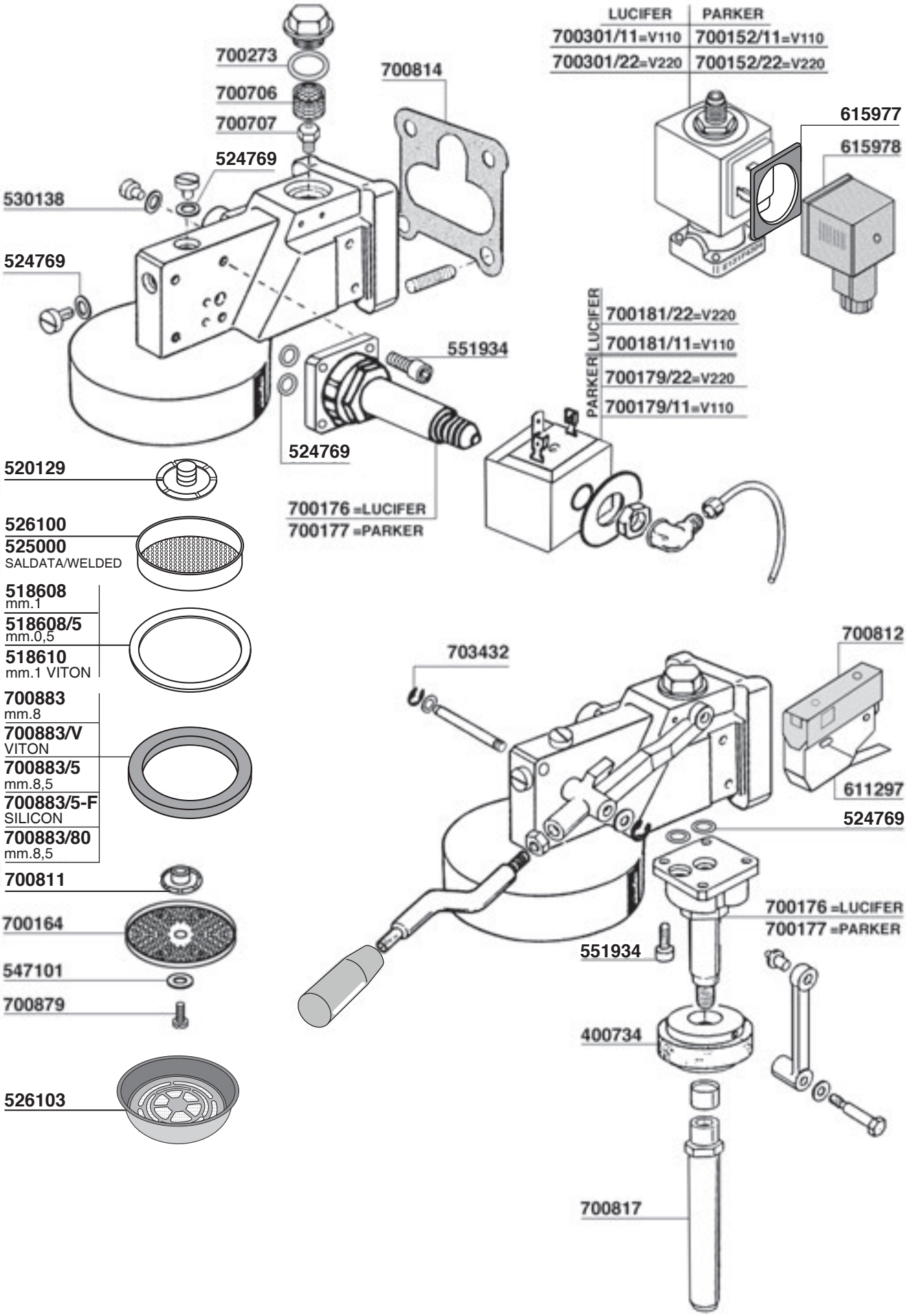
LUCIFER
PARKER
700301/11=V110
700152/11=V110
700301/22=V220
700152/22=V220
700273
700706
700707
700814
524769
530138
524769
615977
615978
551934
524769
700181/22=V220
700181/11=V110
700179/22=V220
700179/11=V110
LUCIFER
PARKER
700176 =LUCIFER
700177 =PARKER
520129
526100
525000
SALDATA/WELDED
518608
mm.1
518608/5
mm.0,5
518610
mm.1 VITON
700883
mm.8
700883/V
VITON
700883/5
mm.8,5
700883/5-F
SILICON
700883/80
mm.8,5
700811
700164
547101
700879
526103
703432
700812
611297
524769
700176 =LUCIFER
700177 =PARKER
551934
400734
700817

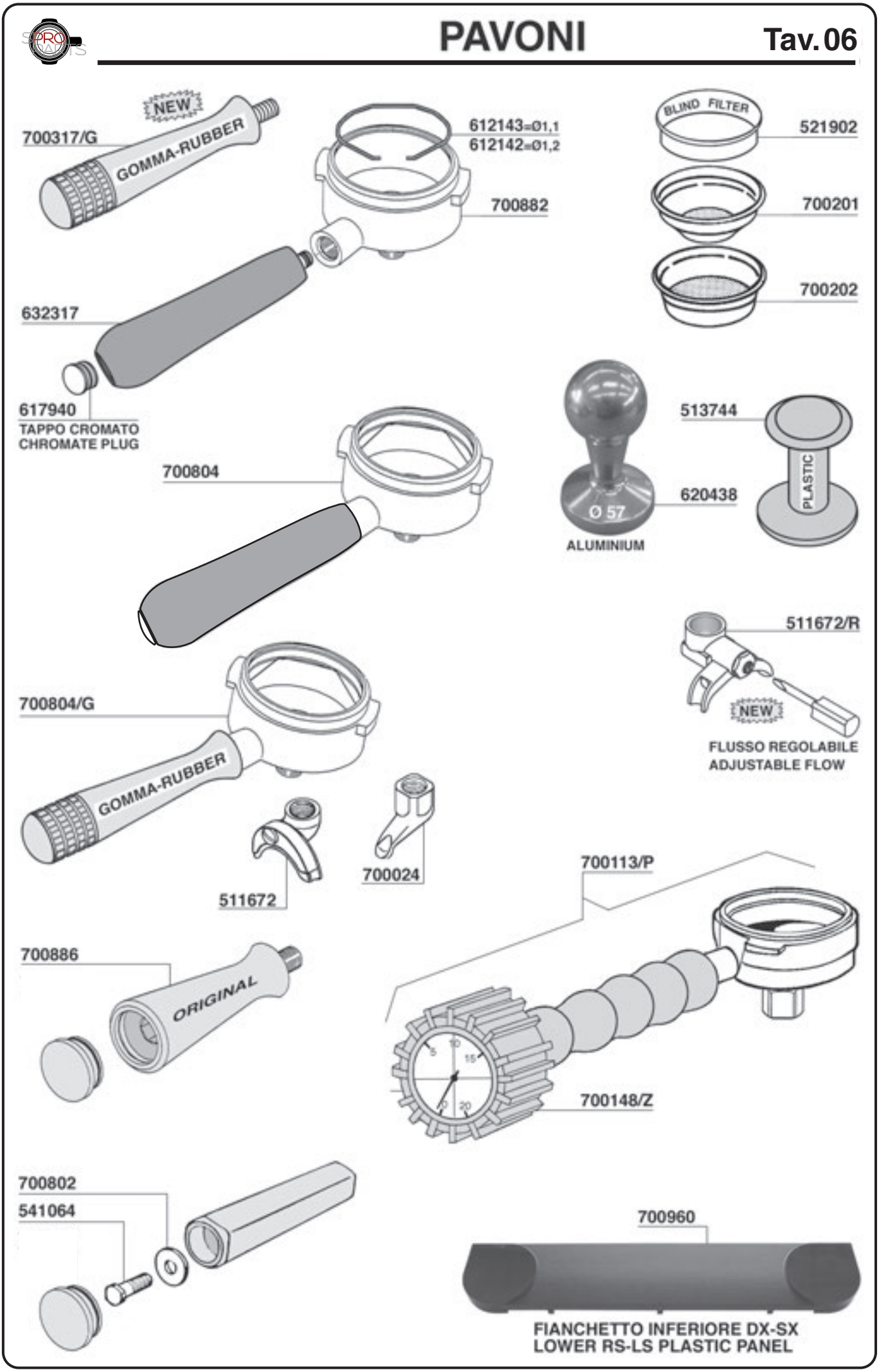
NEW
700317/G
GOMMA-RUBBER
612143=Ø1,1
612142=Ø1,2
700882
BLIND FILTER
521902
700201
700202
632317
617940
TAPPO CROMATO
CHROMATE PLUG
700804
513744
620438
Ø 57
ALUMINIUM
PLASTIC
511672/R
NEW
FLUSSO REGOLABILE
ADJUSTABLE FLOW
700804/G
GOMMA-RUBBER
511672
700024
700113/P
700886
ORIGINAL
700148/Z
700802
541064
700960
FIANCHETTO INFERIORE DX-SX
LOWER RS-LS PLASTIC PANEL

PAVONI

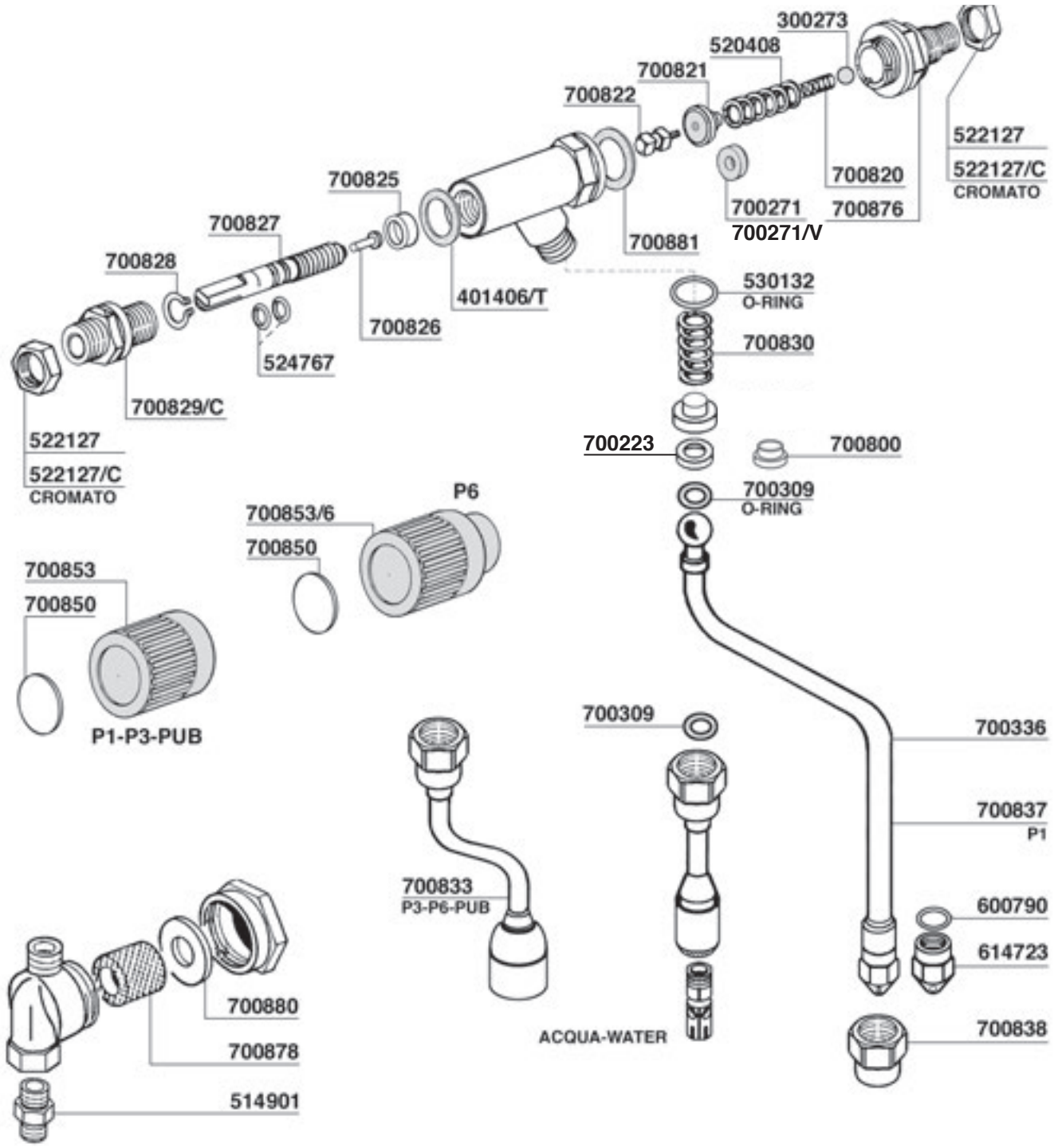
300273
520408
700821
700822
522127
522127/C
CROMATO
700820
700876
700271
700271/V
700881
700825
700827
700828
401406/T
530132
O-RING
700826
700830
524767
700829/C
522127
522127/C
CROMATO
700223
700800
700309
O-RING
P6
700853/6
700850
700853
700850
P1-P3-PUB
700309
700336
700837
P1
700833
P3-P6-PUB
600790
614723
700880
700878
ACQUA-WATER
700838
514901

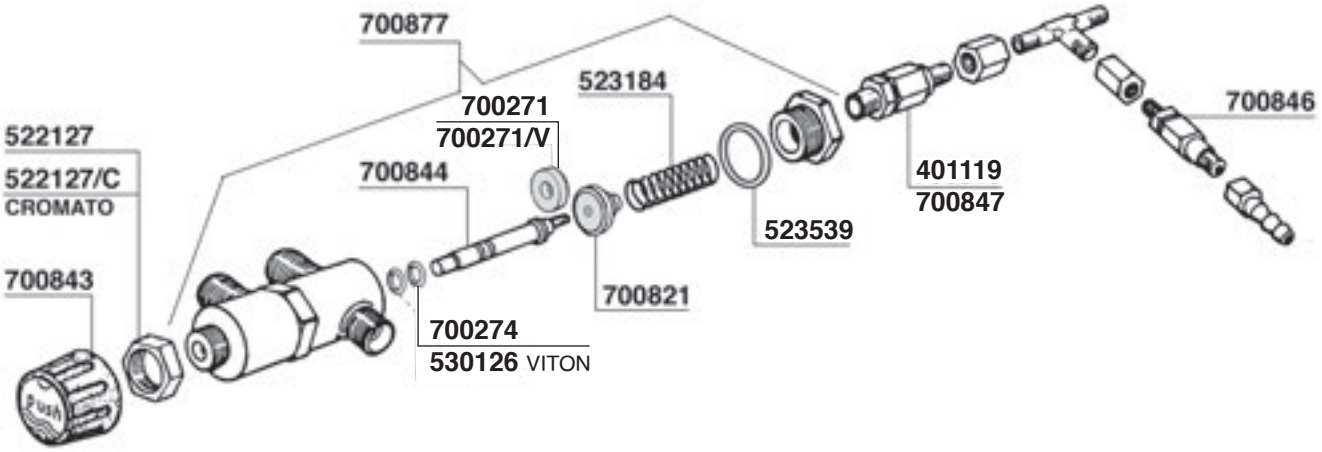
700877
523184
700271
700271/V
700846
522127
522127/C
CROMATO
700844
401119
700847
523539
700843
700821
700274
530126 VITON

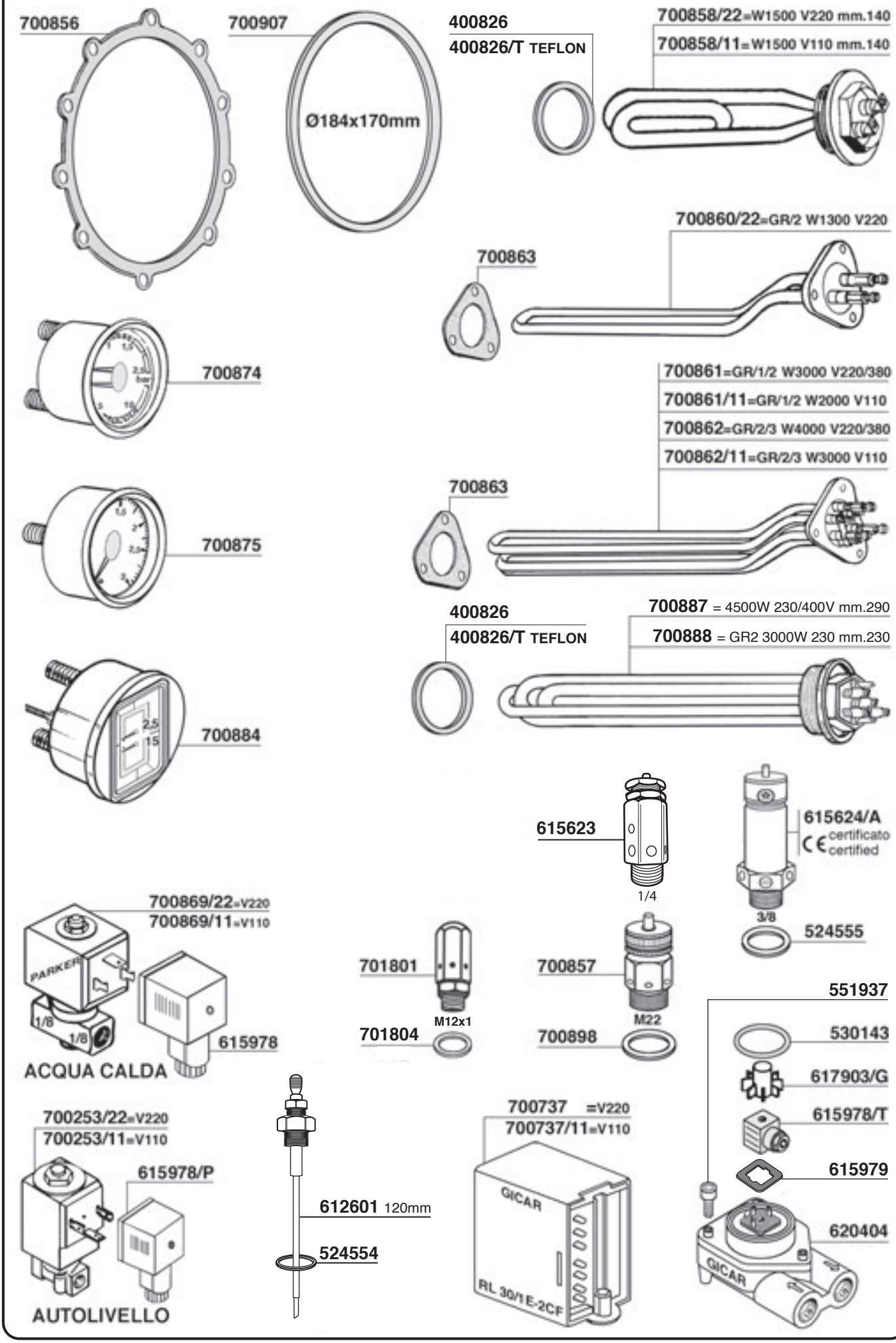
700856
700907
Ø184x170mm
400826
400826/T TEFLON
700858/22=W1500 V220 mm.140
700858/11=W1500 V110 mm.140
700860/22=GR/2 W1300 V220
700863
700874
700861=GR/1/2 W3000 V220/380
700861/11=GR/1/2 W2000 V110
700862=GR/2/3 W4000 V220/380
700862/11=GR/2/3 W3000 V110
700863
700875
400826
400826/T TEFLON
700887 = 4500W 230/400V mm.290
700888 = GR2 3000W 230 mm.230
700884
615623
1/4
615624/A
certificato
certified
3/8
524555
700869/22=V220
700869/11=V110
PARKER
1/8
1/8
615978
ACQUA CALDA
701801
M12x1
701804
700857
M22
700898
551937
530143
617903/G
615978/T
615979
620404
GICAR
700253/22=V220
700253/11=V110
615978/P
AUTOLIVELLO
612601 120mm
524554
700737 =V220
700737/11=V110
GICAR
RL 30/1E-2CF

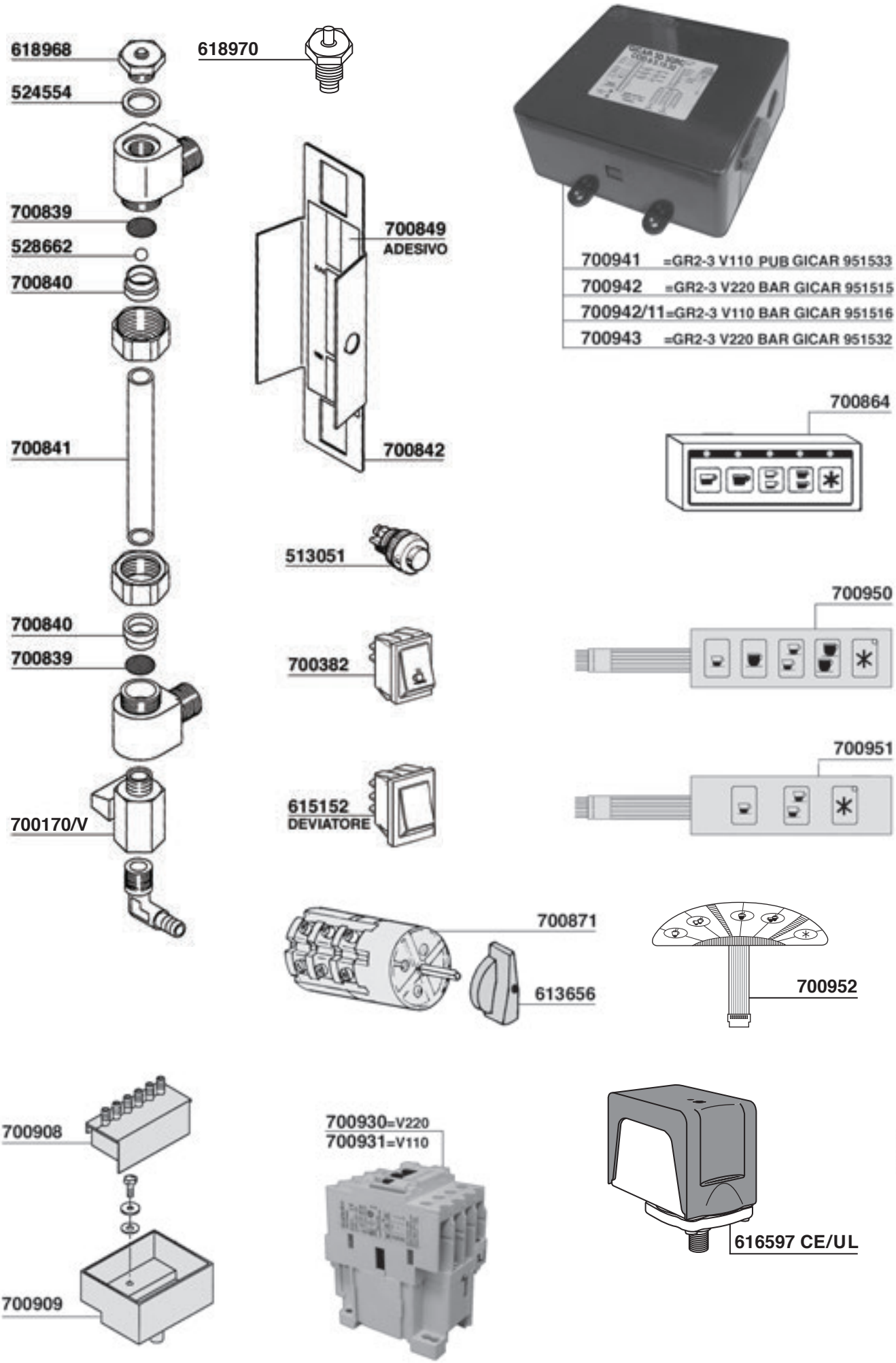
618968
618970
524554
700839
528662
700840
700841
700840
700839
700170/V
700849
ADESIVO
700842
513051
700382
615152
DEVIATORE
700941 =GR2-3 V110 PUB GICAR 951533
700942 =GR2-3 V220 BAR GICAR 951515
700942/11=GR2-3 V110 BAR GICAR 951516
700943 =GR2-3 V220 BAR GICAR 951532
700864
700950
700951
700871
613656
700952
700908
700909
700930=V220
700931=V110
616597 CE/UL

PAVONI

Tav. 10

EUROPICCOLA - PROFESSIONAL

MODELLO CROMATO - CHROMED MODEL

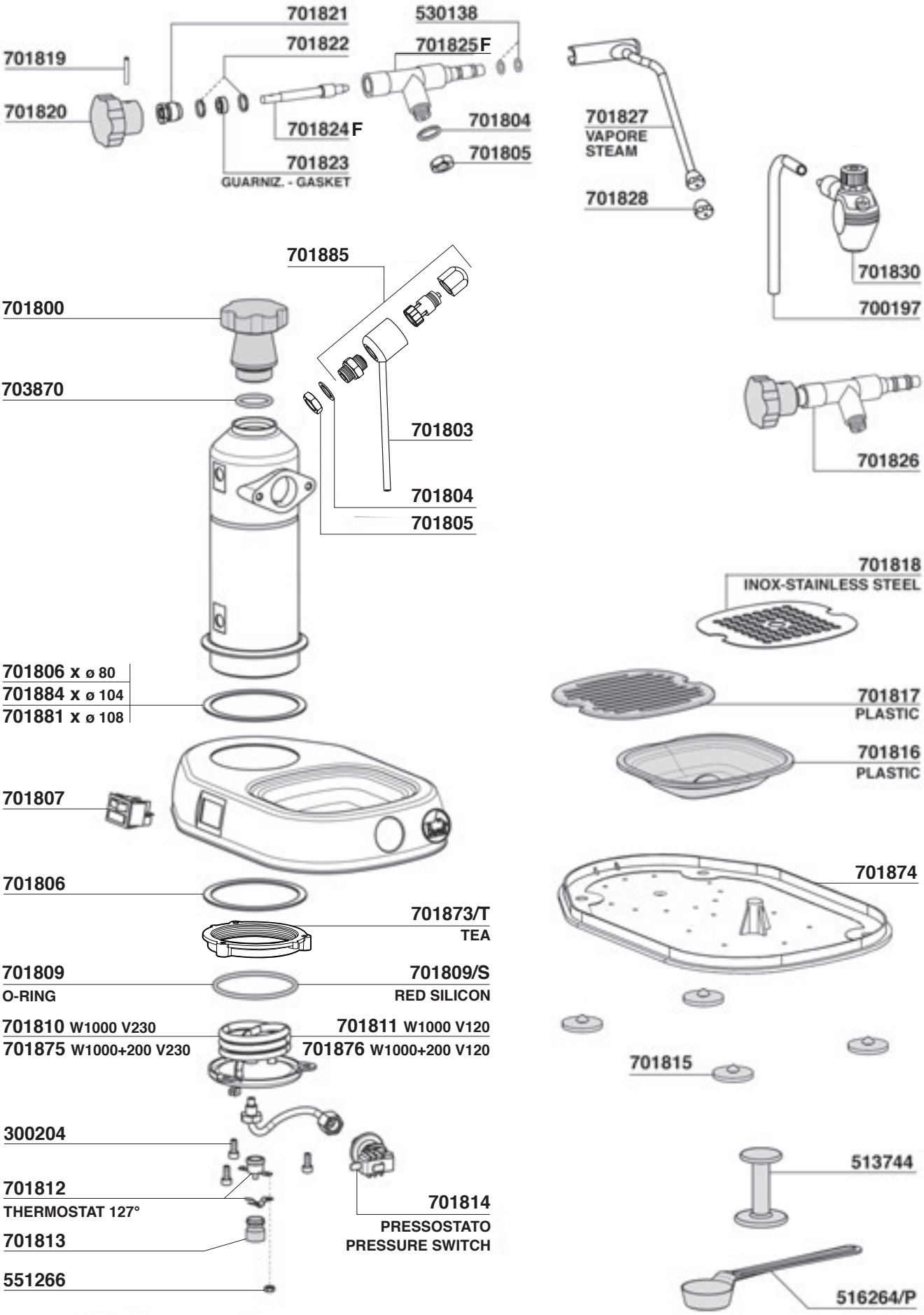

PAVONI

EUROPICCOLA - PROFESSIONAL

MODELLO CROMATO - CHROMED MODEL

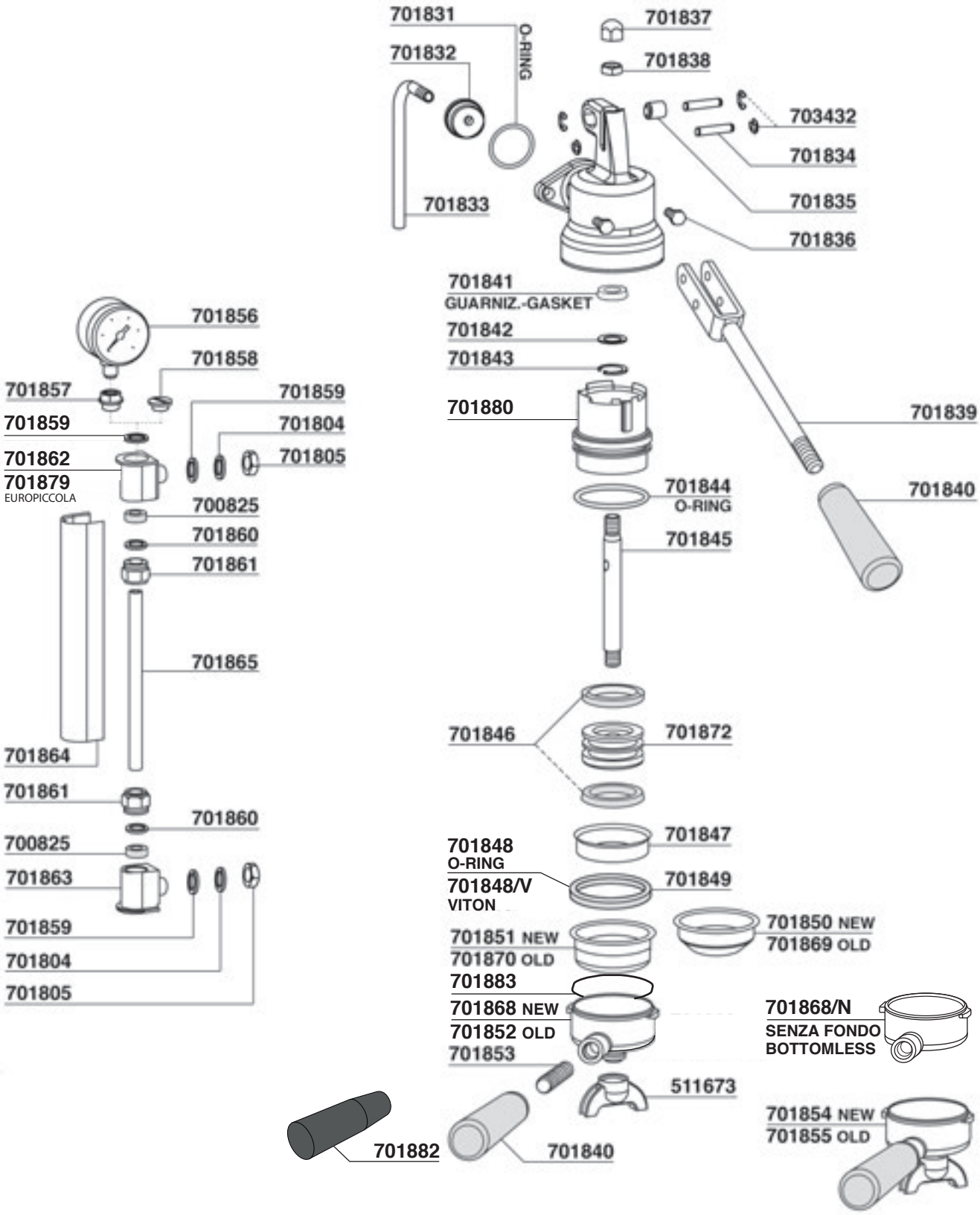

KIT COMPLETO GUARIZIONI EUROPICCOLA
EUROPICCOLA GASKET COMPLETE KIT — COD. 701866

KIT COMPLETO GUARNIZIONI PROFESSIONAL
PROFESSIONAL GASKET COMPLETE KIT — COD.701867

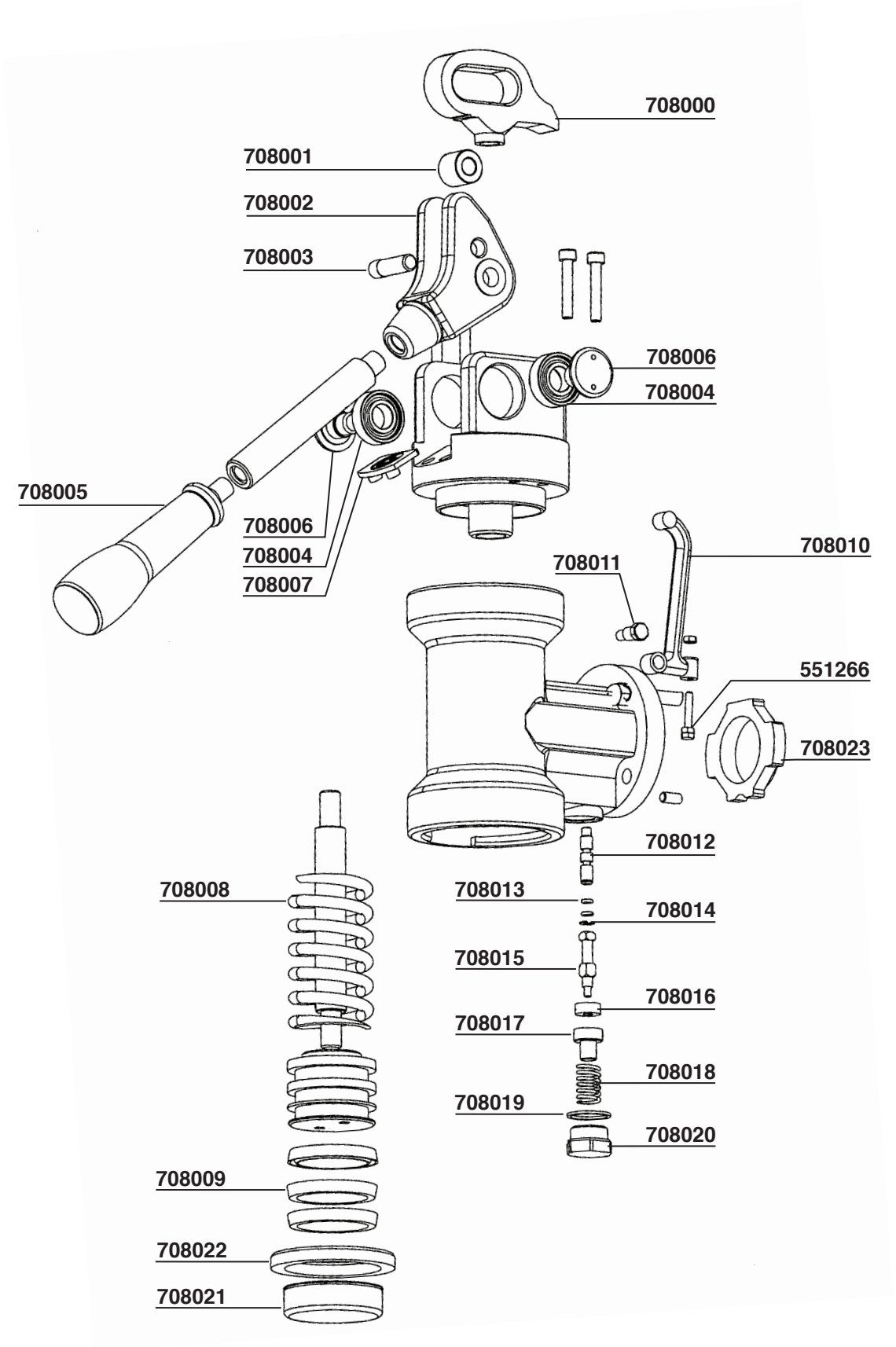
708000
708001
708002
708003
708006
708004
708005
708006
708004
708007
708010
708011
551266
708023
708012
708008
708013
708014
708015
708016
708017
708018
708019
708020
708009
708022
708021

PROFITEC

Tav. 01

PRO 500 - PRO 600

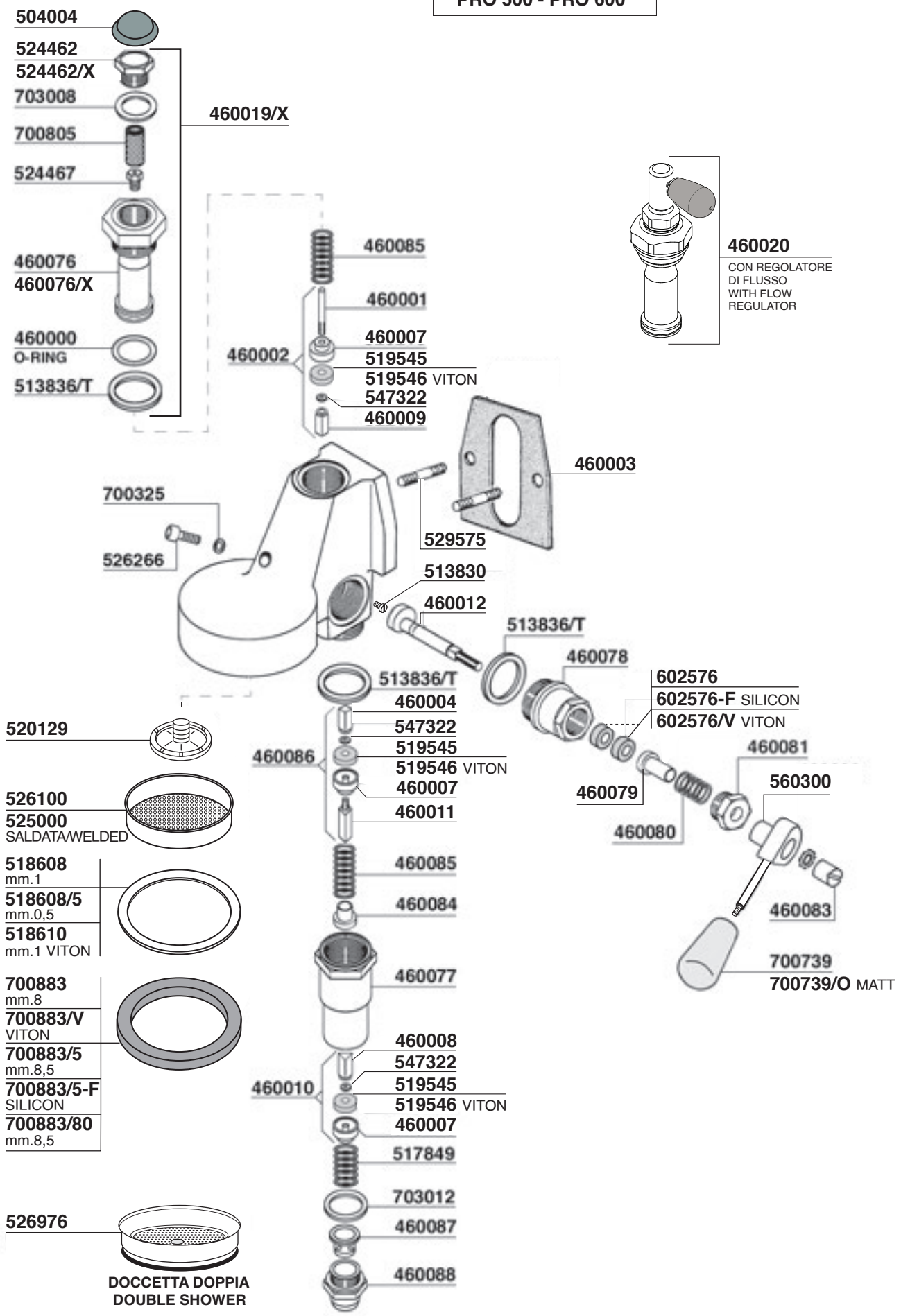

PRO 700

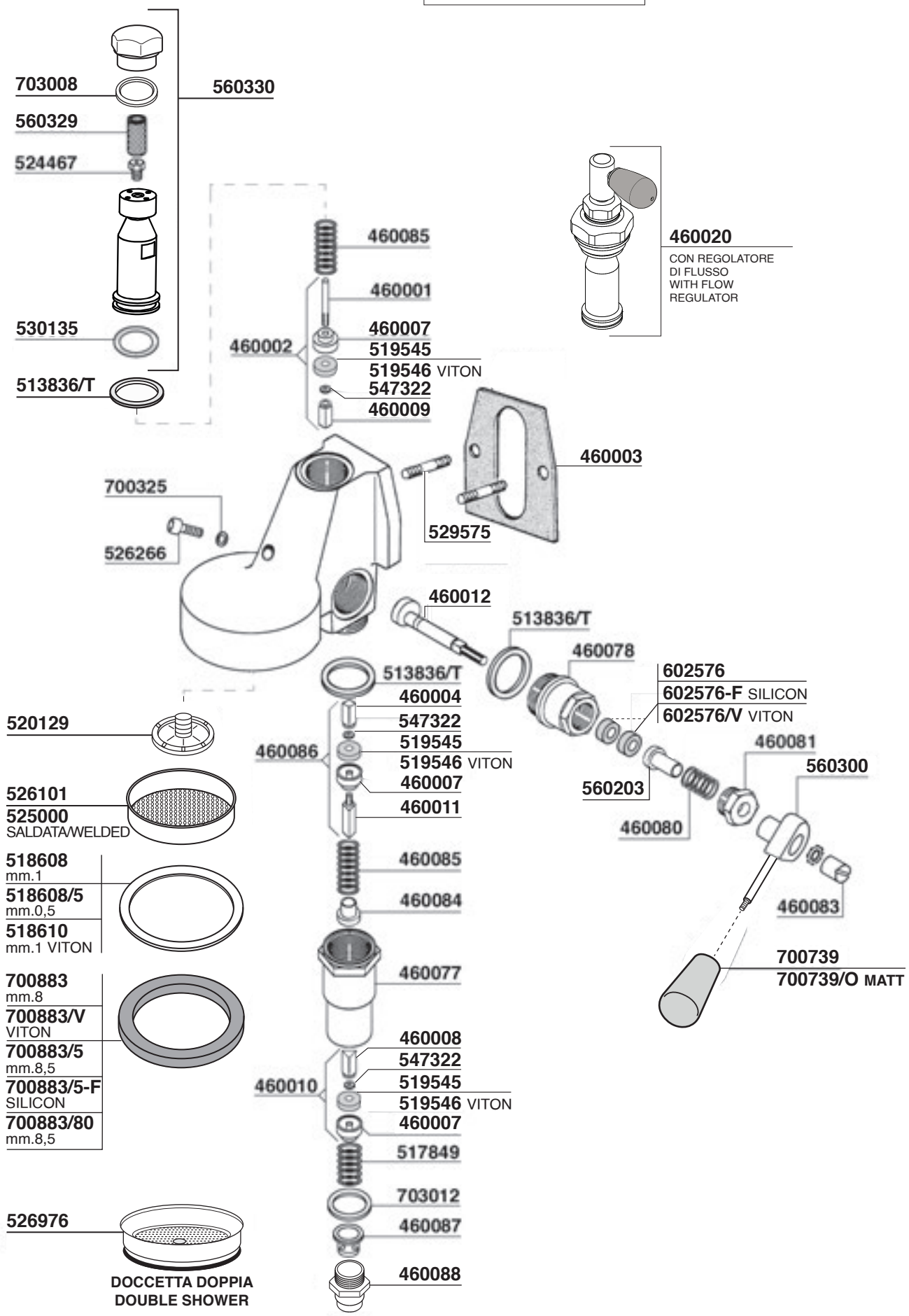
703008
560330
560329
524467
530135
513836/T
460085
460001
460002
460007
519545
519546 VITON
547322
460009
460020
CON REGOLATORE
DI FLUSSO
WITH FLOW
REGULATOR
460003
700325
526266
529575
460012
513836/T
460078
602576
602576-F SILICON
602576/V VITON
513836/T
460004
547322
519545
519546 VITON
460007
460011
460086
520129
526101
525000
SALDATA/WELDED
518608
mm.1
518608/5
mm.0,5
518610
mm.1 VITON
700883
mm.8
700883/V
VITON
700883/5
mm.8,5
700883/5-F
SILICON
700883/80
mm.8,5
460085
460084
460077
460008
547322
519545
519546 VITON
460007
460010
517849
703012
460087
460088
526976
DOCCETTA DOPPIA
DOUBLE SHOWER
460081
560300
560203
460080
460083
700739
700739/O MATT

PROFITEC

PRO 800

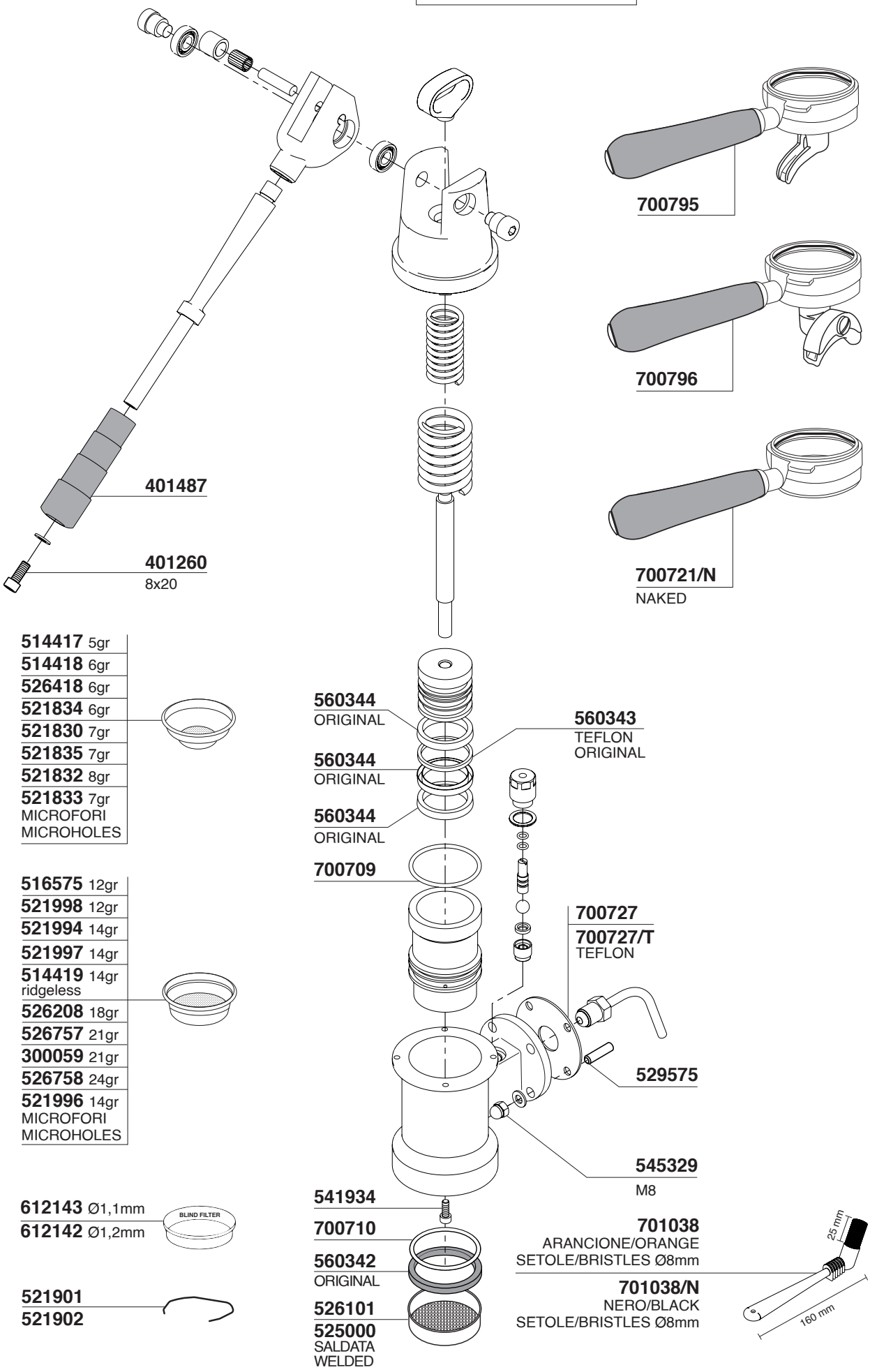

PRO 300

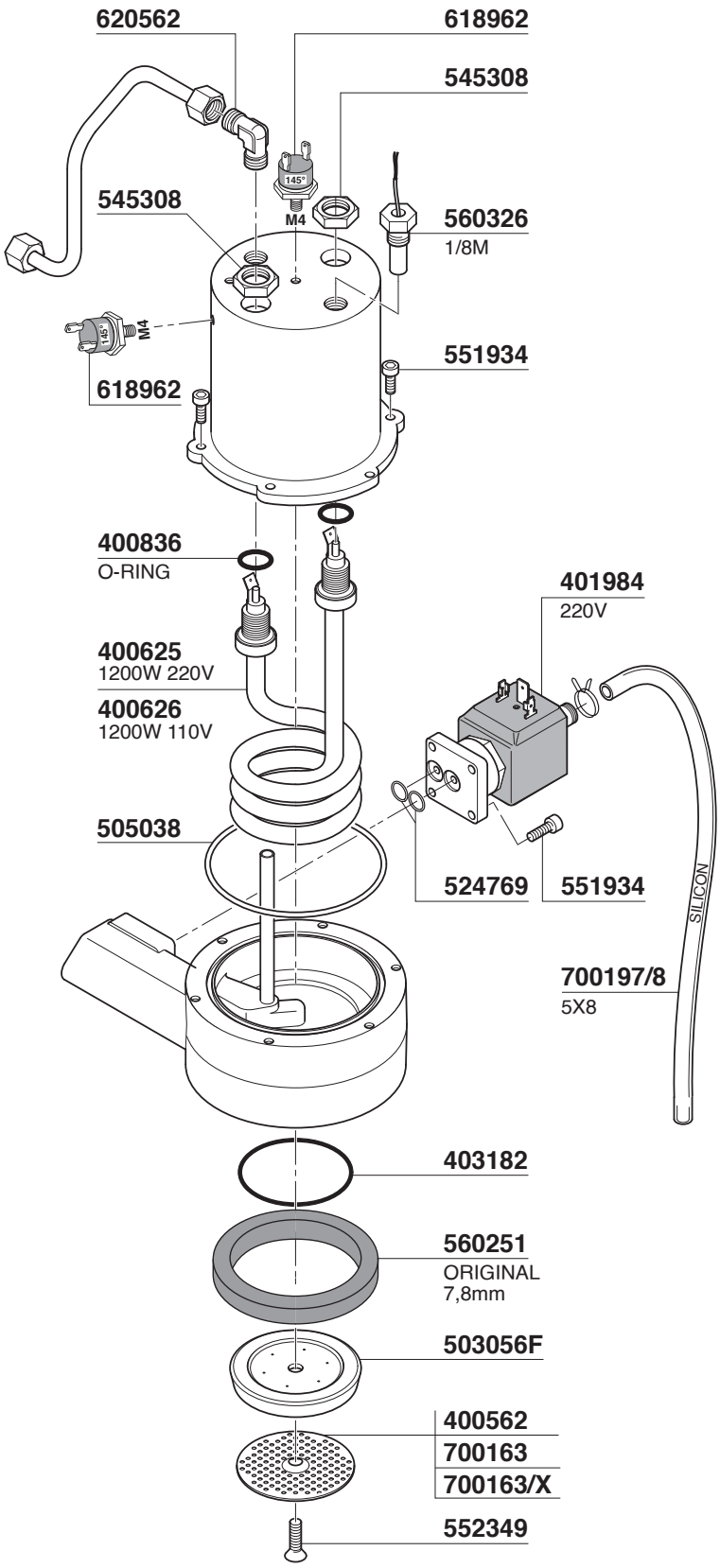
620562
618962
545308
145°
M4
545308
560326
1/8M
145°
M4
551934
618962
400836
O-RING
401984
220V
400625
1200W 220V
400626
1200W 110V
505038
524769
551934
SILICON
700197/8
5X8
403182
560251
ORIGINAL
7,8mm
503056F
400562
700163
700163/X
552349

PROFITEC

PRO 300 - PRO 500 - PRO 600 - PRO 700

514417 5gr
514418 6gr
526418 6gr
521834 6gr
521830 7gr
521835 7gr
521832 8gr
521833 7gr
MICROFORI
MICROHOLES

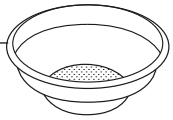

612143 Ø1,1 mm
612142 Ø1,2 mm

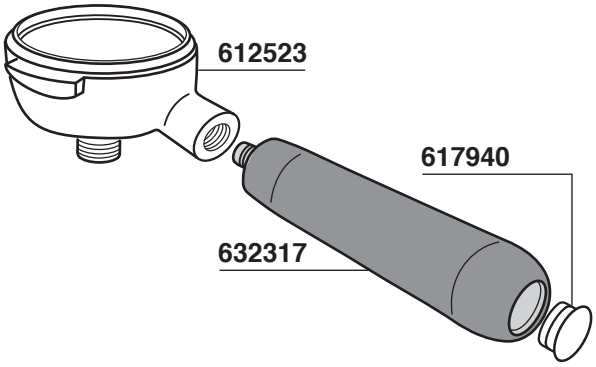

516575 12gr
521998 12gr
521994 14gr
521997 14gr
514419 14gr
ridgeless
526208 18gr
526757 21gr
300059 21gr
526758 24gr
521996 14gr
MICROFORI
MICROHOLES

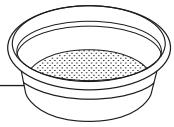

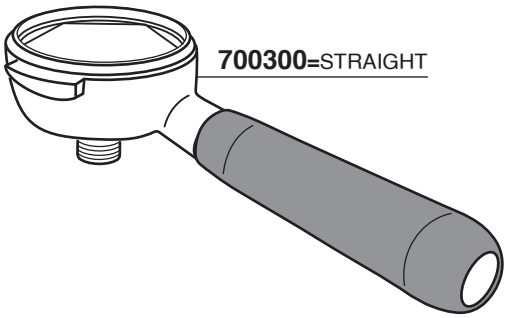

521901
521902

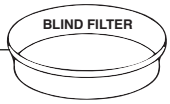

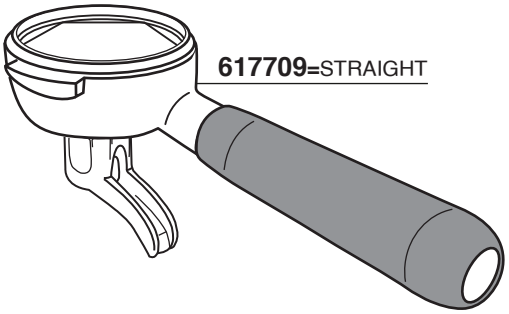

511675

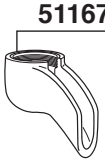

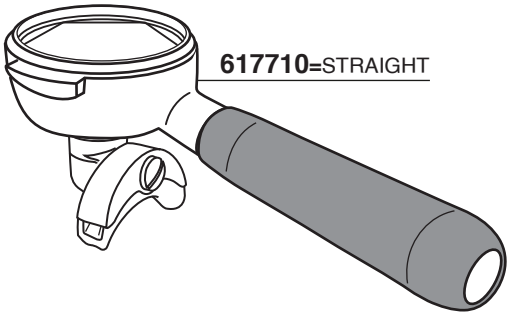

511674

PRO 500 - PRO 700 - PRO 800

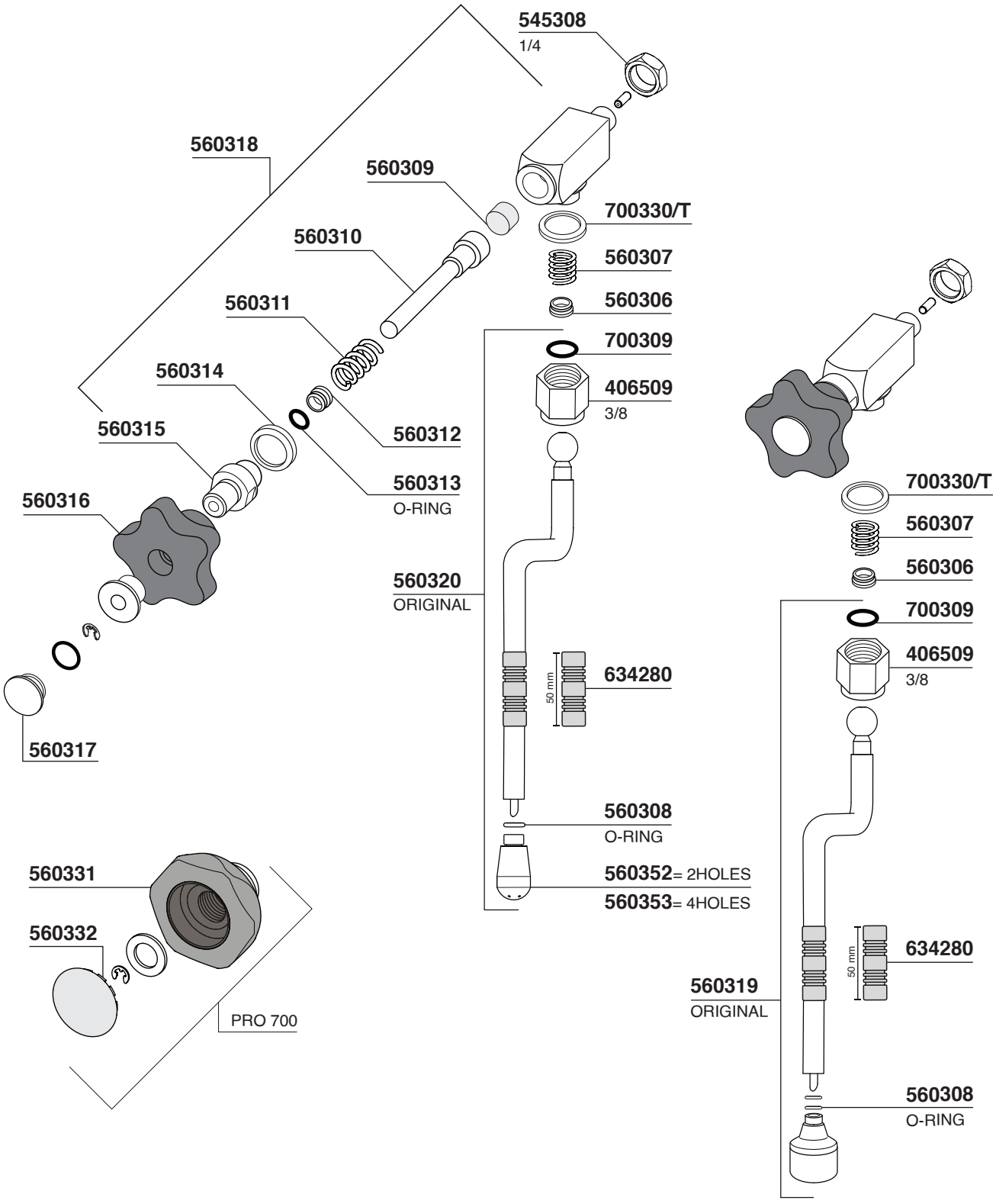

PROFITEC

Tav. 07

PRO 600

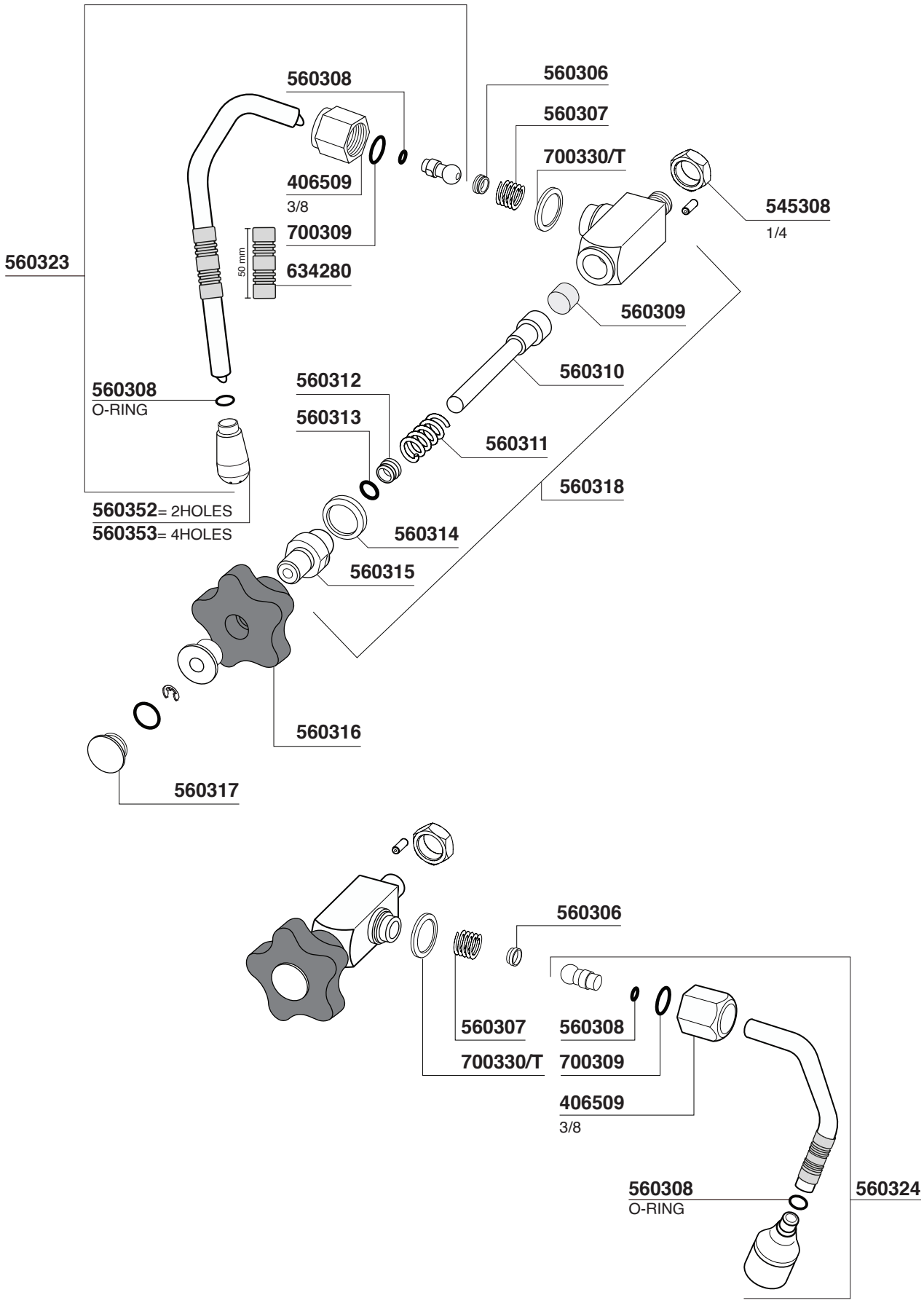

PRO 300

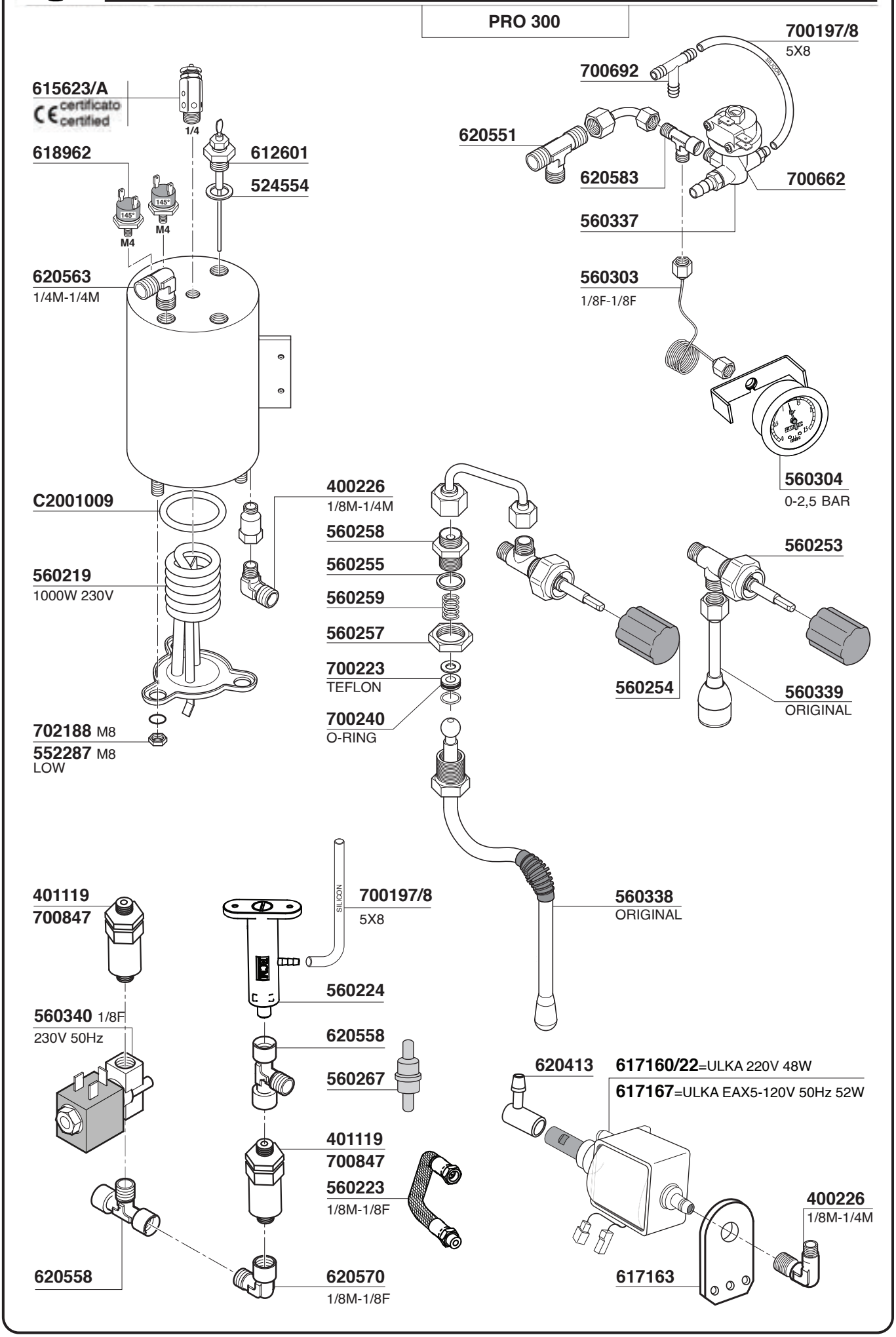
700197/8
5X8
700692
SILICON
615623/A
certificato
certified
1/4
620551
618962
612601
524554
620583
700662
145°
M4
560337
620563
1/4M-1/4M
560303
1/8F-1/8F
560304
0-2,5 BAR
400226
1/8M-1/4M
C2001009
560258
560255
560253
560219
1000W 230V
560259
560257
700223
TEFLON
560254
560339
ORIGINAL
700240
O-RING
702188 M8
552287 M8
LOW
560338
ORIGINAL
401119
700847
700197/8
5X8
560224
560340 1/8F
230V 50Hz
620558
560267
620413
617160/22=ULKA 220V 48W
617167=ULKA EAX5-120V 50Hz 52W
401119
700847
560223
1/8M-1/8F
400226
1/8M-1/4M
620558
620570
1/8M-1/8F
617163

PROFITEC

PRO 500

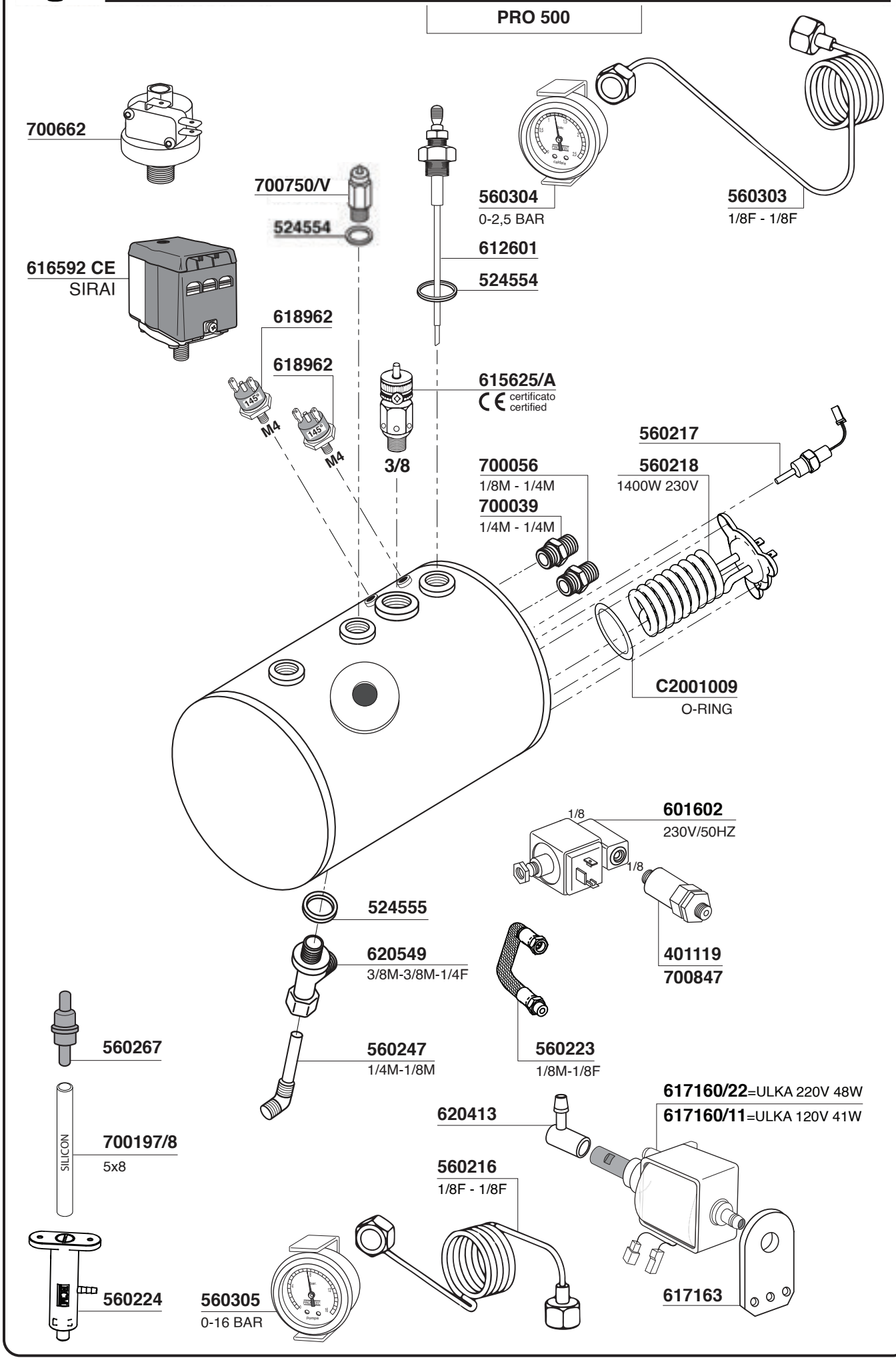

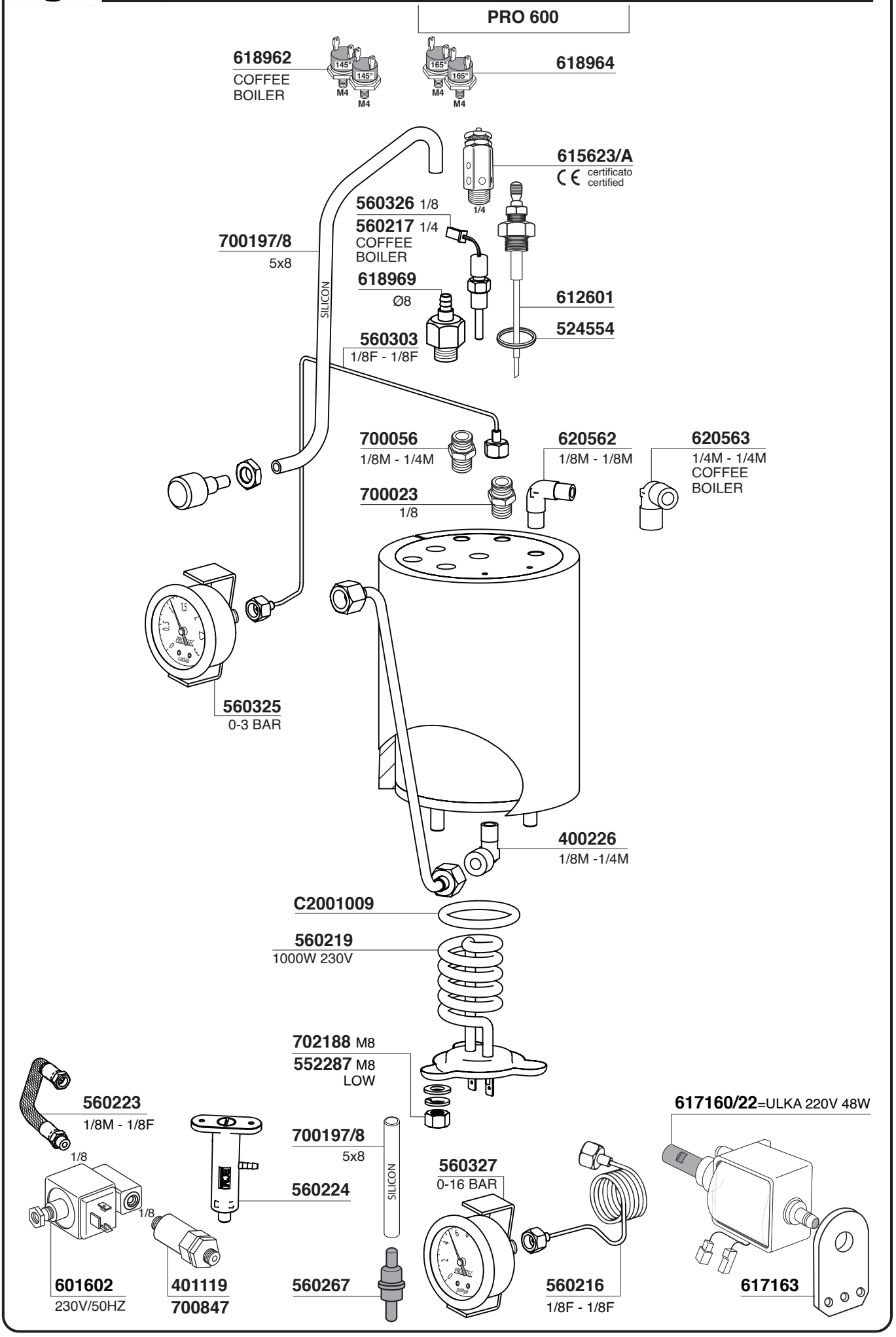
PRO 600
618962
COFFEE BOILER
145°
145°
M4
M4
165°
165°
M4
M4
618964
615623/A
certificato certified
1/4
560326 1/8
560217 1/4
COFFEE BOILER
700197/8
5x8
SILICON
618969
Ø8
612601
524554
560303
1/8F - 1/8F
700056
1/8M - 1/4M
620562
1/8M - 1/8M
620563
1/4M - 1/4M
COFFEE BOILER
700023
1/8
560325
0-3 BAR
400226
1/8M -1/4M
C2001009
560219
1000W 230V
702188 M8
552287 M8
LOW
560223
1/8M - 1/8F
1/8
700197/8
5x8
SILICON
560224
1/8
601602
230V/50HZ
401119
700847
560267
560327
0-16 BAR
560216
1/8F - 1/8F
617160/22=ULKA 220V 48W
617163

PROFITEC

Tav. 11

PRO 700

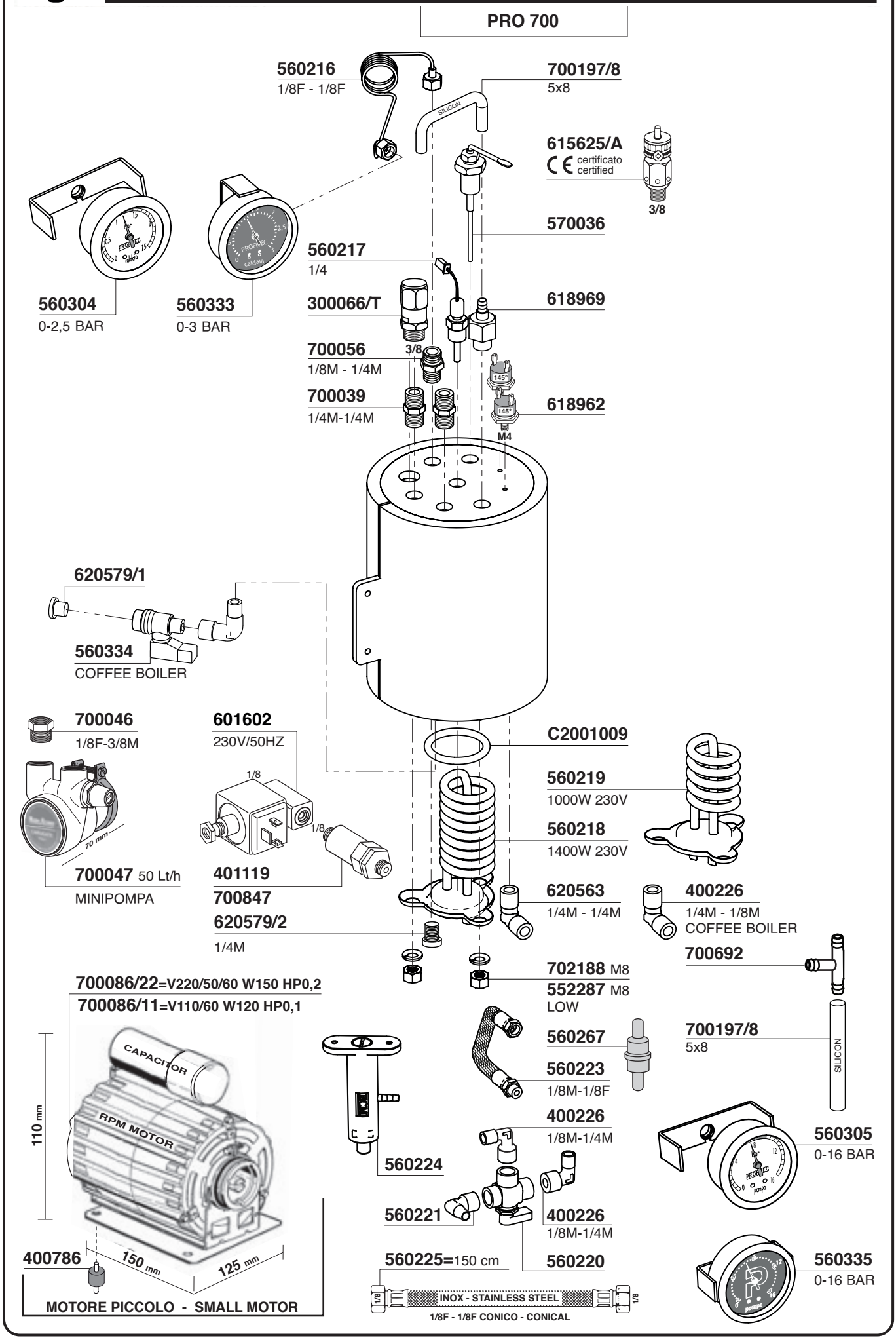

PRO 800

615625/A
CE certificato certified

570036

700750/V

560217
1/4

3/8

401260

620563
1/4M 1/4M

503003
8X20

400819
400819/T=TEFLON

700056
1/8M-1/4M

560216

618962

560348=1600W 220V
400614=1800W 220V
400620=1800W 110V

620563
1/4M - 1/4M

700039
1/4M - 1/4M

560304
0-2,5 BAR

400226
1/8M-1/4M

560349
230V/50Hz

700197/8
5X8

560223
1/8M-1/8F

1/8

SILICON

1/8

401119
700847

400226
1/8M-1/4M

617163

560220

620562
1/8M-1/8M

400226
1/8M-1/4M

617160/22
ULKA 220V 48W

617167
ULKA 120V 52W

617163

560225=150 cm

1/8 INOX - STAINLESS STEEL 1/8

1/8F - 1/8F CONICO - CONICAL

700056
1/4M-1/8M

PROFITEC

PRO 300 - PRO 500 - PRO 600
PRO 700 - PRO 800

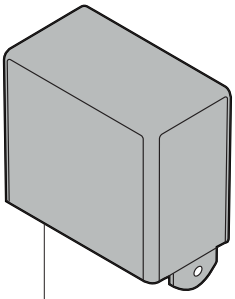

560226= 220V-240V
PRO 600 - PRO 700

560227= 115V
PRO 600 - PRO 700

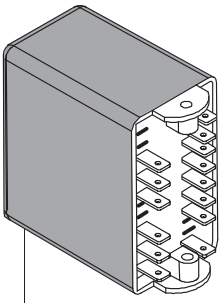

560228= 240V
GICAR CODE 9.9.36.12G
PRO 300 - PRO 500 - PRO 600 - PRO 700

560229= 115V
GICAR CODE 9.9.36.04G
PRO 300 - PRO 500 - PRO 600 - PRO 700

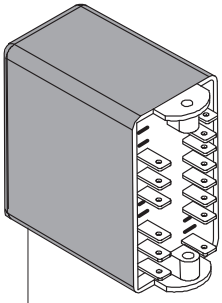

560350= 220V-240V
PRO 800

560351= 115V
PRO 800

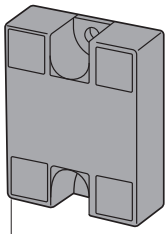

560230
PRO 300 - PRO 700 - PRO 800

560321
PRO 500 - PRO 600

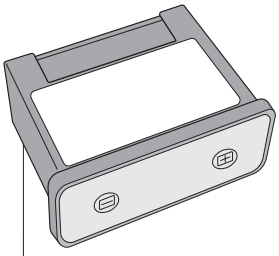

560341
PRO 300 - PRO 800

560322
PRO 500

560328
PRO 600 - PRO 700 UNTIL 09.2018

560336
PRO 700 SINCE 09.2018

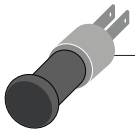

560262 220V
ORANGE
PRO 300

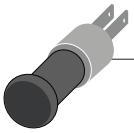

560263 220V
GREEN
PRO 300

VERDE
GREEN

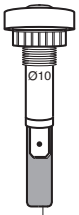

617733 220V
PRO 500 - PRO 600
PRO 700 - PRO 800

ROSSO
RED

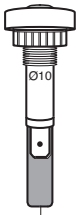

617734 220V
PRO 500 - PRO 700
PRO 800

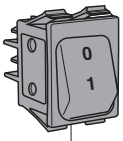

560232
PRO 700 - PRO 800

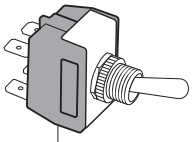

560231
PRO 300 - PRO 500
PRO 600 - PRO 700 - PRO 800

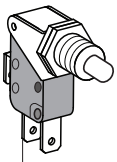

621271
PRO 500 - PRO 600
PRO 700

PROMAC

Tav.01

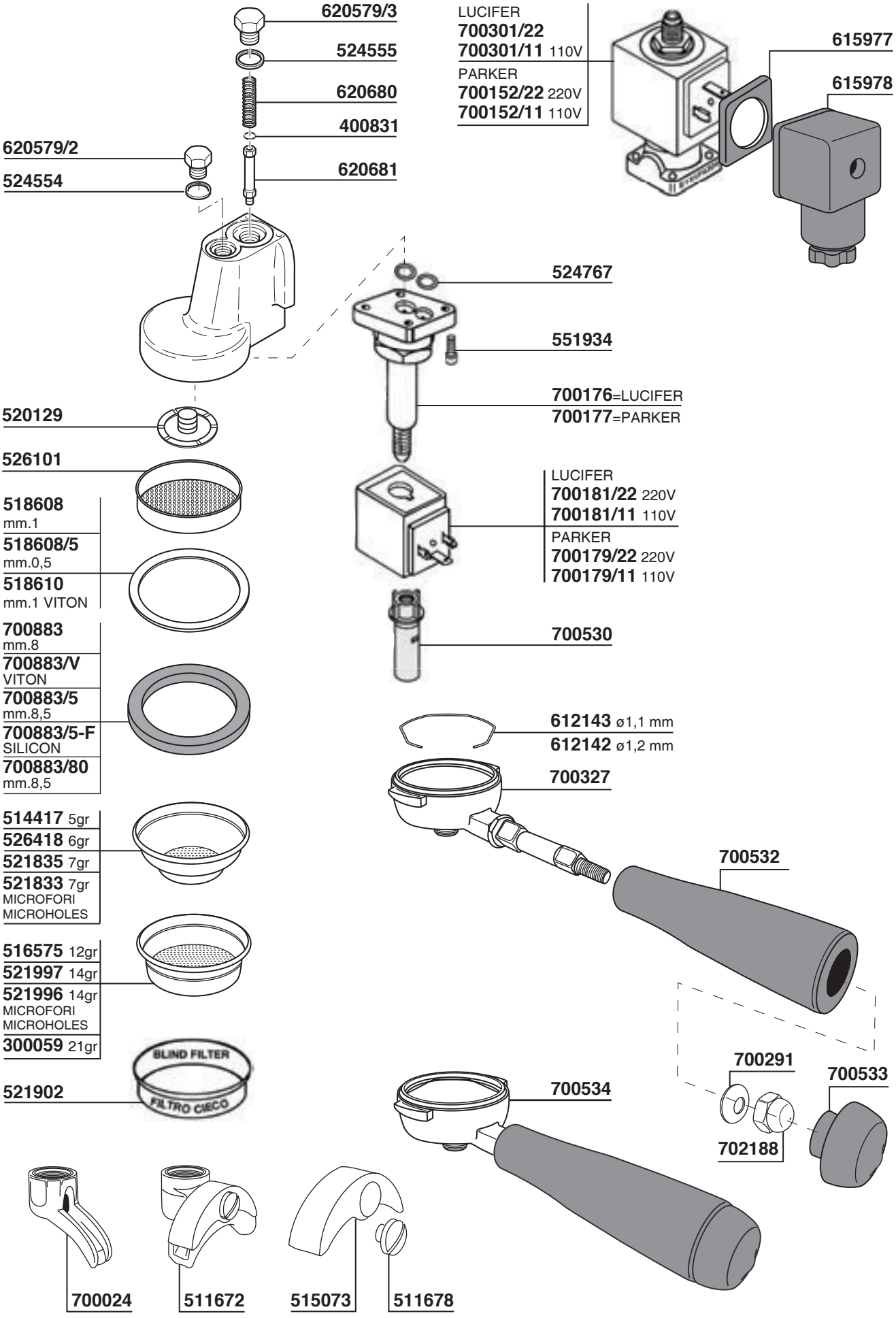

PROMAC

Tav. 02

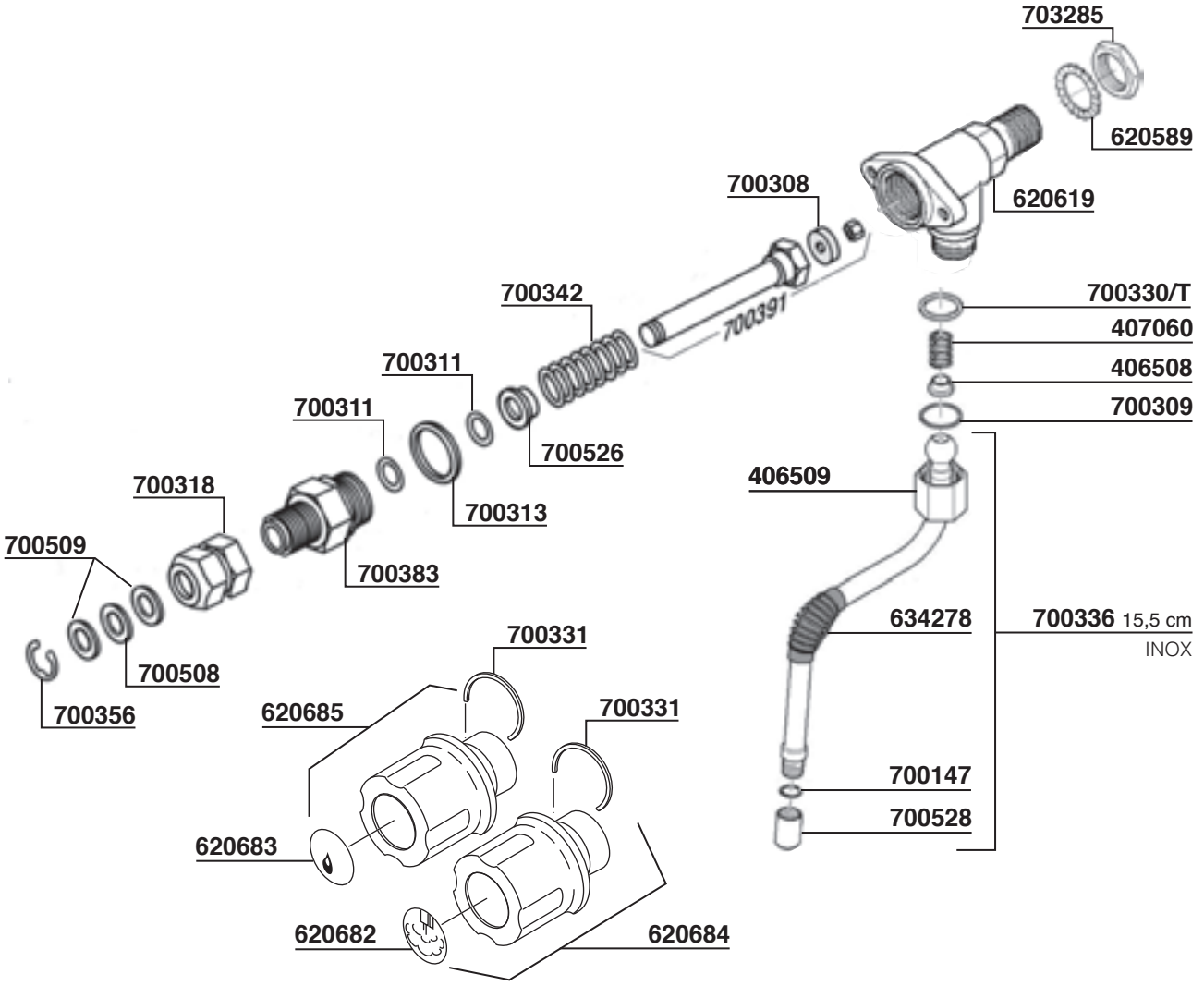

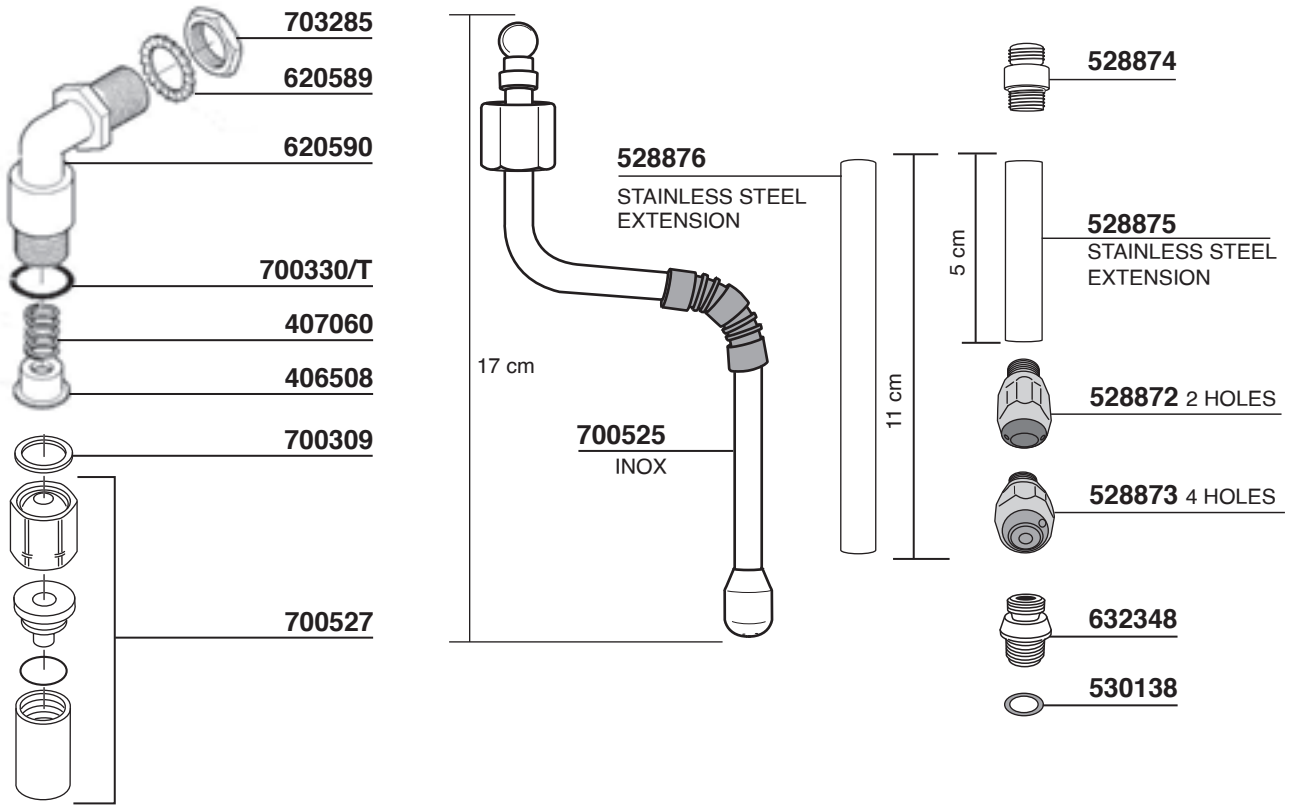

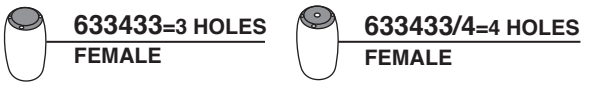

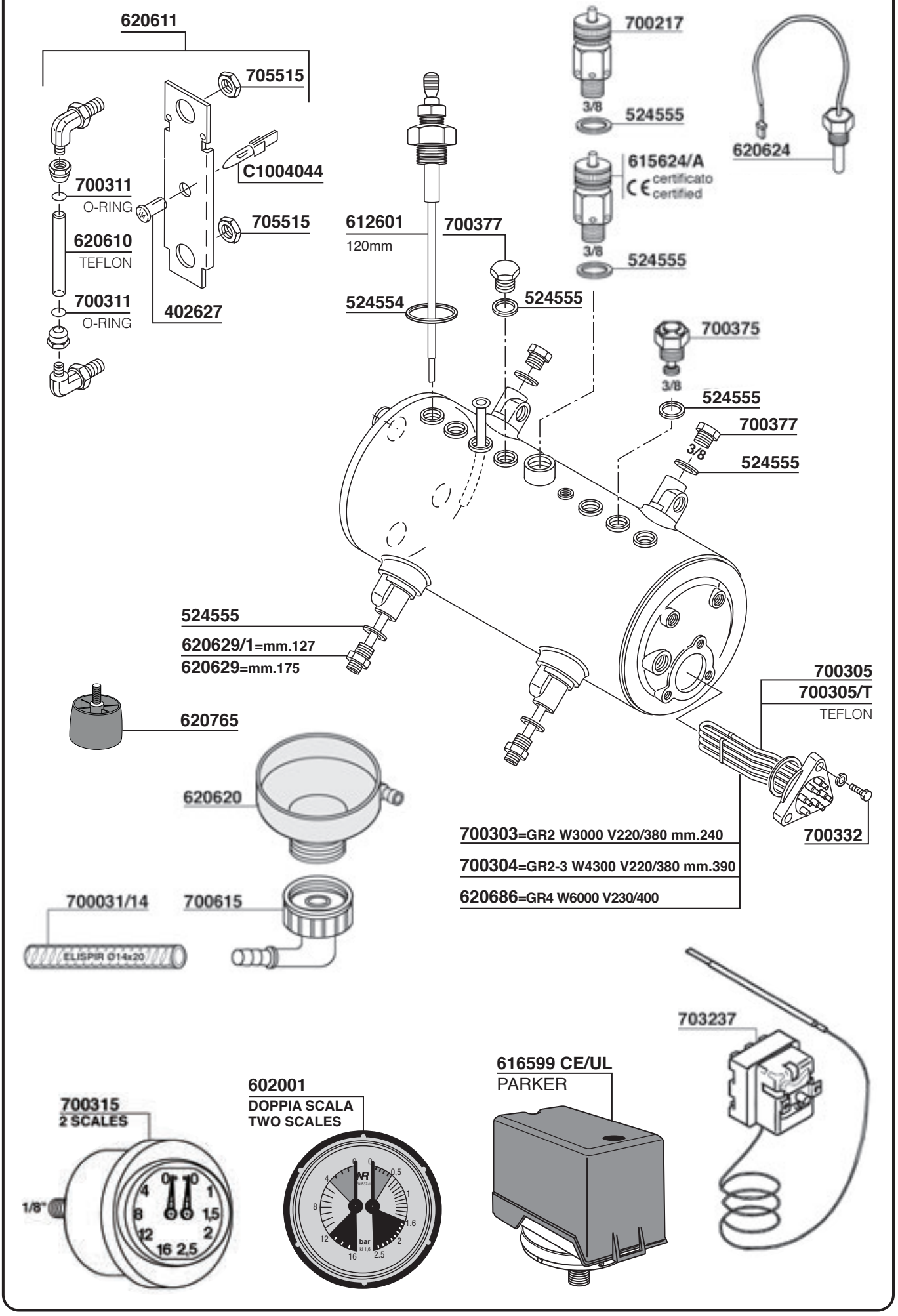
620611
705515
C1004044
700311
O-RING
620610
TEFLON
700311
O-RING
402627
705515
612601
120mm
524554
700377
524555
700217
3/8
524555
615624/A
certificato
certified
3/8
524555
620624
700375
3/8
524555
700377
3/8
524555
524555
620629/1=mm.127
620629=mm.175
620765
620620
700305
700305/T
TEFLON
700332
700303=GR2 W3000 V220/380 mm.240
700304=GR2-3 W4300 V220/380 mm.390
620686=GR4 W6000 V230/400
700031/14
ELISPIR Ø14x20
700615
703237
616599 CE/UL
PARKER
602001
DOPPIA SCALA
TWO SCALES
700315
2 SCALES
1/8"

PROMAC

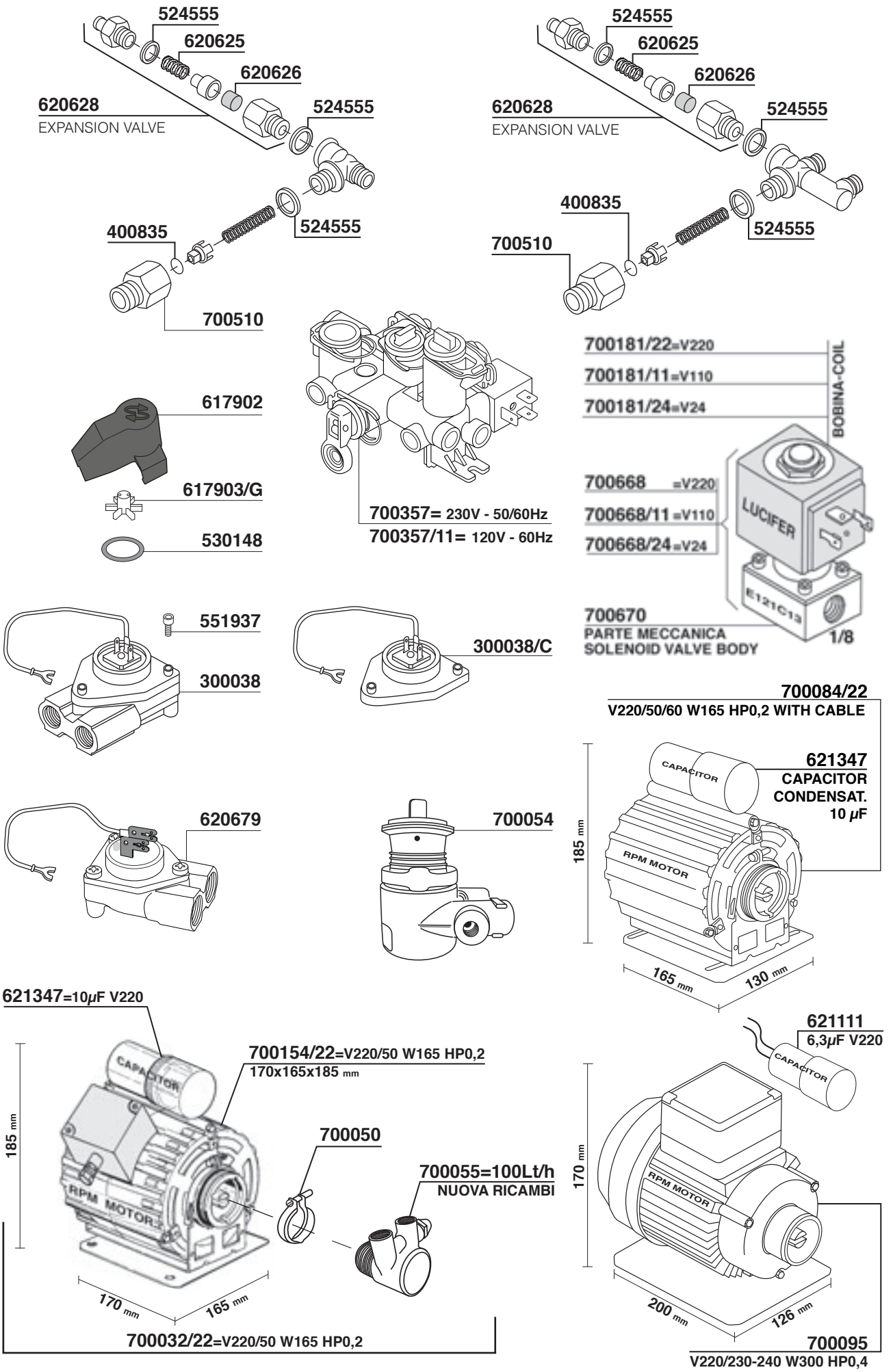
524555
620625
620626
620628
EXPANSION VALVE
524555
400835
524555
700510
524555
620625
620626
620628
EXPANSION VALVE
524555
400835
524555
700510
617902
617903/G
530148
700357= 230V - 50/60Hz
700357/11= 120V - 60Hz
700181/22=V220
700181/11=V110
700181/24=V24
BOBINA-COIL
700668 =V220
700668/11 =V110
700668/24=V24
LUCIFER
E121C13
700670
PARTE MECCANICA
SOLENOID VALVE BODY
1/8
551937
300038
300038/C
700084/22
V220/50/60 W165 HP0,2 WITH CABLE
621347
CAPACITOR
CONDENSAT.
10 µF
CAPACITOR
RPM MOTOR
185 mm
165 mm
130 mm
620679
700054
621347=10µF V220
CAPACITOR
700154/22=V220/50 W165 HP0,2
170x165x185 mm
185 mm
RPM MOTOR
700050
700055=100Lt/h
NUOVA RICAMBI
170 mm
165 mm
700032/22=V220/50 W165 HP0,2
621111
6,3µF V220
CAPACITOR
170 mm
RPM MOTOR
200 mm
126 mm
700095
V220/230-240 W300 HP0,4

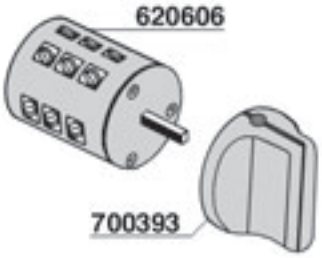

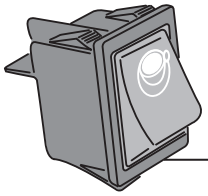

620687

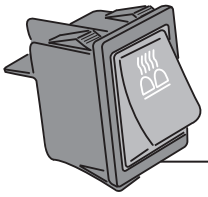

620688

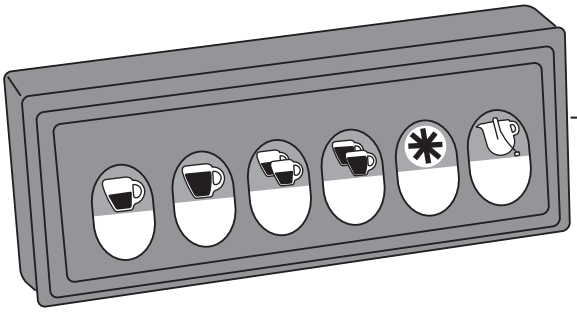

620689
GICAR CODE 9.9.08.91.G

620690
GICAR CODE 9.5.13.59.G

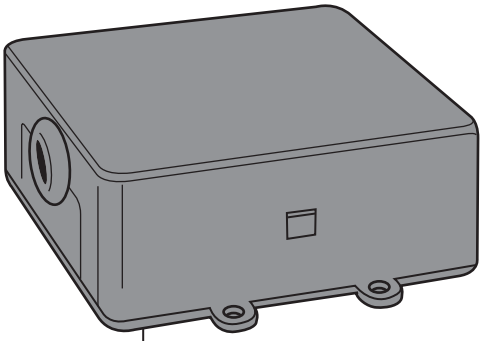

620691 GR1/2/3 230V
GICAR CODE 9.5.25.49.G

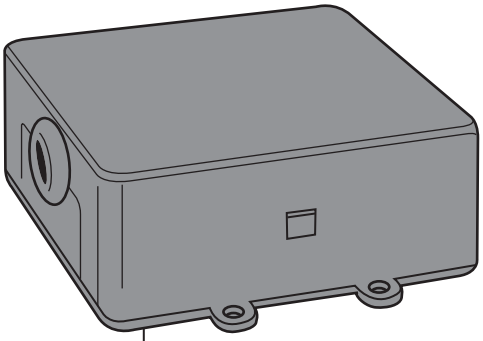

620693 GR2/3 230V PROMAC PLUS
GICAR CODE 9.5.25.29.G

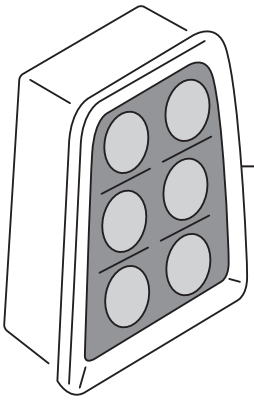

620694
GICAR CODE 9.9.18.36.G

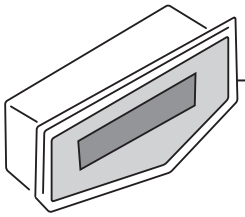

620695
GICAR CODE 9.5.31.67.G

RANCILIO

Tav.01

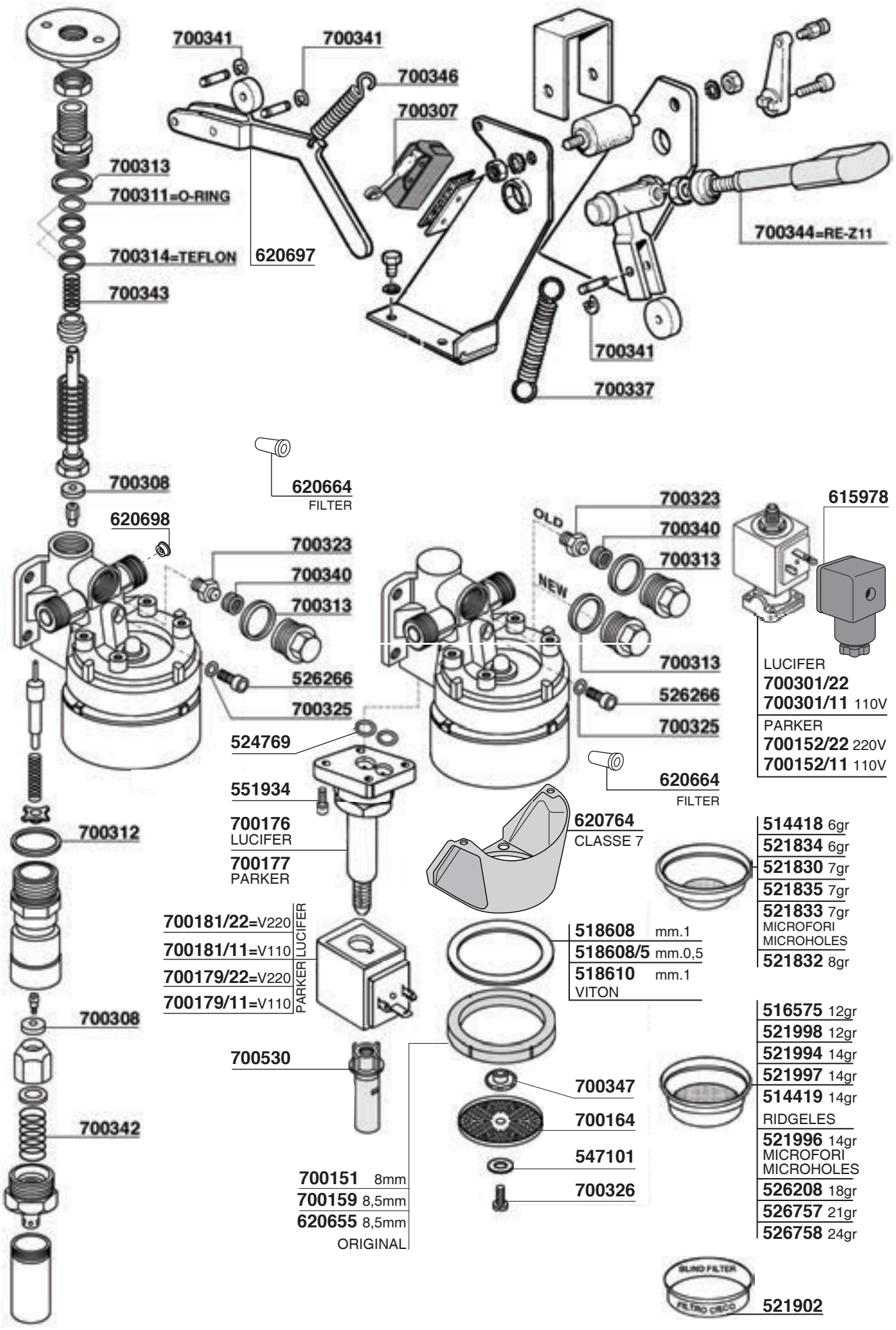

RANCILIO

Tav. 02

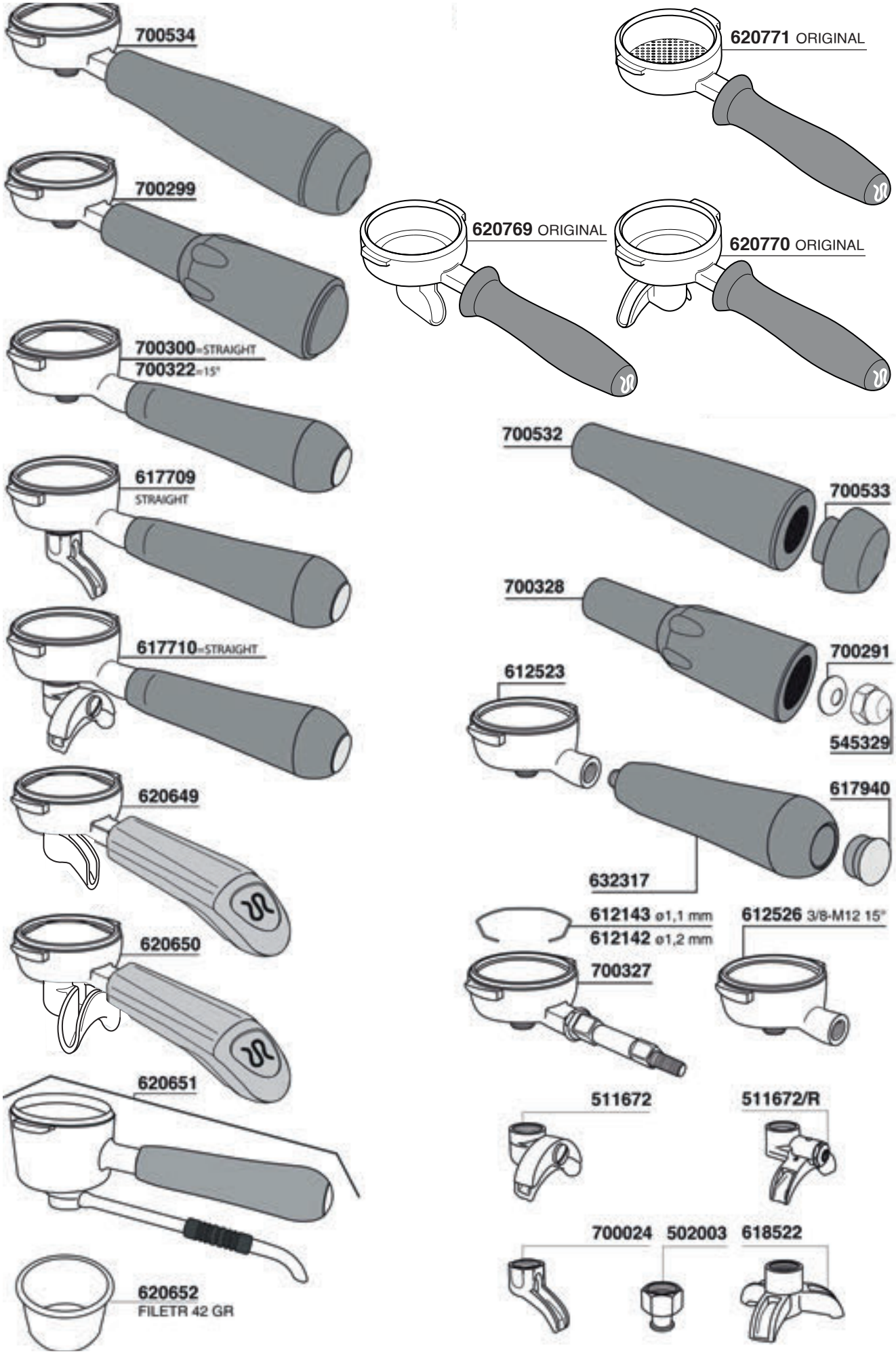

RANCILIO

Tav. 03

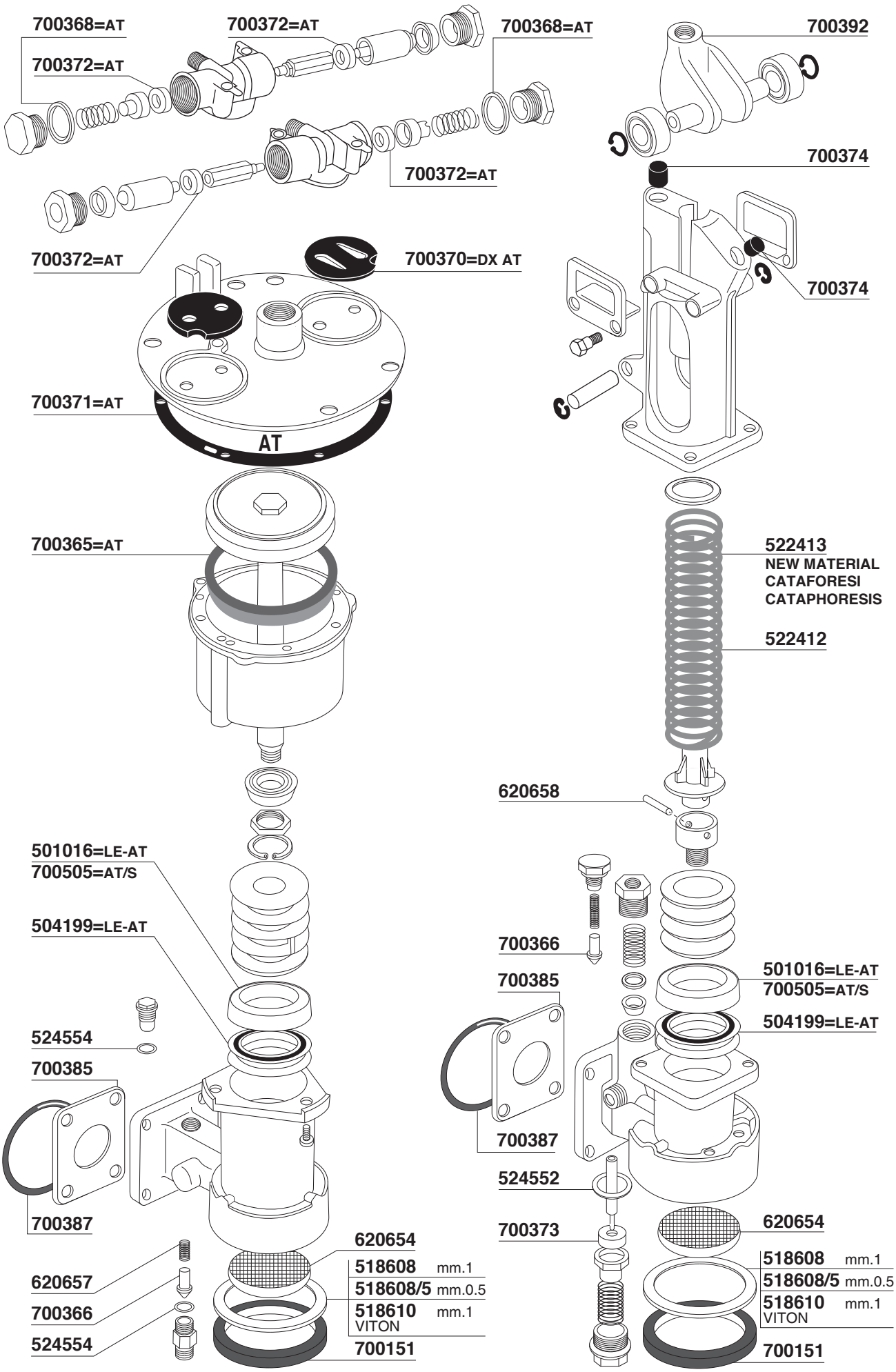

RANCILIO

Tav.04

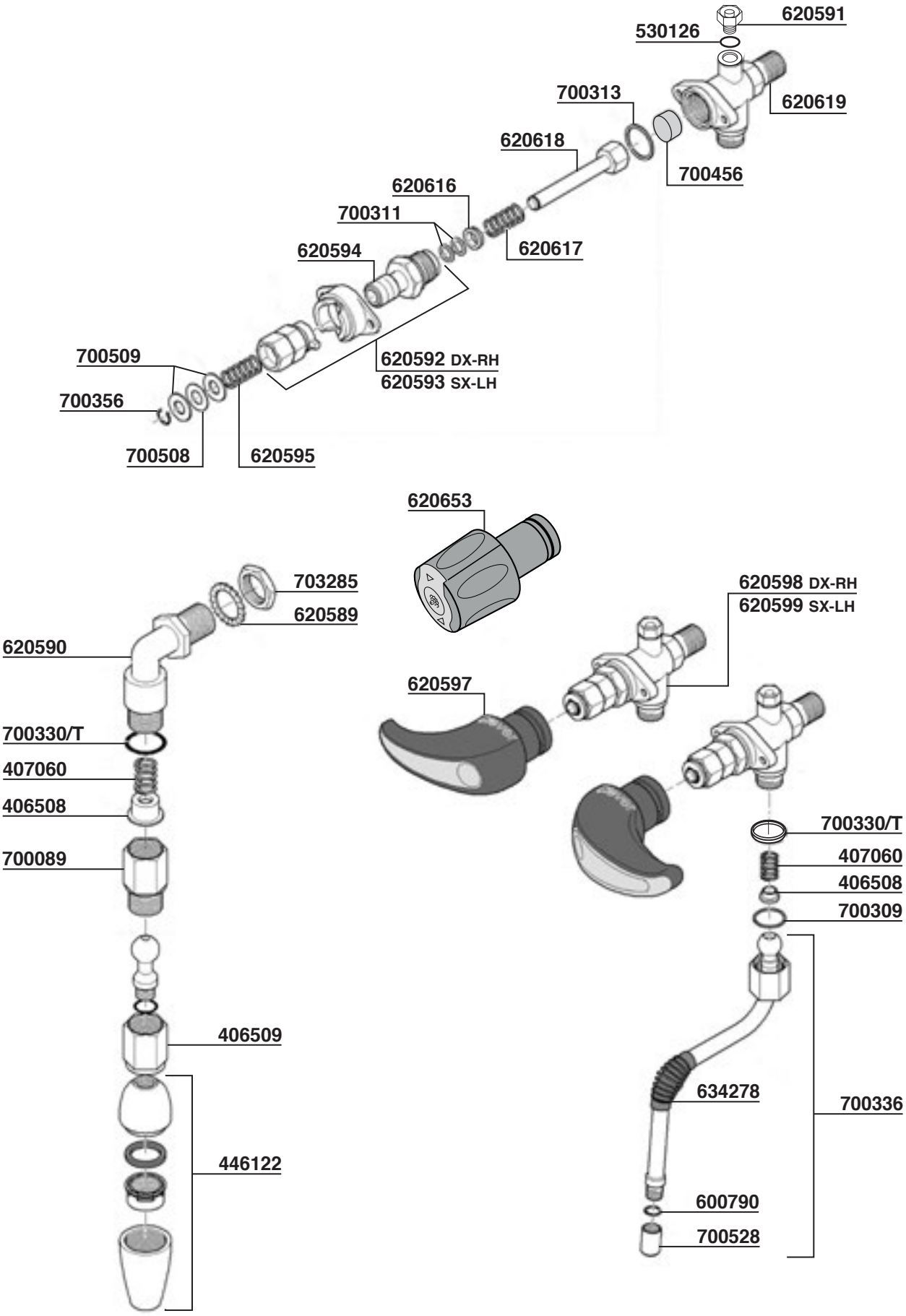

RANCILIO

Tav. 05

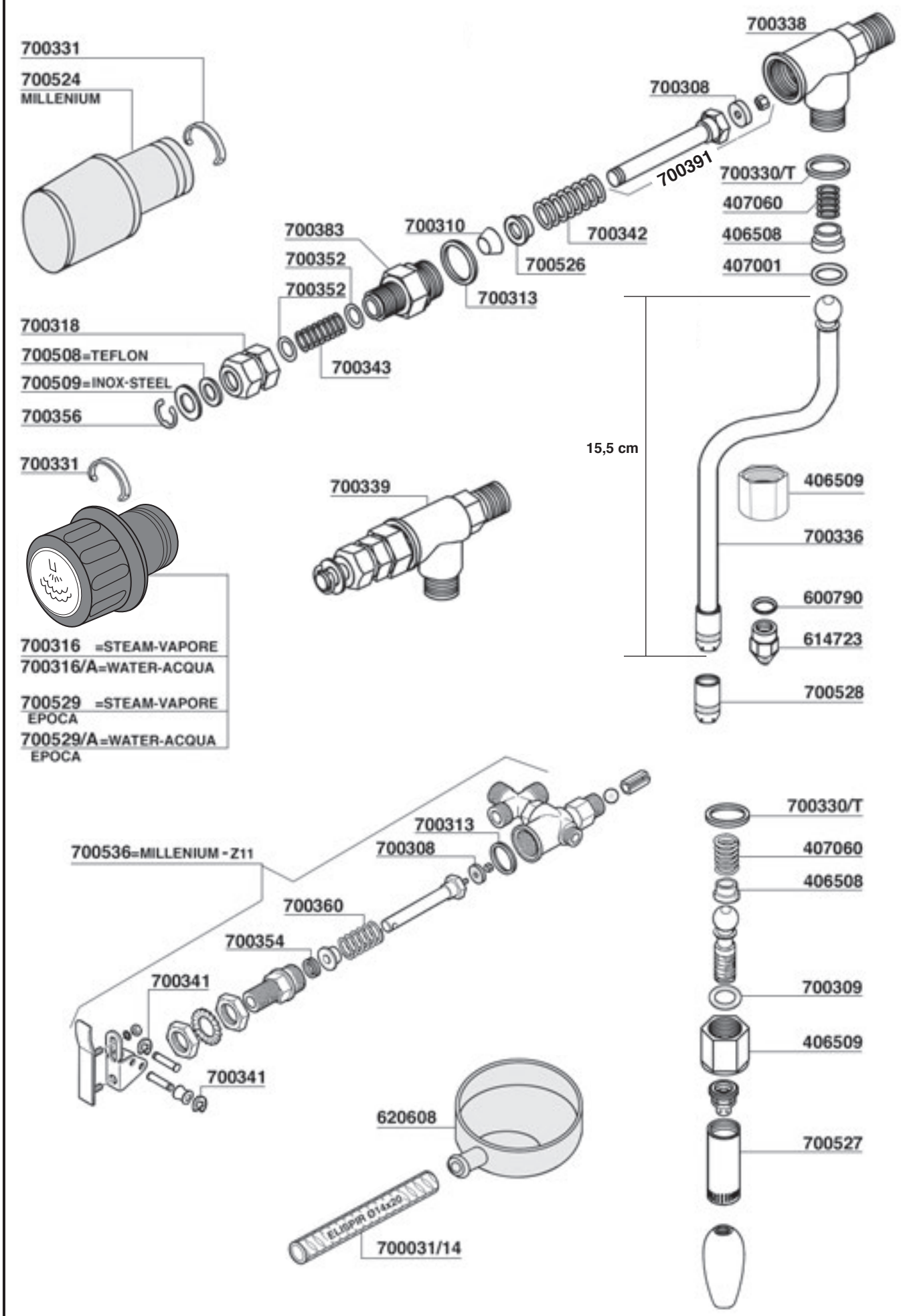

RANCILIO

Tav.06

CLASSE 10

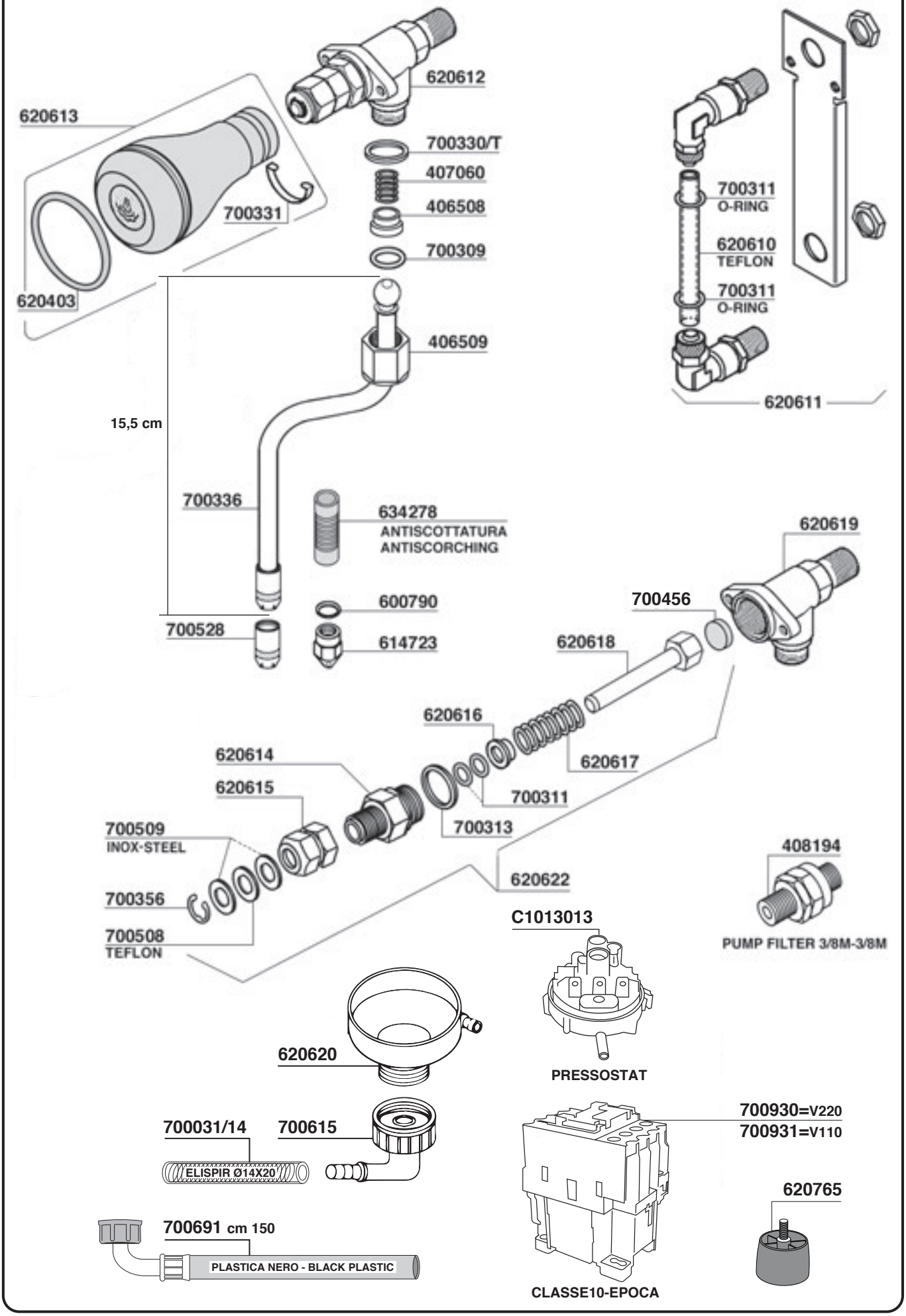

RANCILIO

Tav. 07

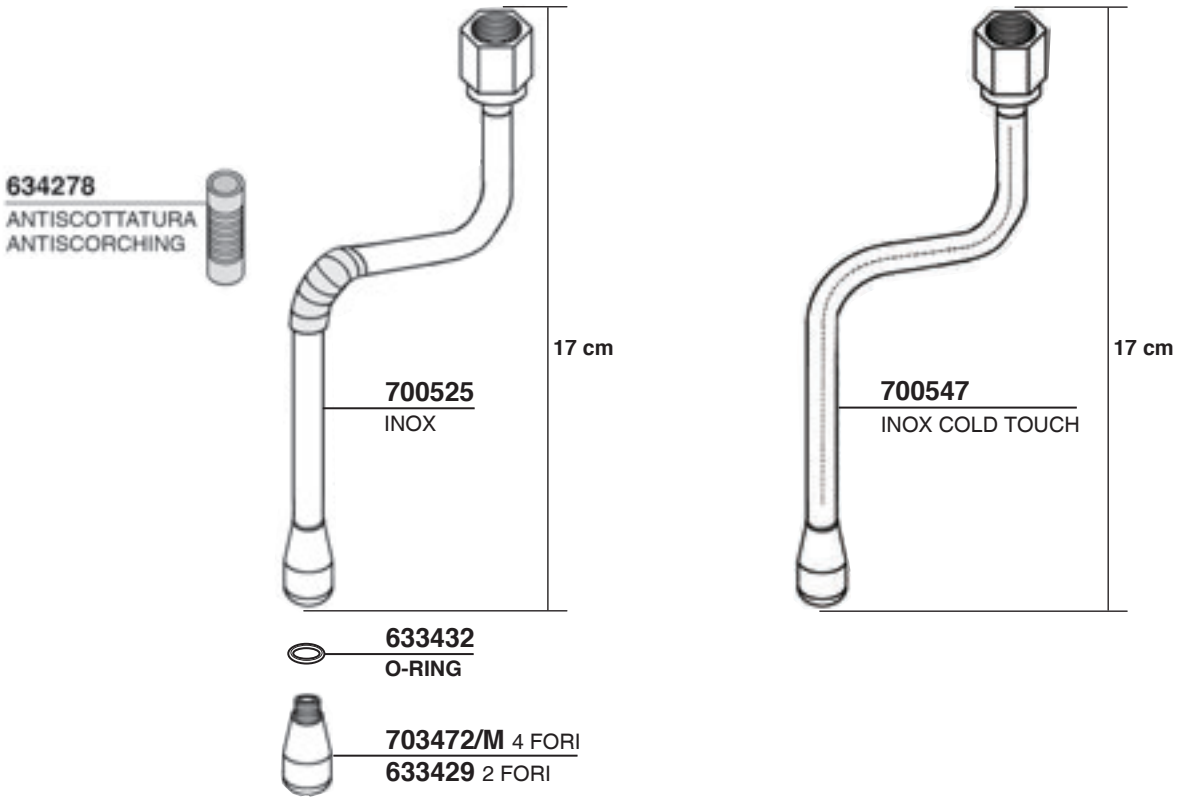

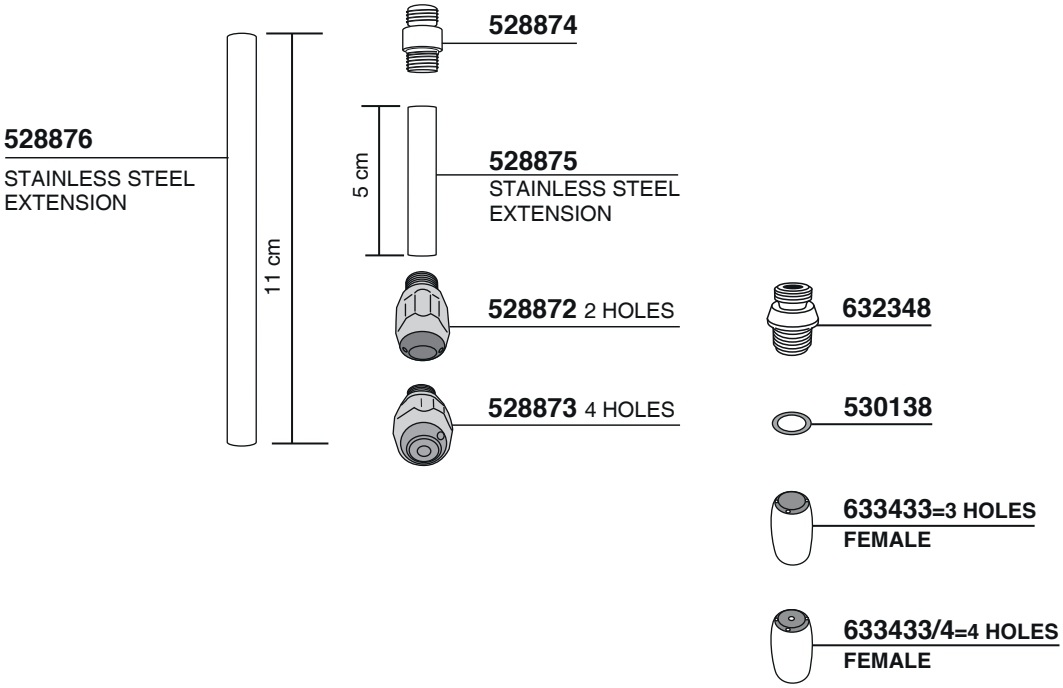

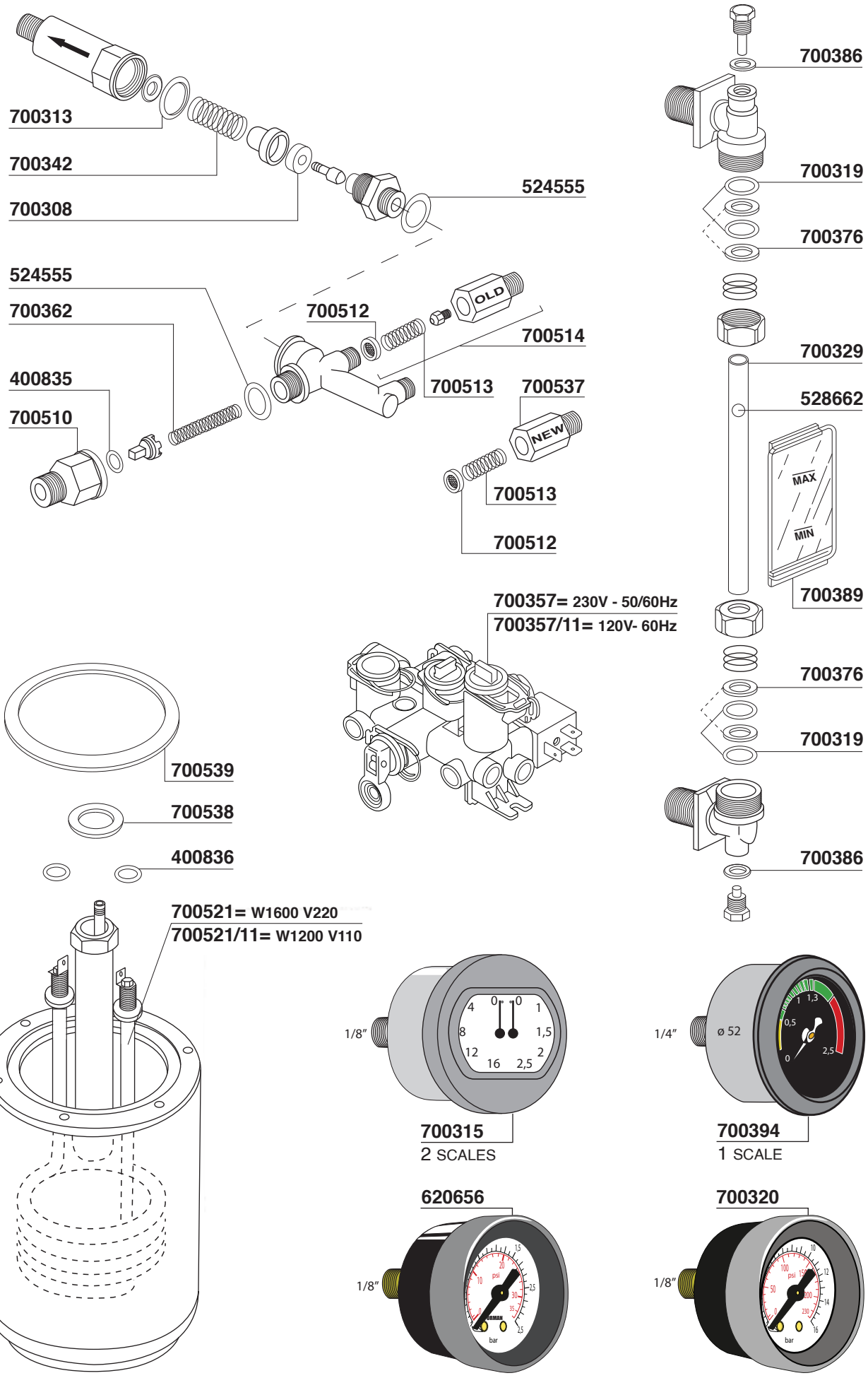
700313
700342
700308
524555
524555
700362
400835
700510
700512
OLD
700514
700513
700537
NEW
700513
700512
700386
700319
700376
700329
528662
MAX
MIN
700389
700376
700319
700386
700357= 230V - 50/60Hz
700357/11= 120V- 60Hz
700539
700538
400836
700521= W1600 V220
700521/11= W1200 V110
1/8"
700315
2 SCALES
1/4"
ø 52
700394
1 SCALE
620656
1/8"
700320
1/8"

RANCILIO

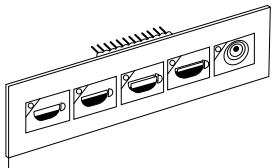

700398/S
Z11 OMICRON-TECNA-S20

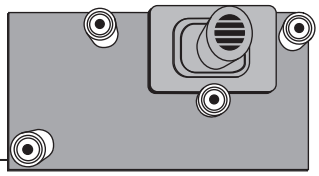

620600/N

620602
EPOCA DE

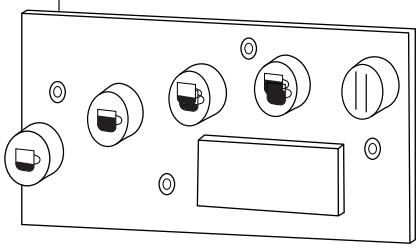

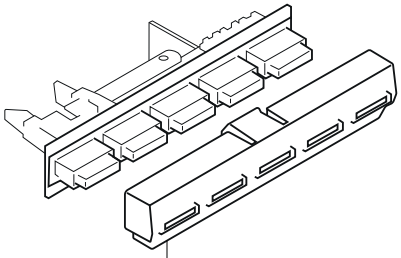

620648

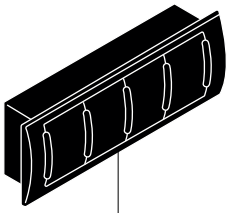

620761
CLASSE 7 - CLASSE 9

620699

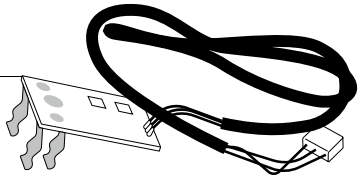

620692
230V

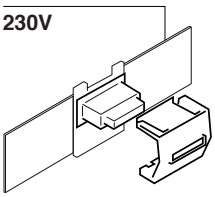

620762
CLASSE 7 USB/16

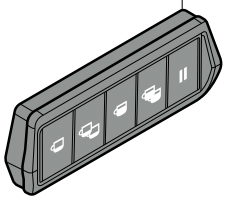

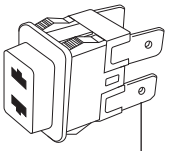

SWITCH 620609

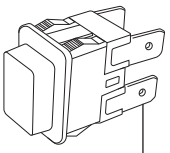

ORANGE V230 = 620630
2 POLE LUMINOUS SWITCH

620604= WATER SWITCH MLN/CDX

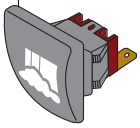

620763
CLASSE 7/16

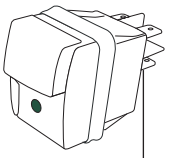

620632
INTERRUTTORE BIP.VERDE
EPOCA

620606

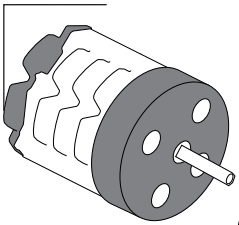

700393

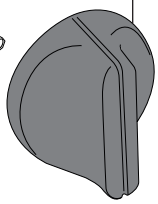

700381

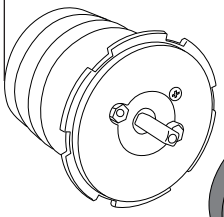

700393

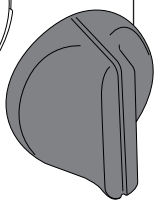

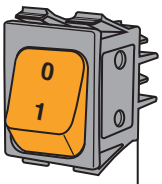

ORANGE 700382

RANCILIO

Tav. 10

700181/22=V220
700181/11=V110
700181/24=V24
BOBINA-COIL

700668 =V220
700668/11 =V110
700668/24 =V24

700670
PARTE MECCANICA
SOLENOID VALVE BODY

1/8

1/8

700253/22=V220
700253/11=V110

615978/P

617902

617903/G

530148

620679

524769

551934

PARKER
634294/22=V220
634294/11=V110

300038/C

551937

300038

621347
CAPACITOR
CONDENSAT.
10 μF

700054

700737 =V220
700737/11=V110

185 mm
165 mm
130 mm

700084/22
V220/50/60 W165 HP0,2 WITH CABLE

621347=10μF V220

700154/22=V220/50 W165 HP0,2
170x165x185 mm

700095
V220/230-240 W300 HP0,4

621111
6,3μF V220

700050

700055=100Lt/h
NUOVA RICAMBI

185 mm
170 mm
165 mm

170 mm
200 mm
126 mm

700032/22=V220/50 W165 HP0,2

RANCILIO

Tav. 11

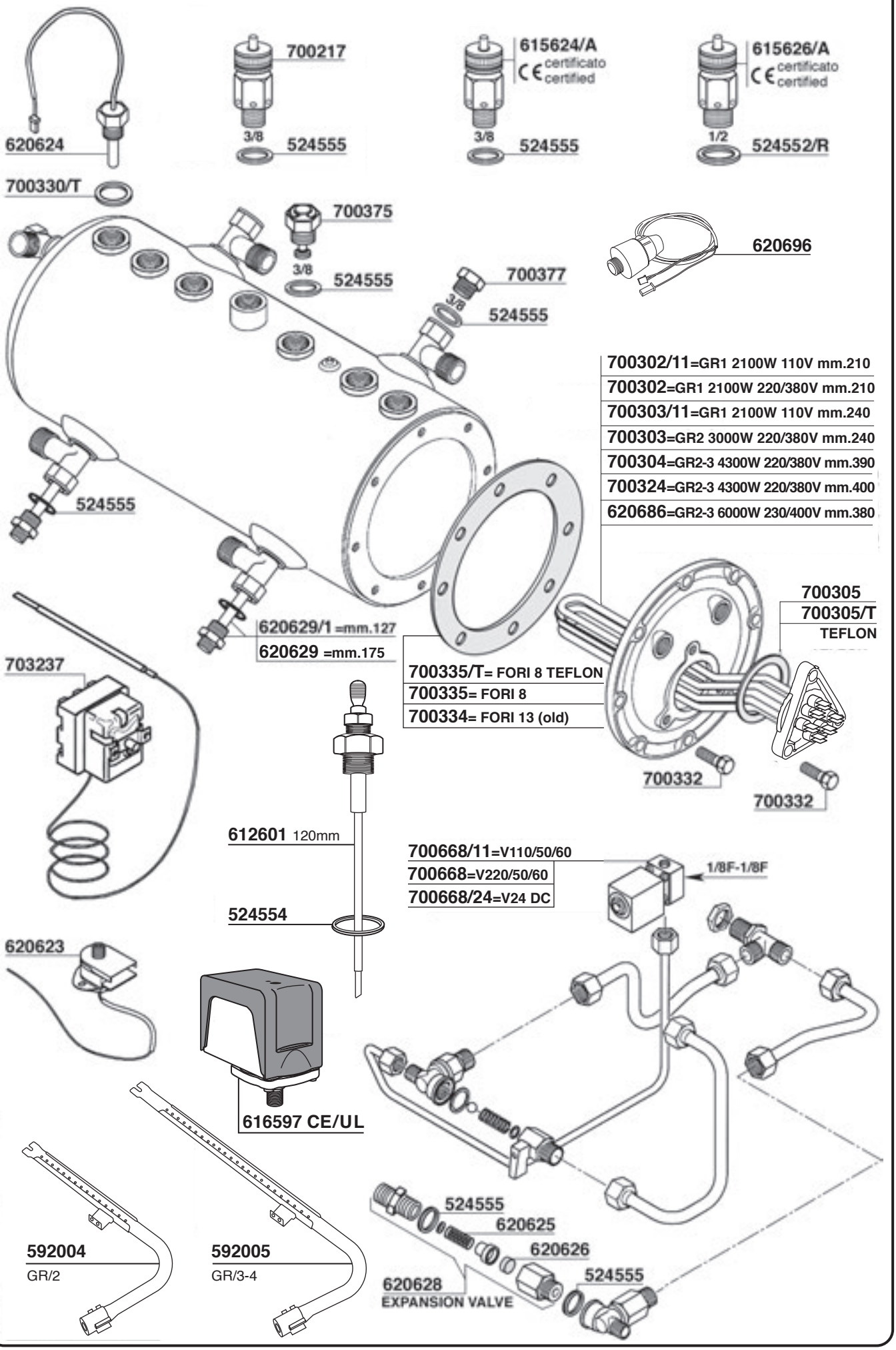

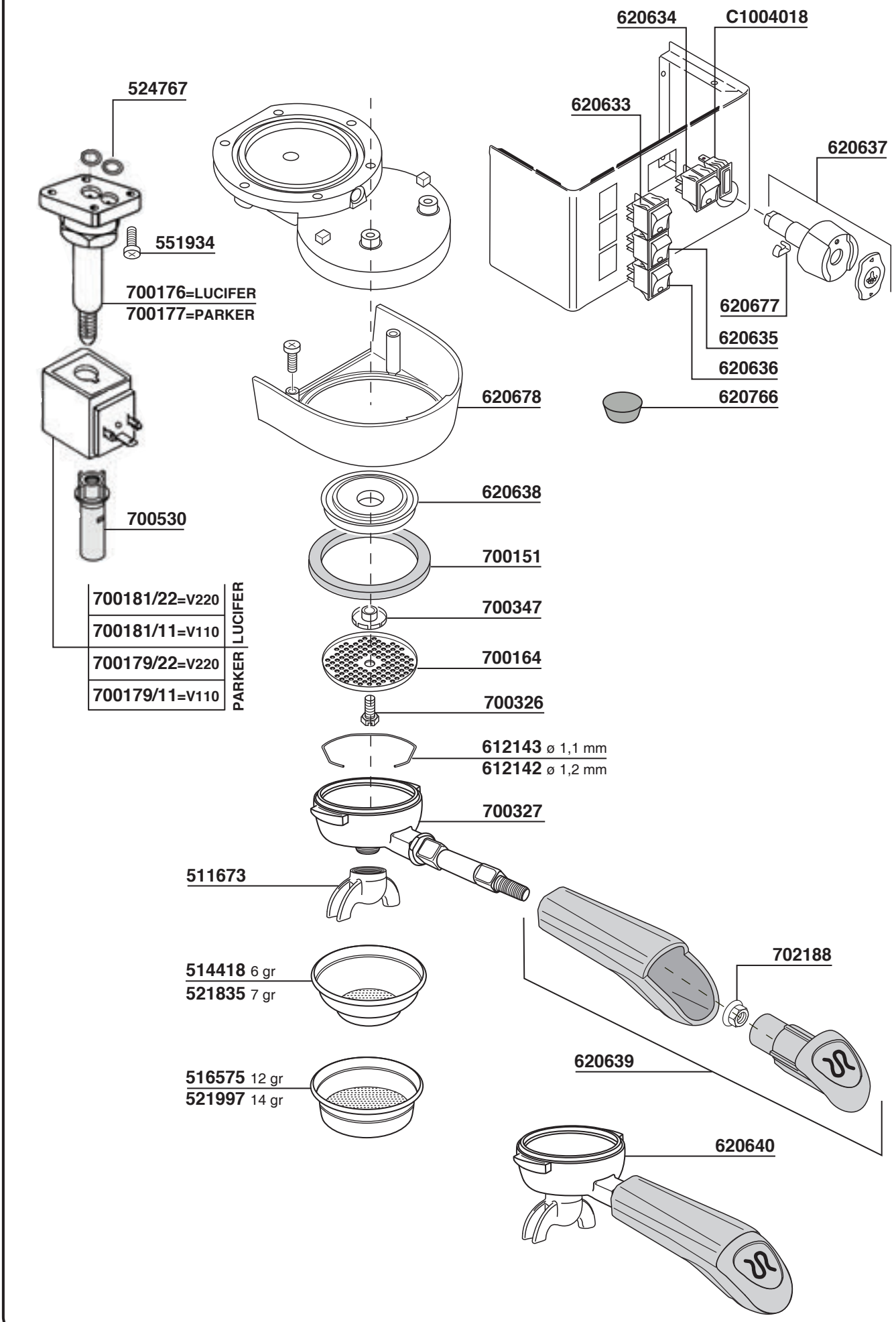
620634
C1004018
620633
620637
524767
551934
700176=LUCIFER
700177=PARKER
620677
620635
620636
620678
620766
620638
700530
700151
700181/22=V220
700181/11=V110
LUCIFER
700347
700179/22=V220
700179/11=V110
PARKER
700164
700326
612143 ø 1,1 mm
612142 ø 1,2 mm
700327
511673
702188
514418 6 gr
521835 7 gr
620639
516575 12 gr
521997 14 gr
620640

RANCILIO

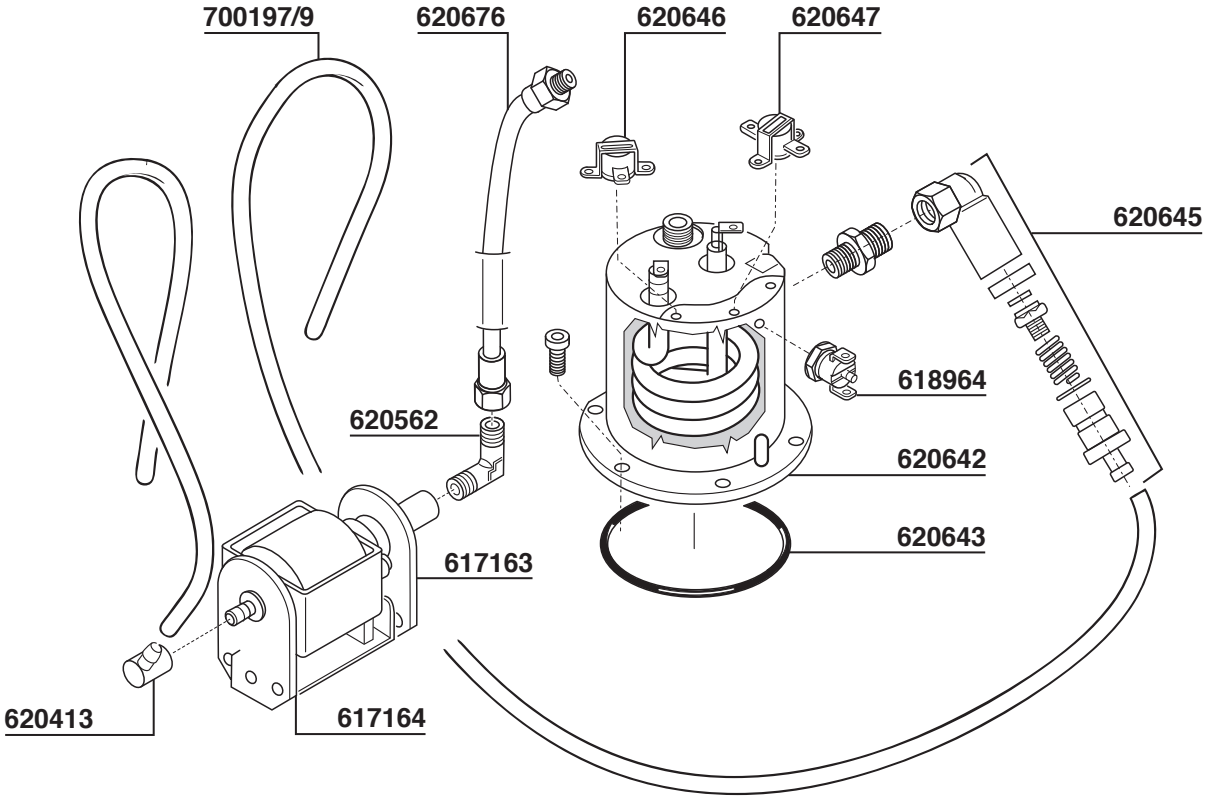
700197/9
620676
620646
620647
620645
618964
620562
620642
620643
617163
620413
617164

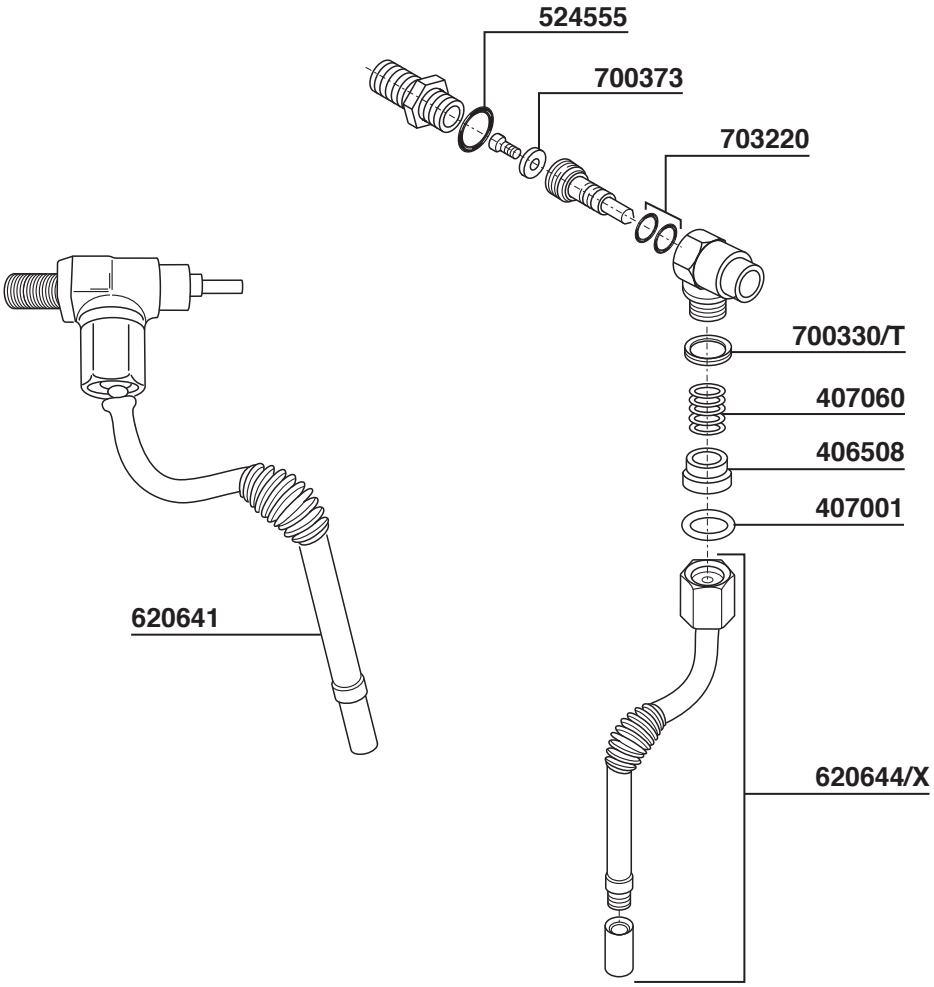
524555
700373
703220
700330/T
407060
406508
407001
620641
620644/X

APPARTAMENTO - MOZZAFIATO/GIOTTO CRONOMETRO R
MOZZAFIATO/GIOTTO CRONOMETRO V - R58 - R60V

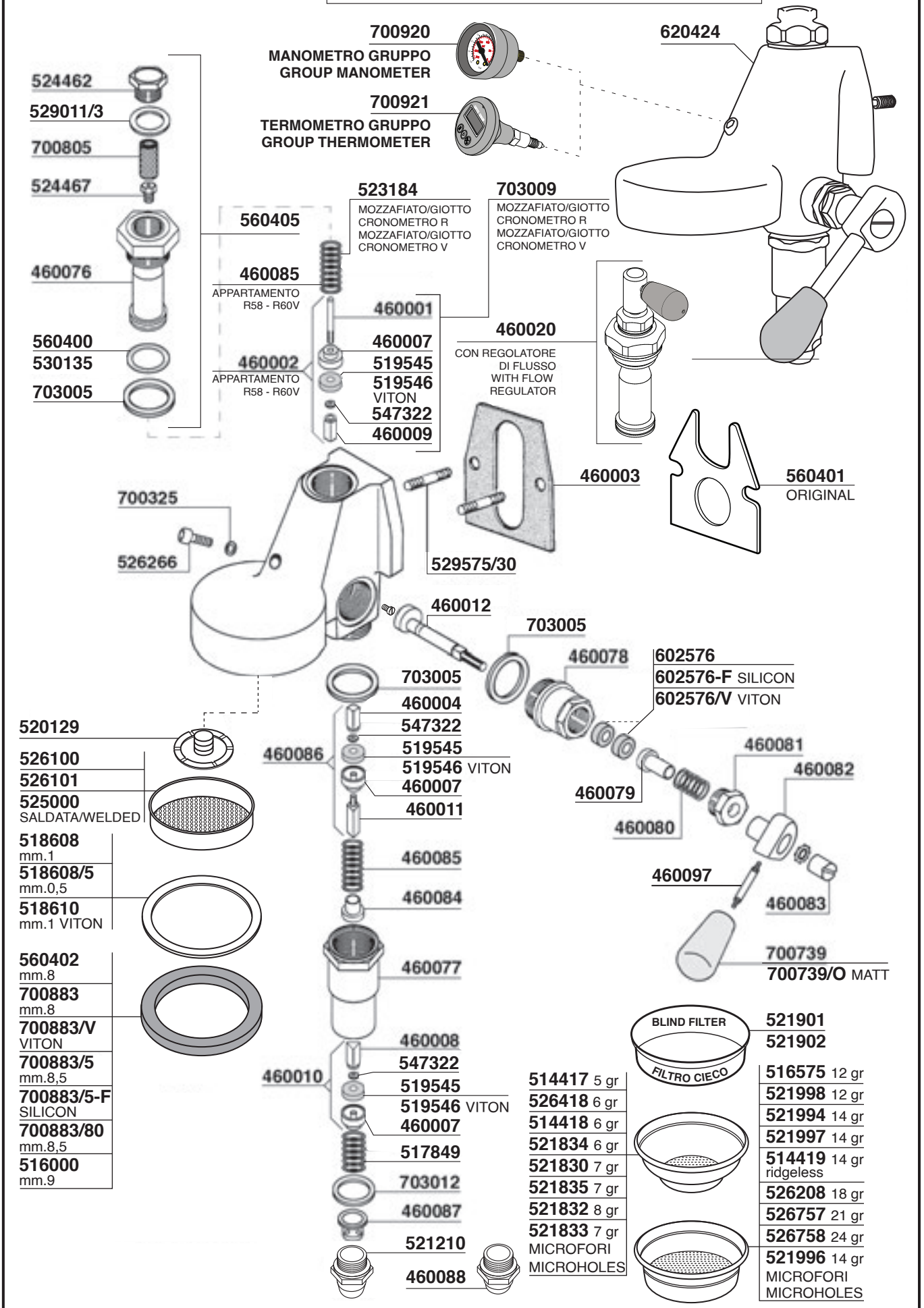

ROCKET

Tav. 02

R NINE ONE

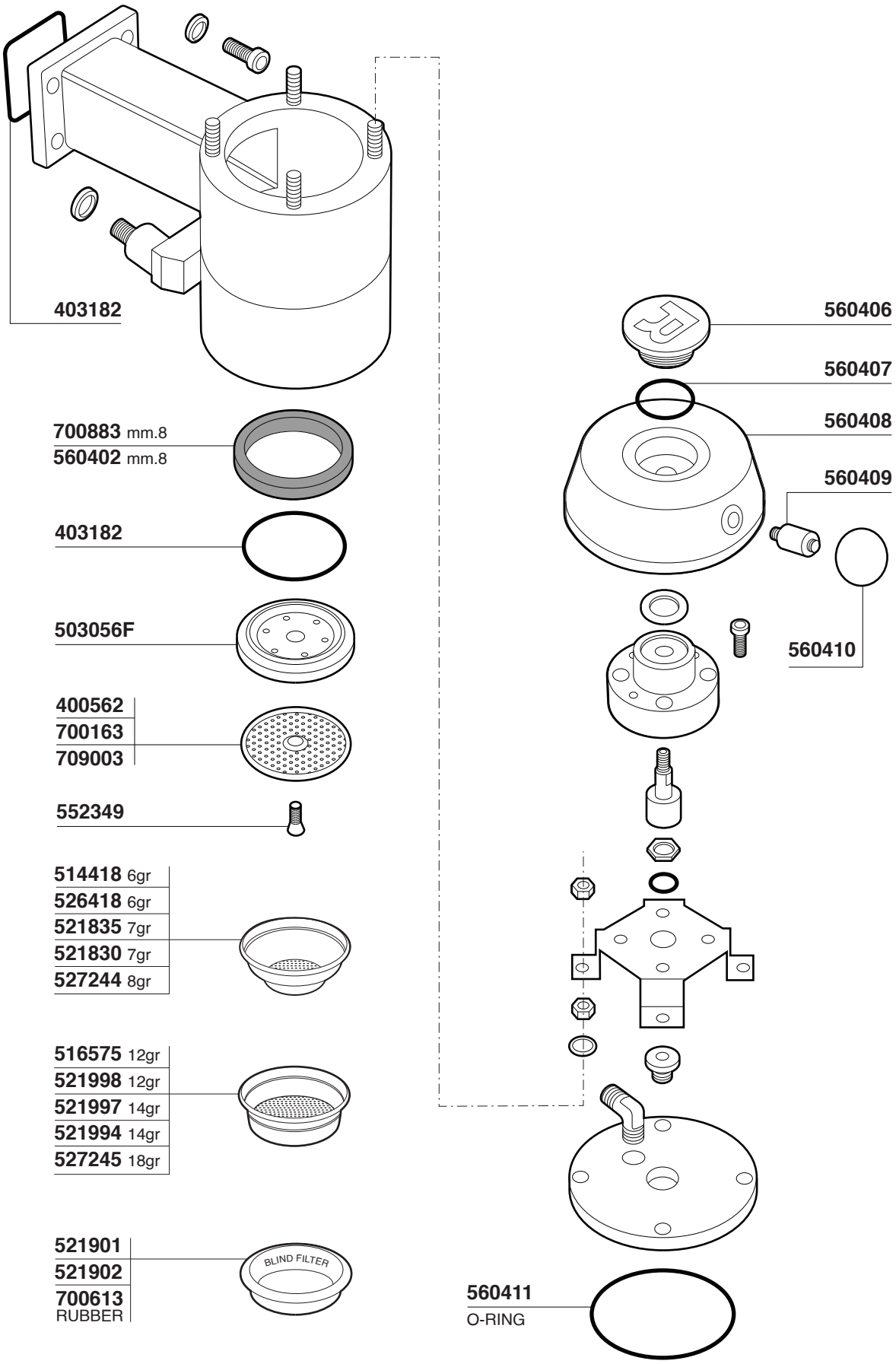

APPARTAMENTO - MOZZAFIATO/GIOTTO CRONOMETRO R
MOZZAFIATO/GIOTTO CRONOMETRO V - R58 - R60V

560403
ORIGINAL

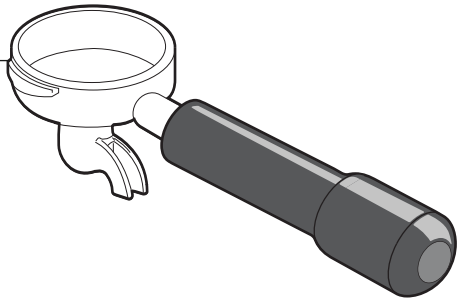

460089/2

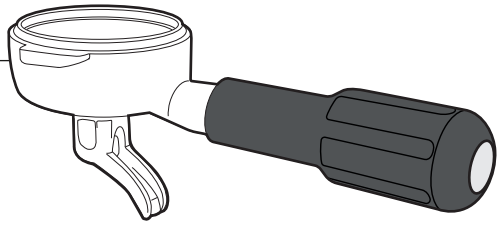

460090/2

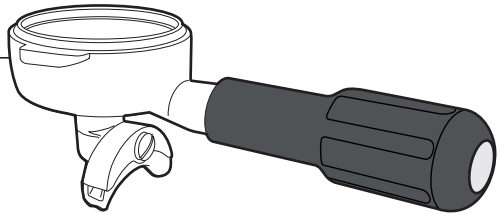

560404
ORIGINAL

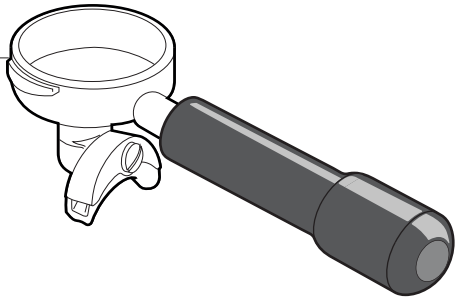

460016/N

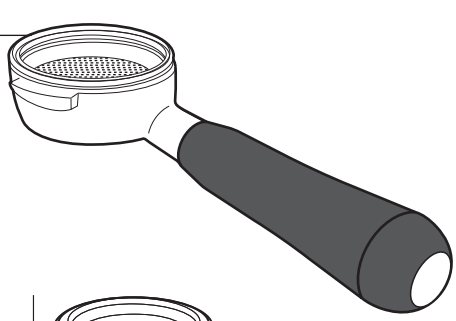

624050/A
ACERO / MAPLE
624050/N
NOCE / WALNUT
624050/U
ULIVO / OLIVE

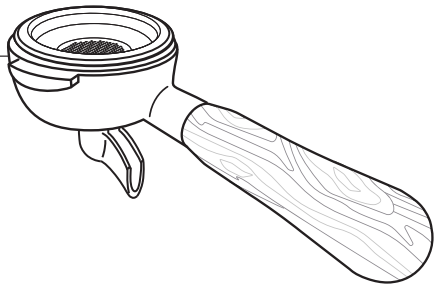

624051/A
ACERO / MAPLE
624051/N
NOCE / WALNUT
624051/U
ULIVO / OLIVE

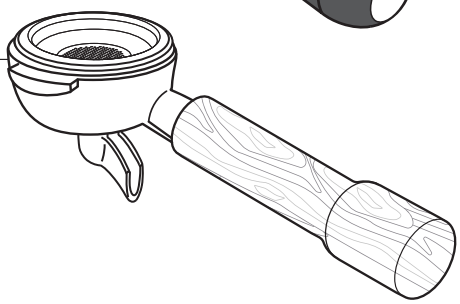

624000/A
ACERO / MAPLE
624000/N
NOCE / WALNUT
624000/U
ULIVO / OLIVE

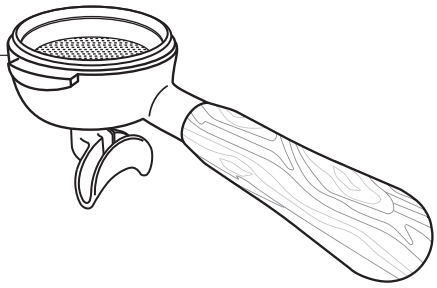

624001/A
ACERO / MAPLE
624001/N
NOCE / WALNUT
624001/U
ULIVO / OLIVE

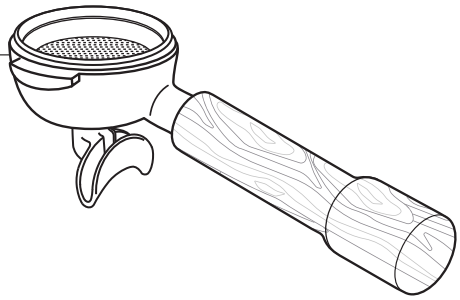

626000/A
ACERO / MAPLE
626000/N
NOCE / WALNUT
626000/U
ULIVO / OLIVE

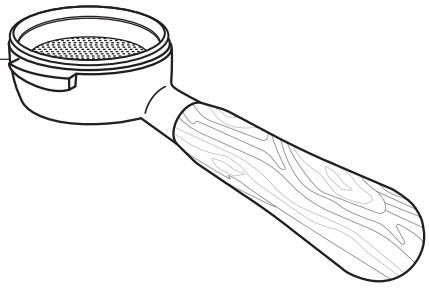

626001/A
ACERO / MAPLE
626001/N
NOCE / WALNUT
626001/U
ULIVO / OLIVE

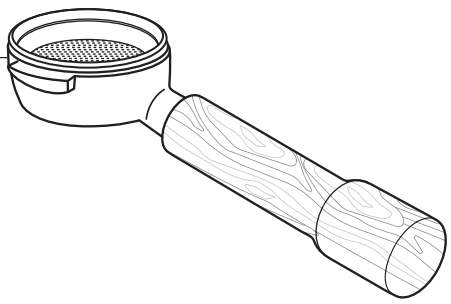

R NINE ONE

700300
STRAIGHT

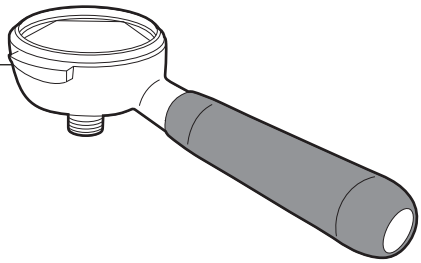

560413
ORIGINAL

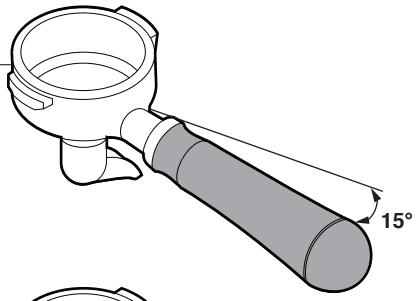

617709
STRAIGHT

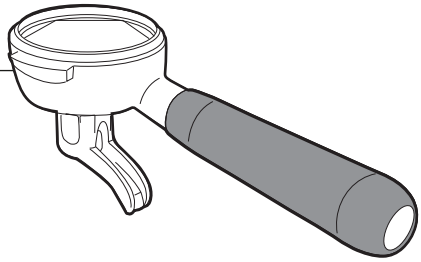

560412
ORIGINAL

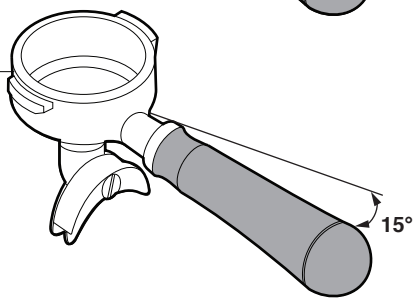

617710
STRAIGHT

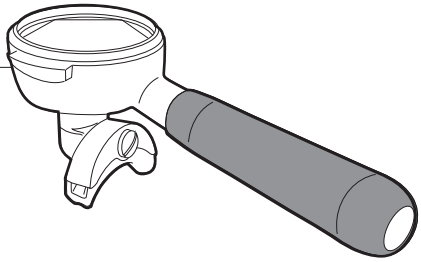

700299/N

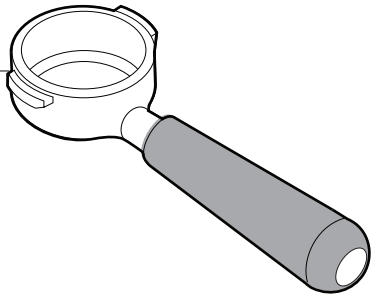

624450/A
ACERO / MAPLE
624450/N
NOCE / WALNUT
624450/U
ULIVO / OLIVE

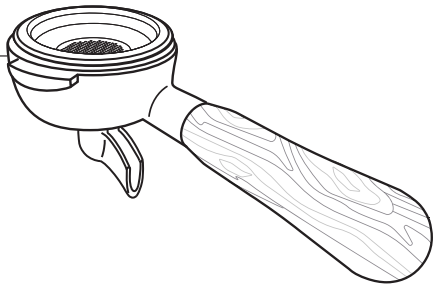

624451/A
ACERO / MAPLE
624451/N
NOCE / WALNUT
624451/U
ULIVO / OLIVE

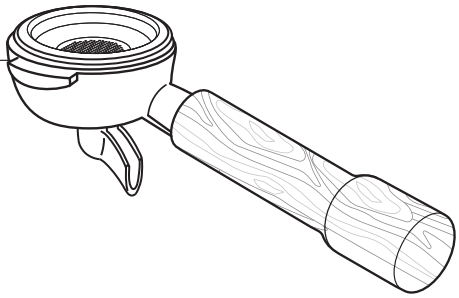

624400/A
ACERO / MAPLE
624400/N
NOCE / WALNUT
624400/U
ULIVO / OLIVE

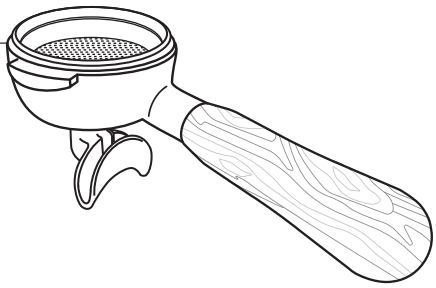

624401/A
ACERO / MAPLE
624401/N
NOCE / WALNUT
624401/U
ULIVO / OLIVE

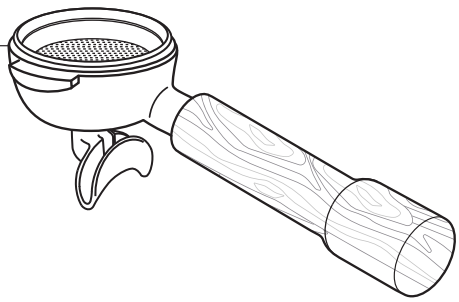

626006/A
ACERO / MAPLE
626006/N
NOCE / WALNUT
626006/U
ULIVO / OLIVE

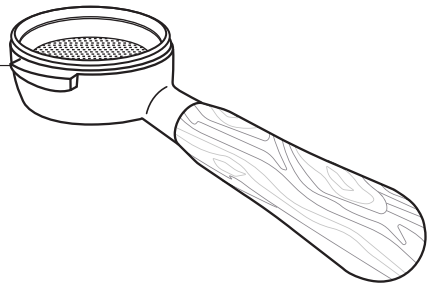

626007/A
ACERO / MAPLE
626007/N
NOCE / WALNUT
626007/U
ULIVO / OLIVE

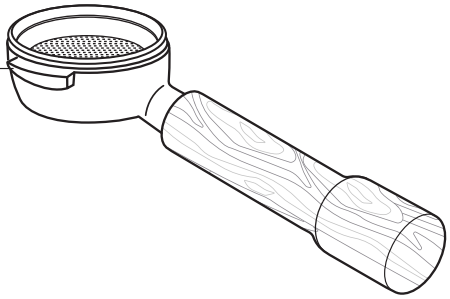

APPARTAMENTO - MOZZAFIATO CRONOMETRO R
MOZZAFIATO CRONOMETRO V

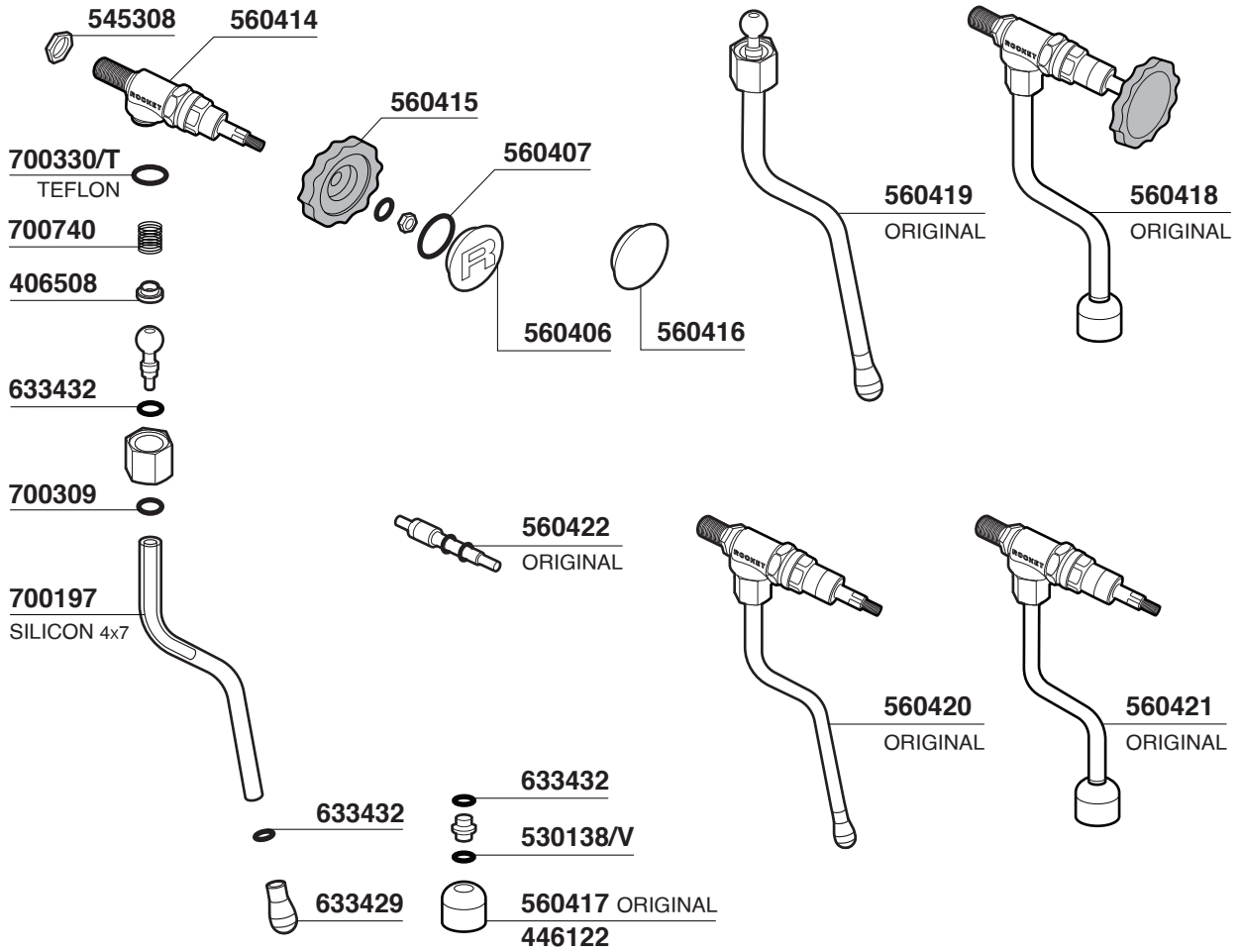

R58 - R60V

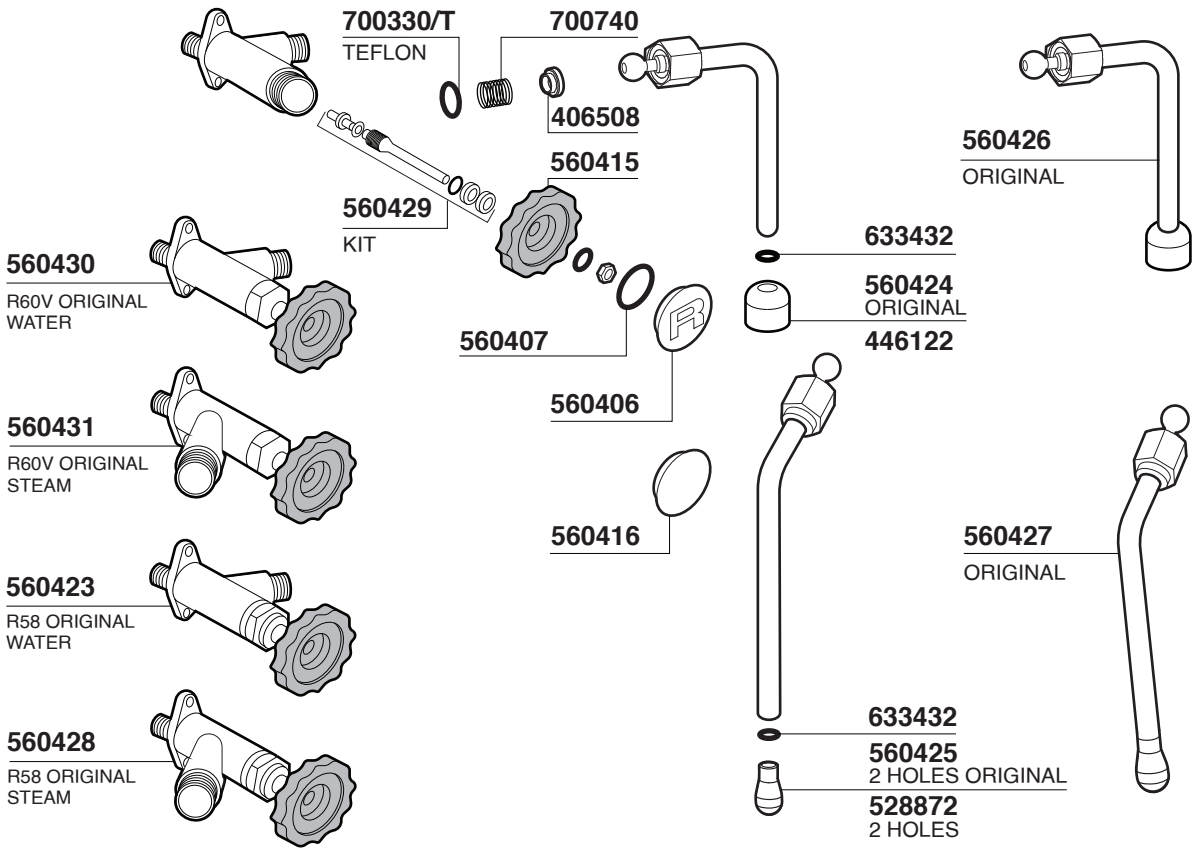

R NINE ONE

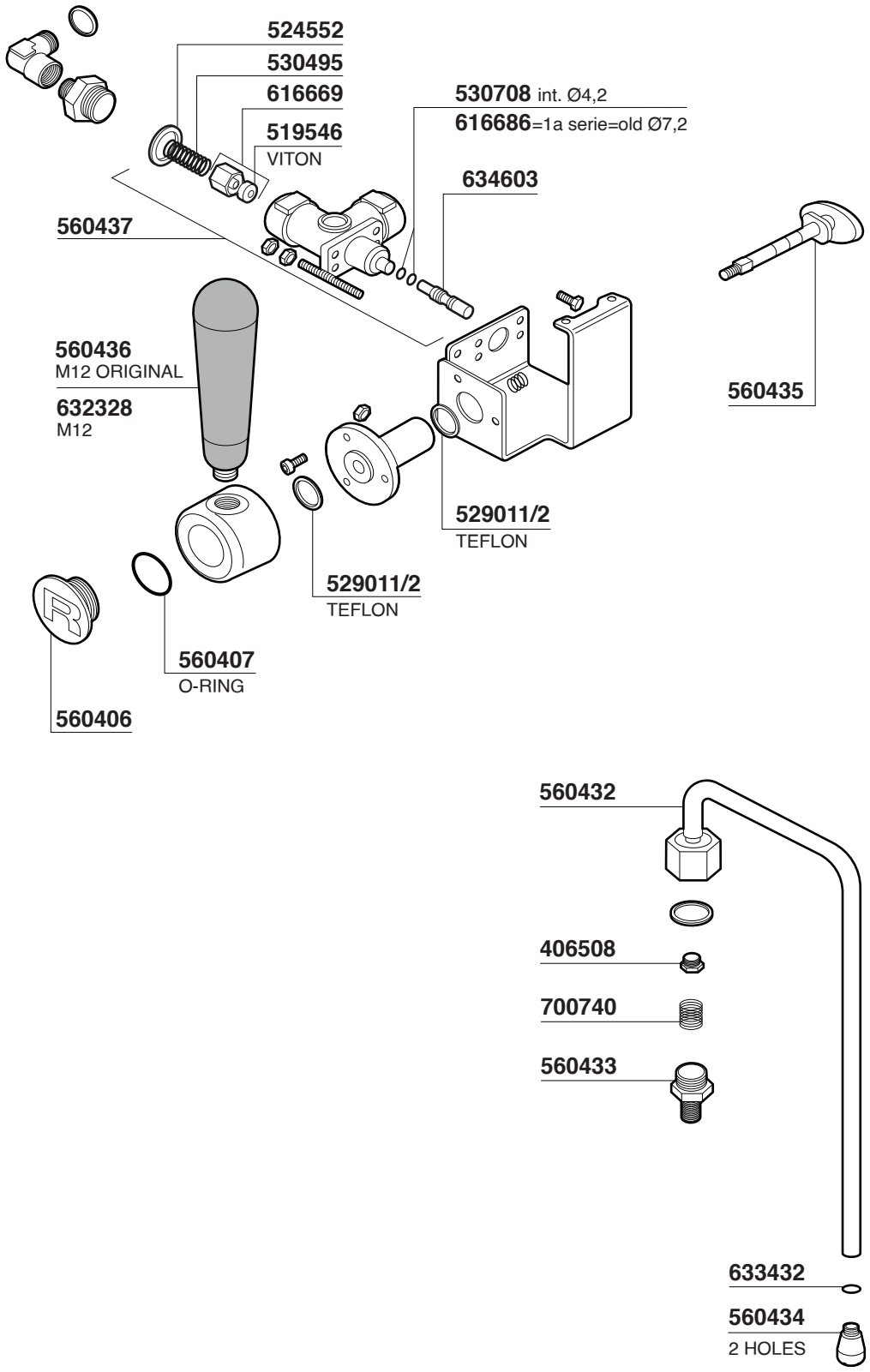
524552
530495
616669
519546
VITON
530708 int. Ø4,2
616686=1a serie=old Ø7,2
634603
560437
560436
M12 ORIGINAL
632328
M12
560435
529011/2
TEFLON
529011/2
TEFLON
560407
O-RING
560406
560432
406508
700740
560433
633432
560434
2 HOLES

APPARTAMENTO

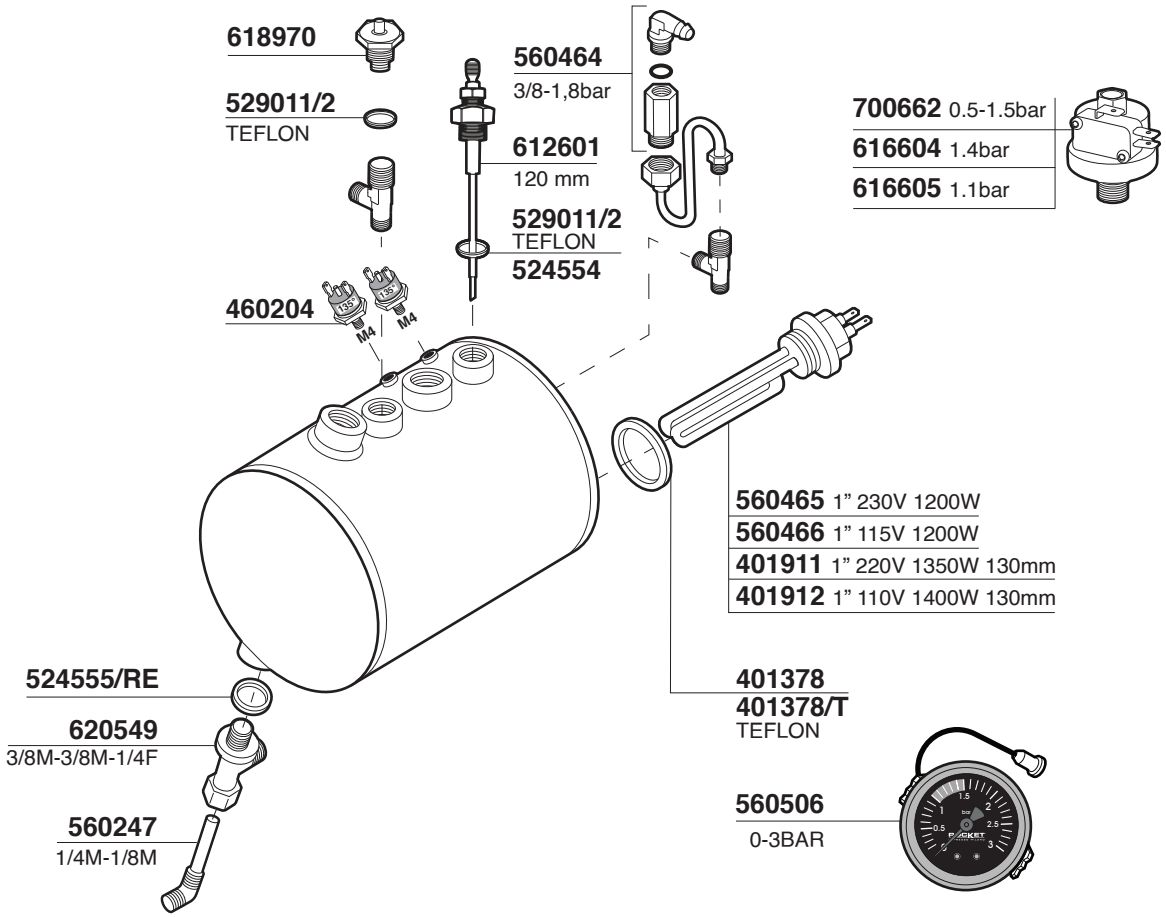

MOZZAFIATO/GIOTTO CRONOMETRO R
MOZZAFIATO/GIOTTO CRONOMETRO V

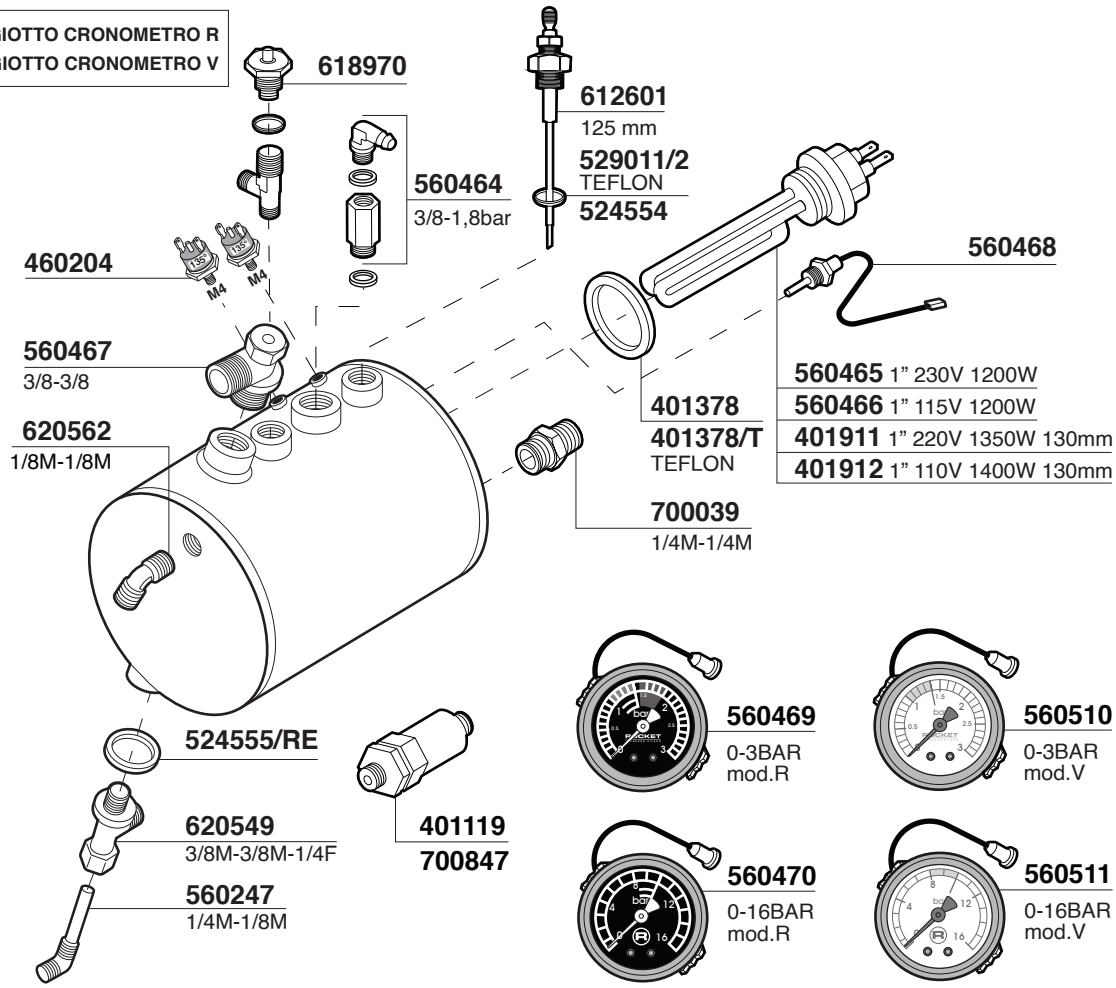

ROCKET

R58 - R60V

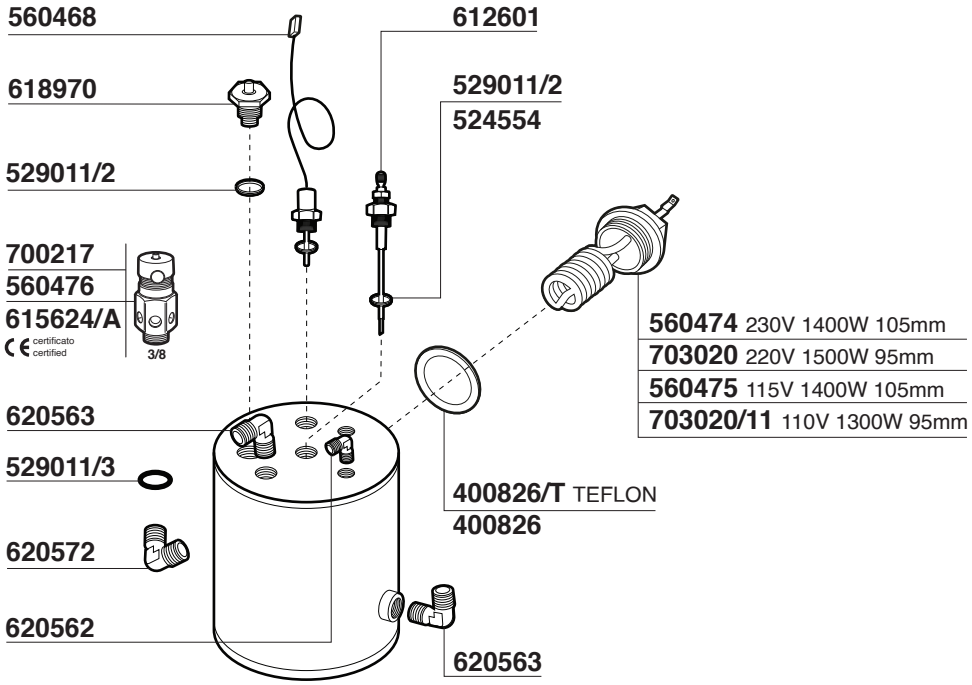

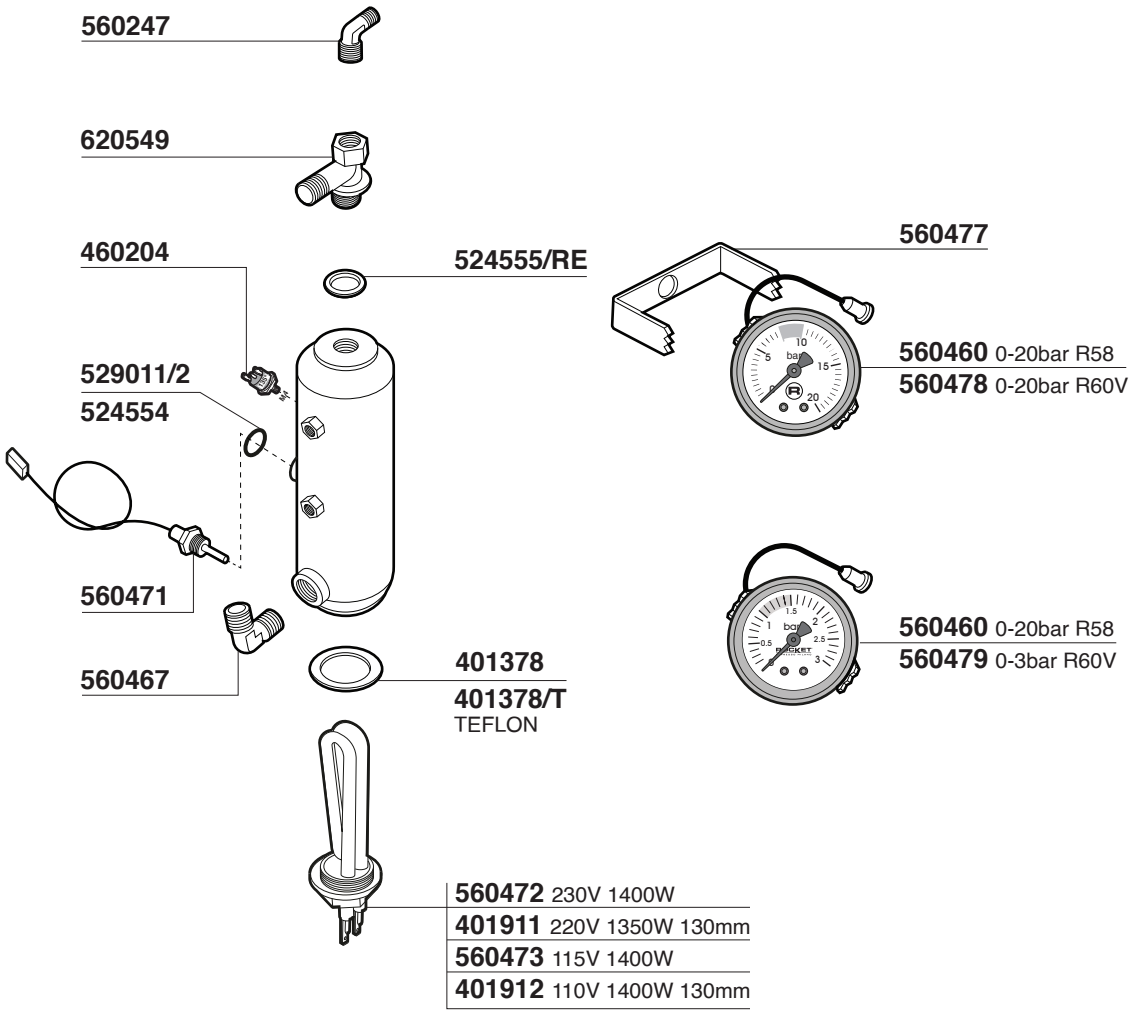

R NINE ONE

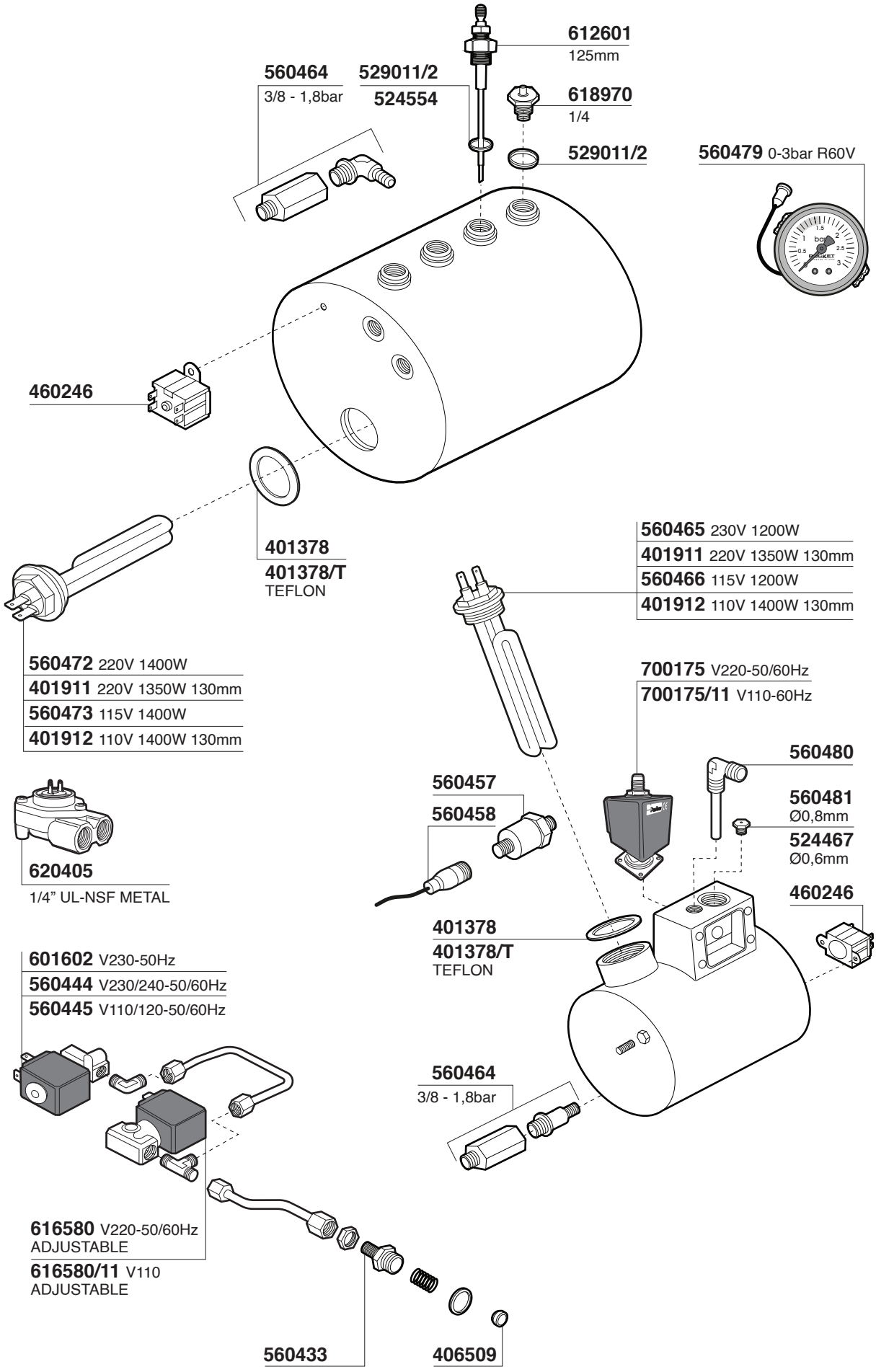
612601
125mm
560464
3/8 - 1,8bar
529011/2
524554
618970
1/4
529011/2
560479 0-3bar R60V
460246
401378
401378/T
TEFLON
560465 230V 1200W
401911 220V 1350W 130mm
560466 115V 1200W
401912 110V 1400W 130mm
560472 220V 1400W
401911 220V 1350W 130mm
560473 115V 1400W
401912 110V 1400W 130mm
700175 V220-50/60Hz
700175/11 V110-60Hz
560480
560457
560458
560481
Ø0,8mm
524467
Ø0,6mm
620405
1/4" UL-NSF METAL
460246
401378
401378/T
TEFLON
601602 V230-50Hz
560444 V230/240-50/60Hz
560445 V110/120-50/60Hz
560464
3/8 - 1,8bar
616580 V220-50/60Hz
ADJUSTABLE
616580/11 V110
ADJUSTABLE
560433
406509

ROCKET

Tav. 10

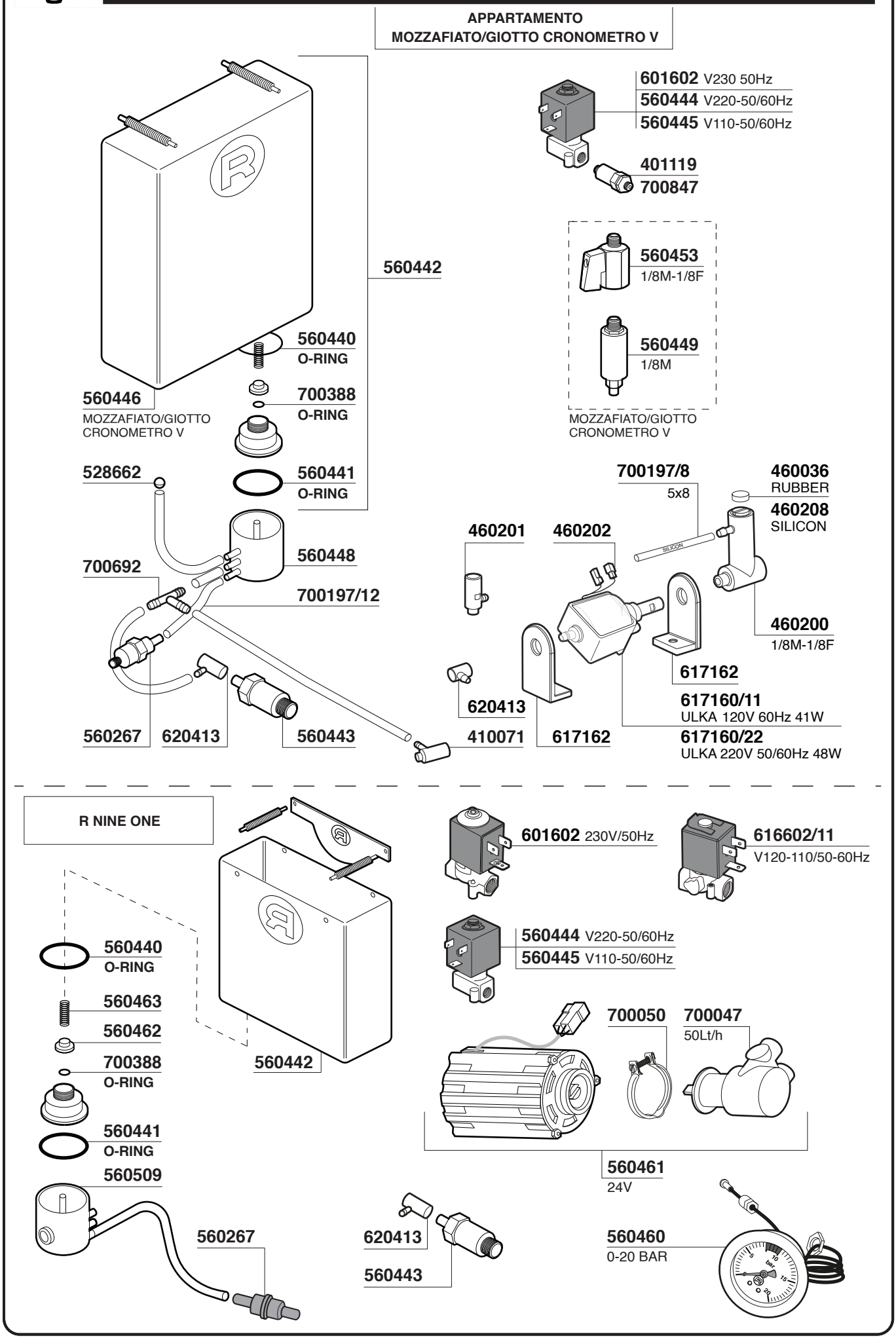

MOZZAFIATO/GIOTTO CRONOMETRO R

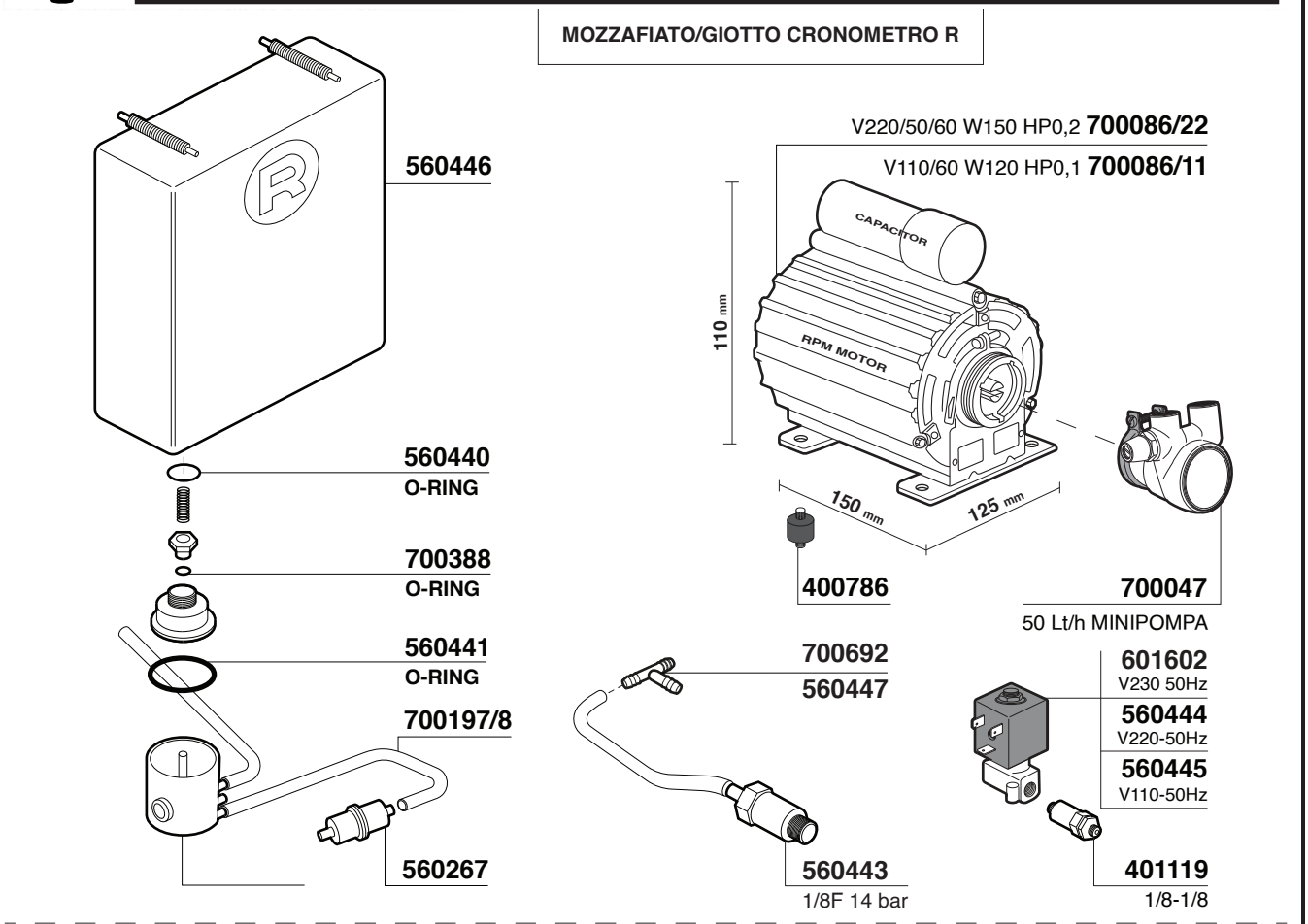

R58 - R60V

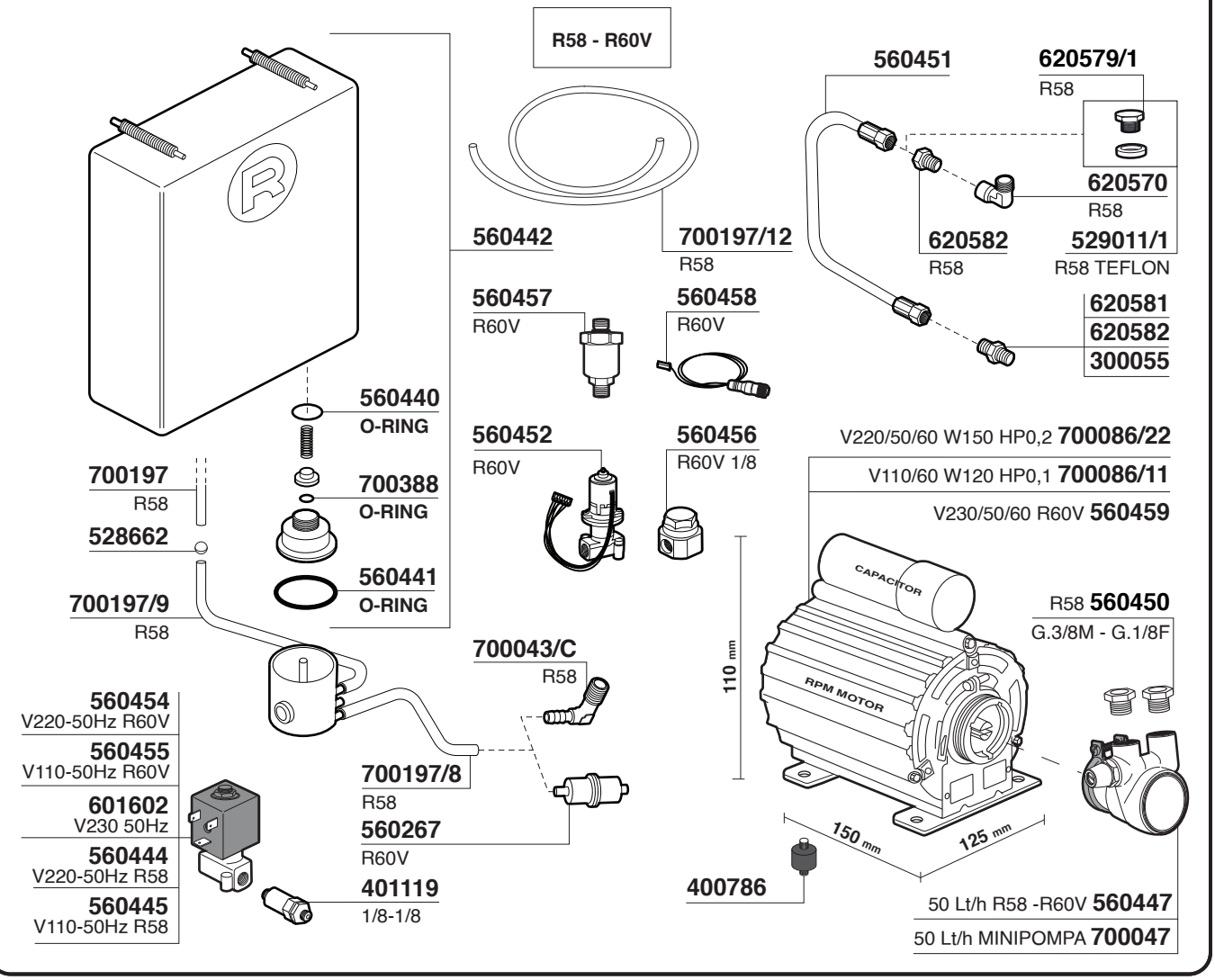

ROCKET

Tav. 12

APPARTAMENTO

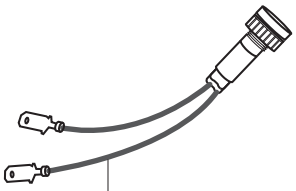

560507
GREEN

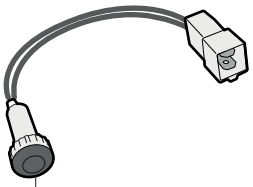

703122
GREEN

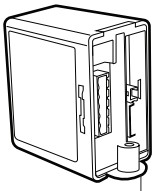

560438 V240
GICAR CODE 9.1.41.92G00

560439 V115
GICAR CODE 9.1.41.92G

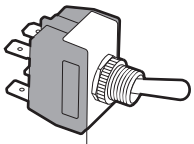

560231
250V 16A

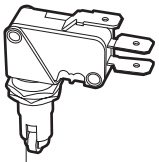

574216

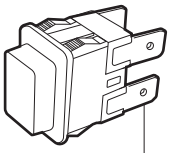

ORANGE V230 = 620630
2 POLE LUMINOUS SWITCH

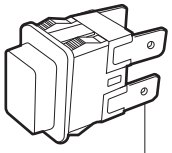

GREEN V230 = 560508
2 POLE LUMINOUS SWITCH

MOZZAFIATO/GIOTTO CRONOMETRO R
MOZZAFIATO/GIOTTO CRONOMETRO V

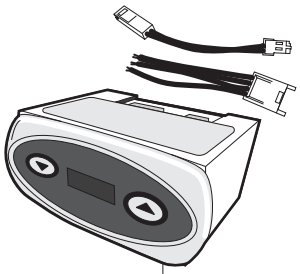

560483
V220 - 50Hz

560484
V115 - 50Hz

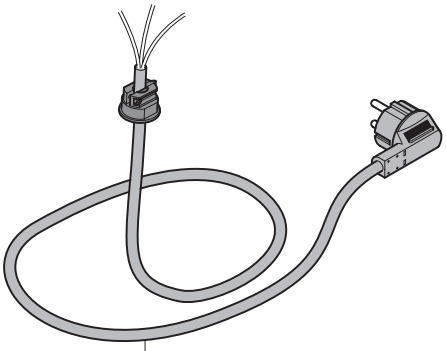

560482
CE

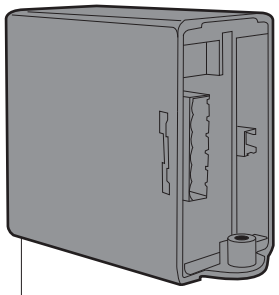

560486 230/240V 50/60Hz
560487 115V 60Hz

560502

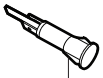

560500

560485
110/250V

560489

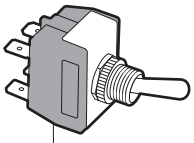

560231
250V 16A

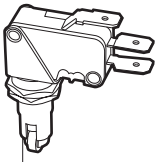

574216

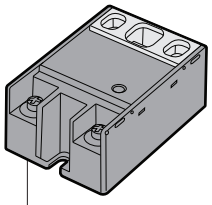

560230

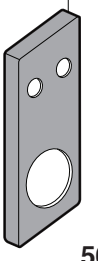

560488

R58 - R60V

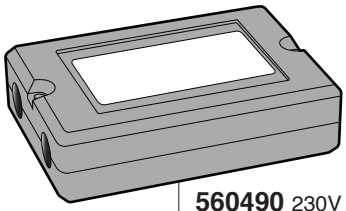

560490 230V R58
560491 115V R58
560495 100/240V R60V

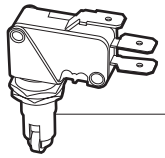

574216

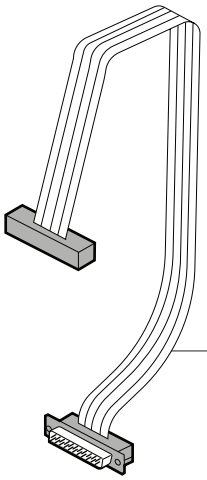

703220
R60V

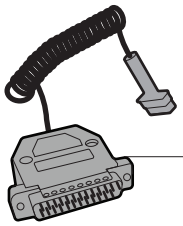

560494

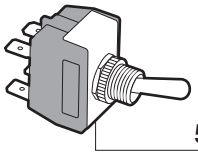

560493

560231

560492

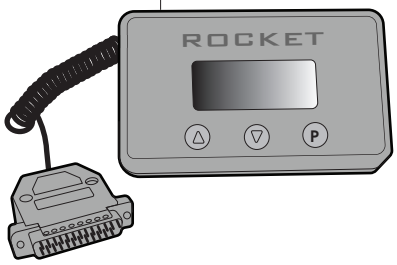

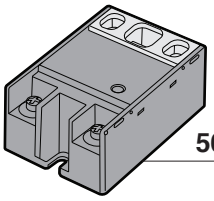

560230

560502

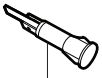

560485
110/250V

560500

R NINE ONE

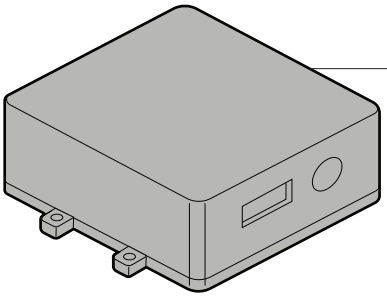

560496 100W - 115Vac
560497 100W - 200/240Vac

560498

560499

560505
0 - 1

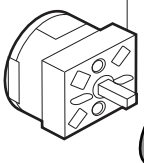

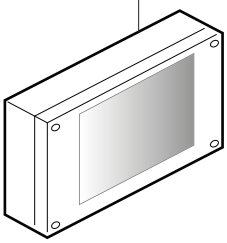

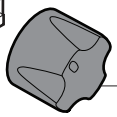

560501

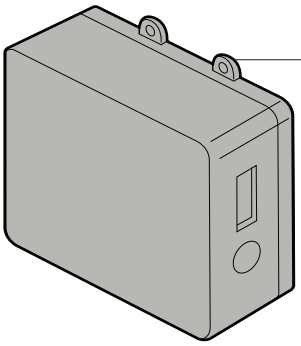

560503 115/230V

560502

560504

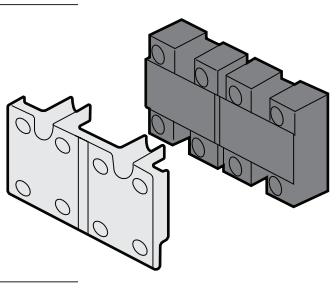

560485
110/250V

560500

SANREMO

Tav. 01

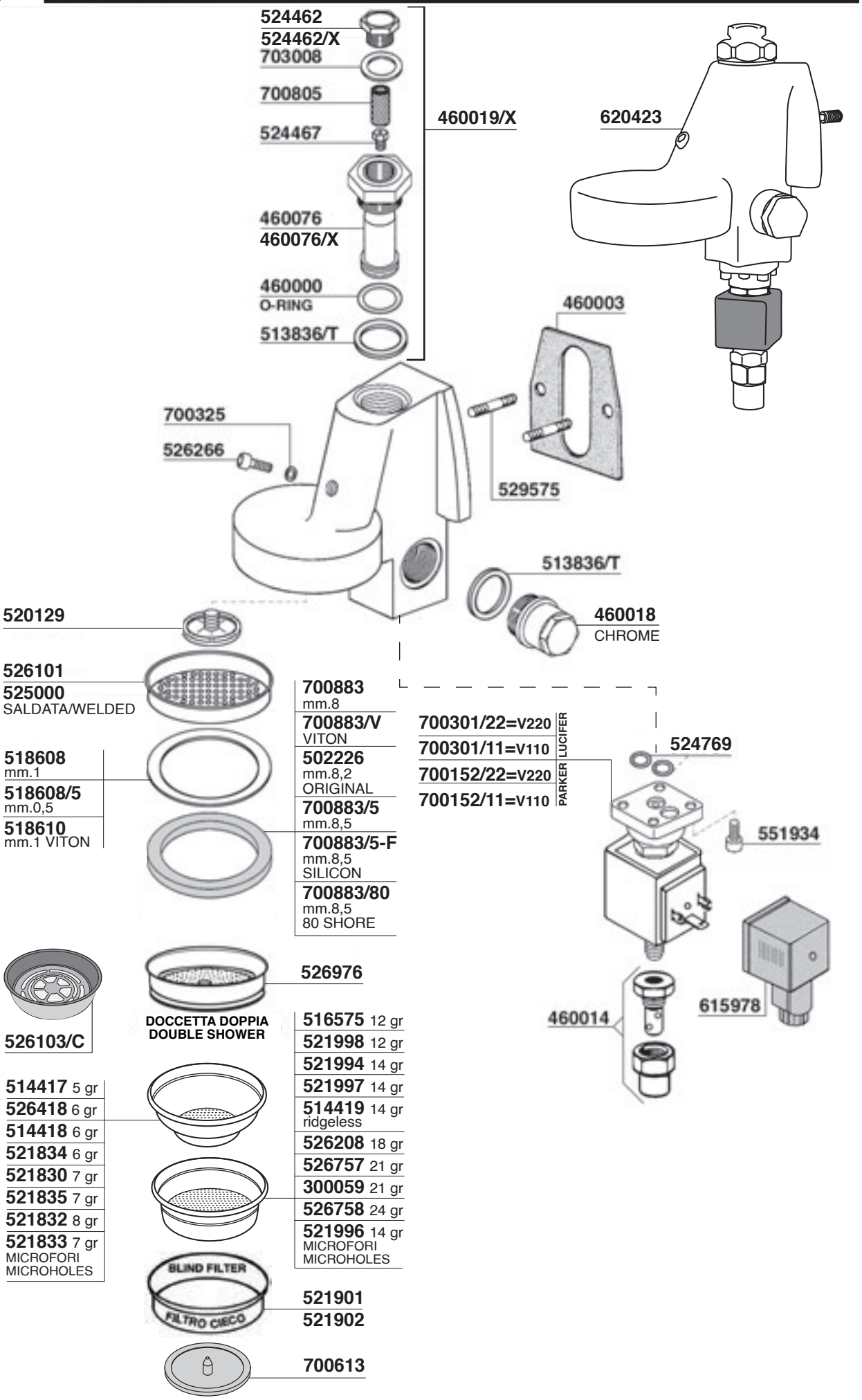

SANREMO

Tav. 02

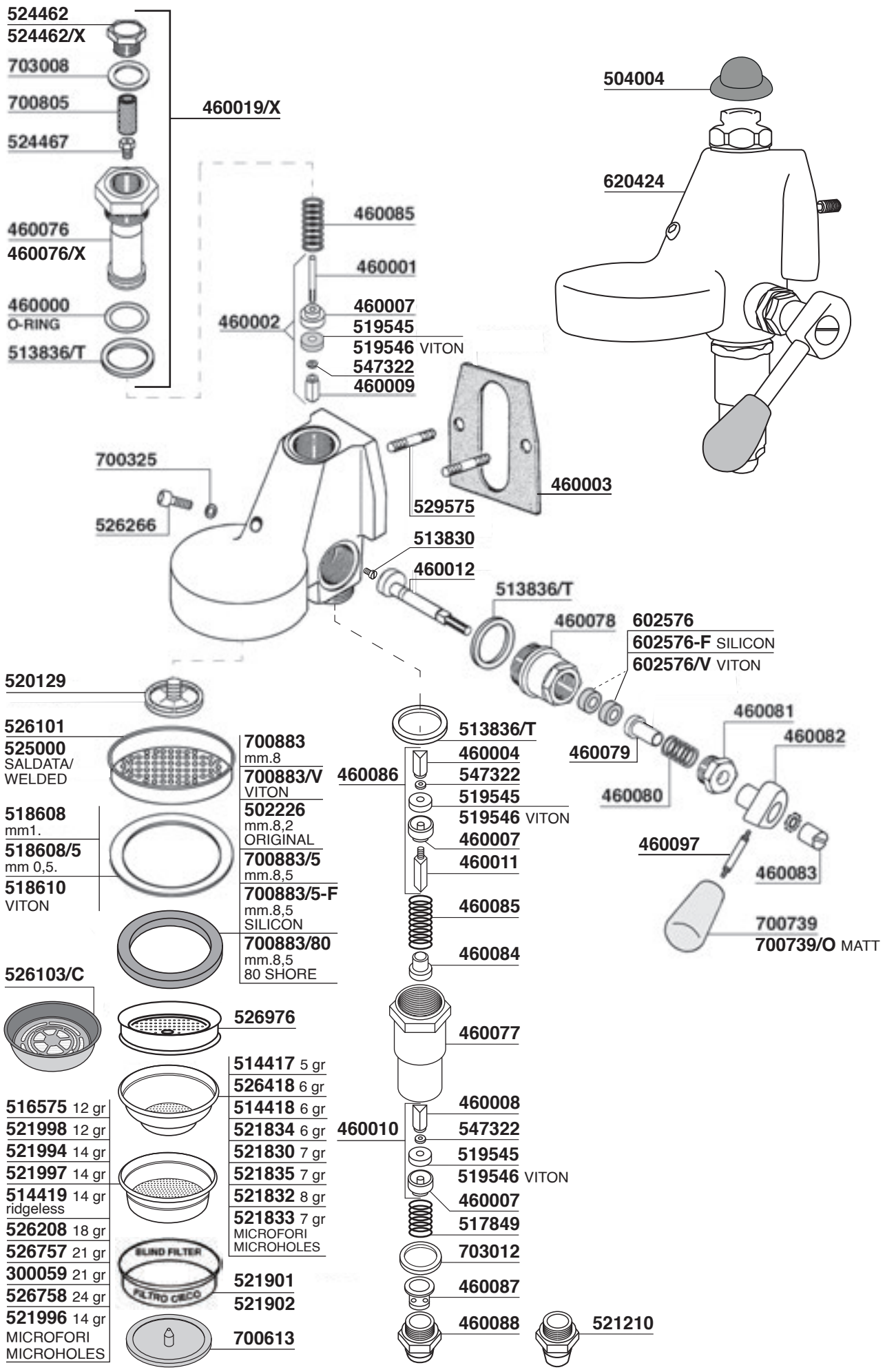

SANREMO

Tav. 03

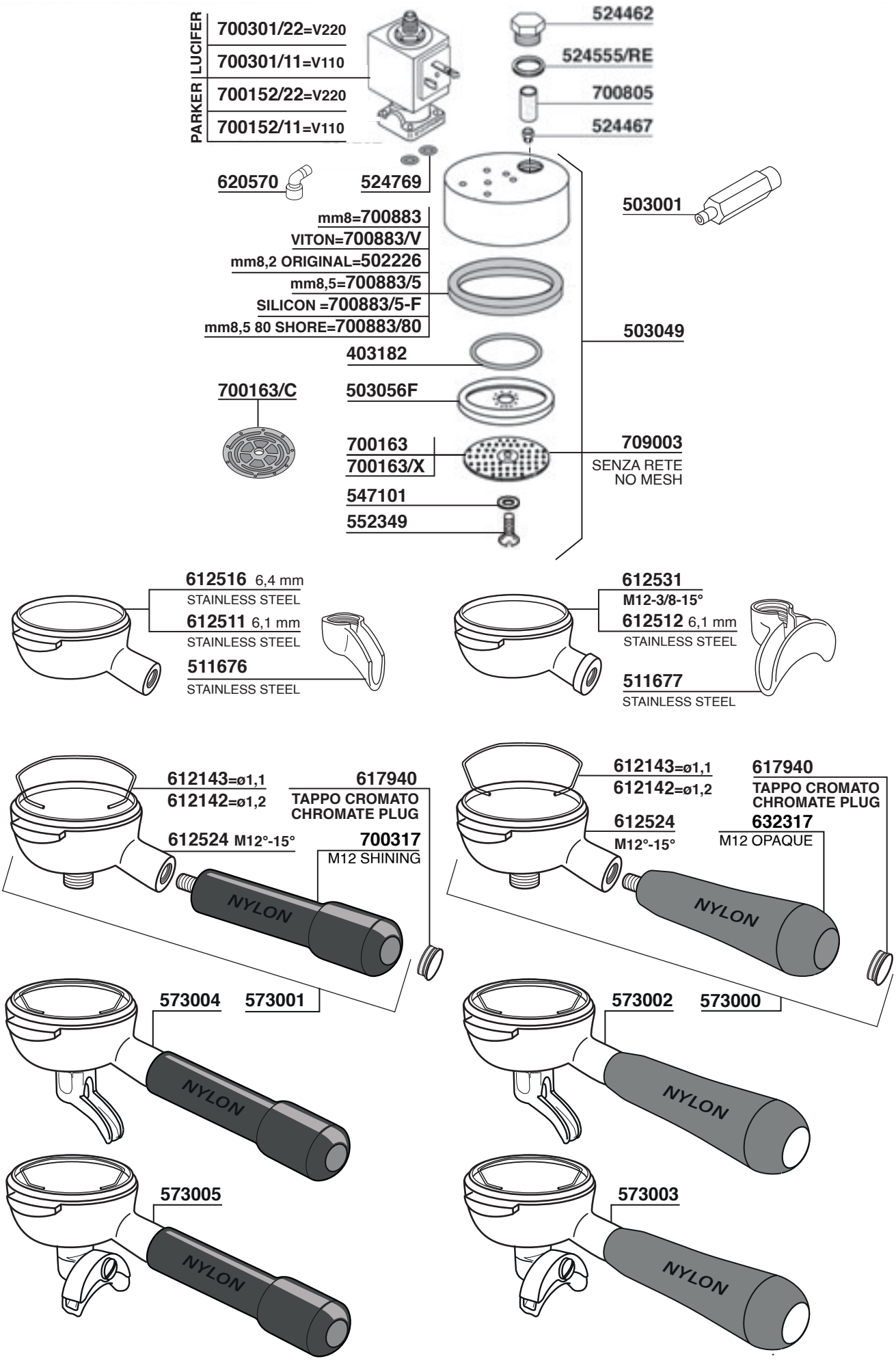

SANREMO

Tav. 04

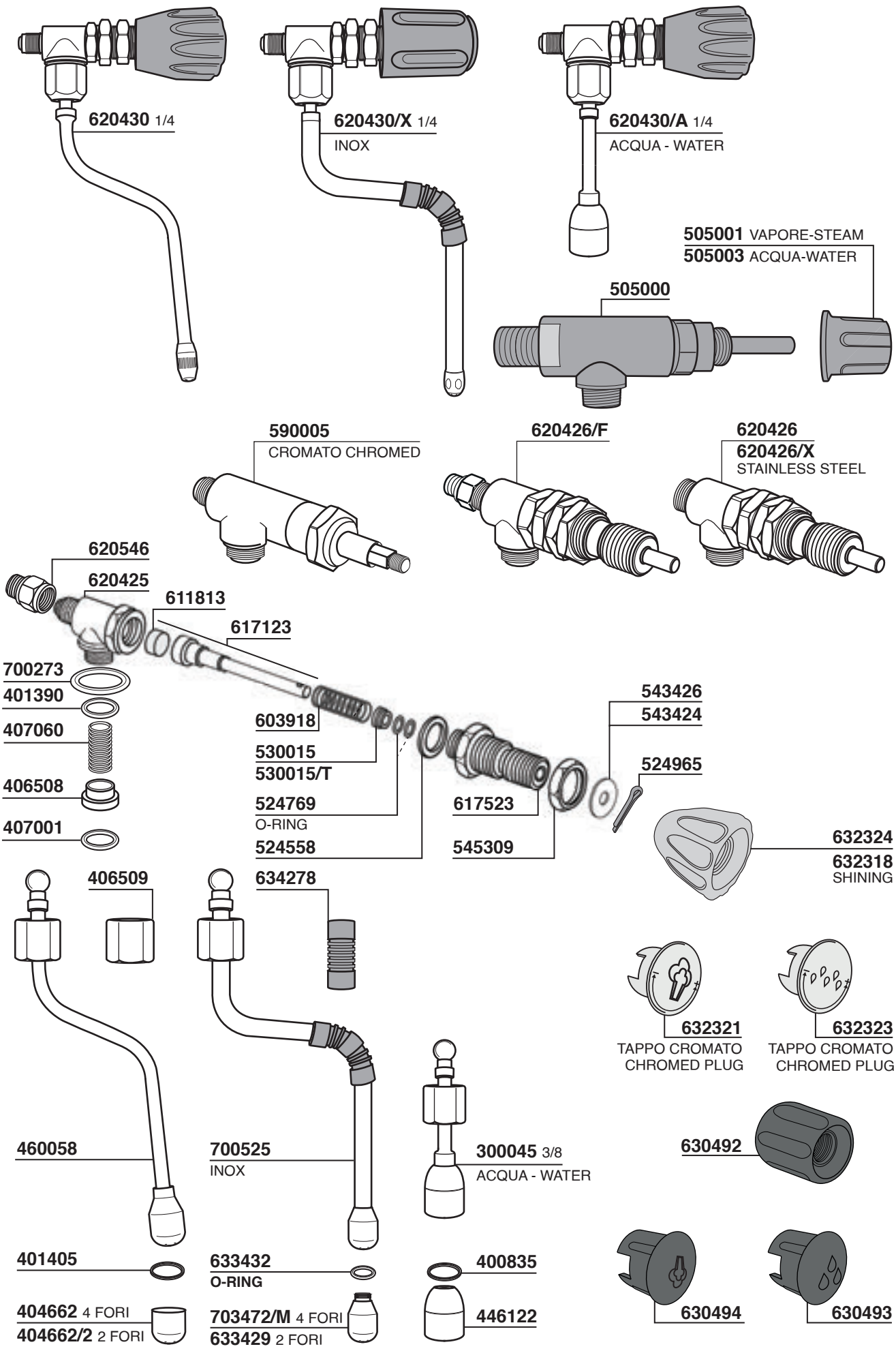

SANREMO

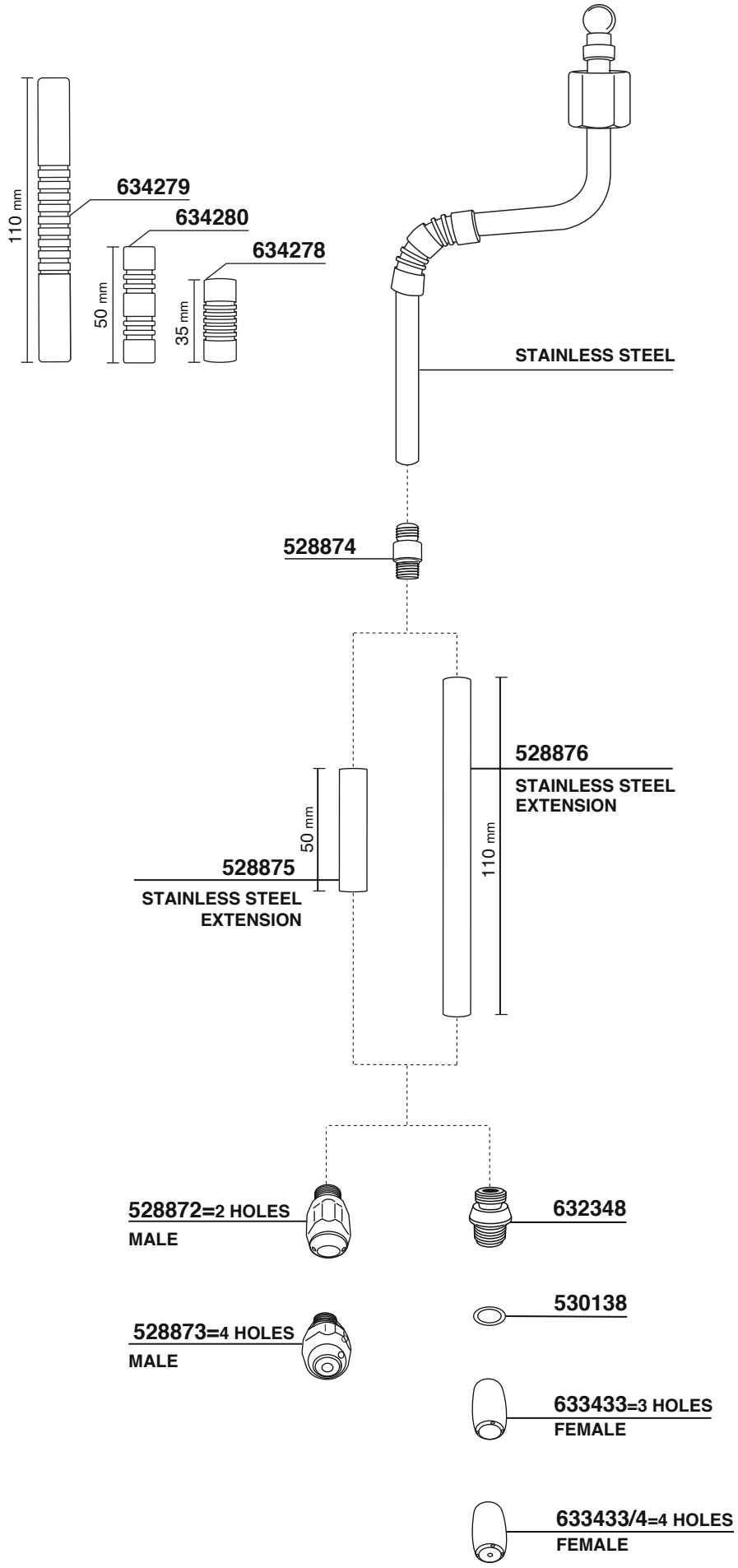
110 mm
634279
634280
634278
50 mm
35 mm
STAINLESS STEEL
528874
528876
STAINLESS STEEL
EXTENSION
50 mm
110 mm
528875
STAINLESS STEEL
EXTENSION
528872=2 HOLES
MALE
632348
530138
528873=4 HOLES
MALE
633433=3 HOLES
FEMALE
633433/4=4 HOLES
FEMALE

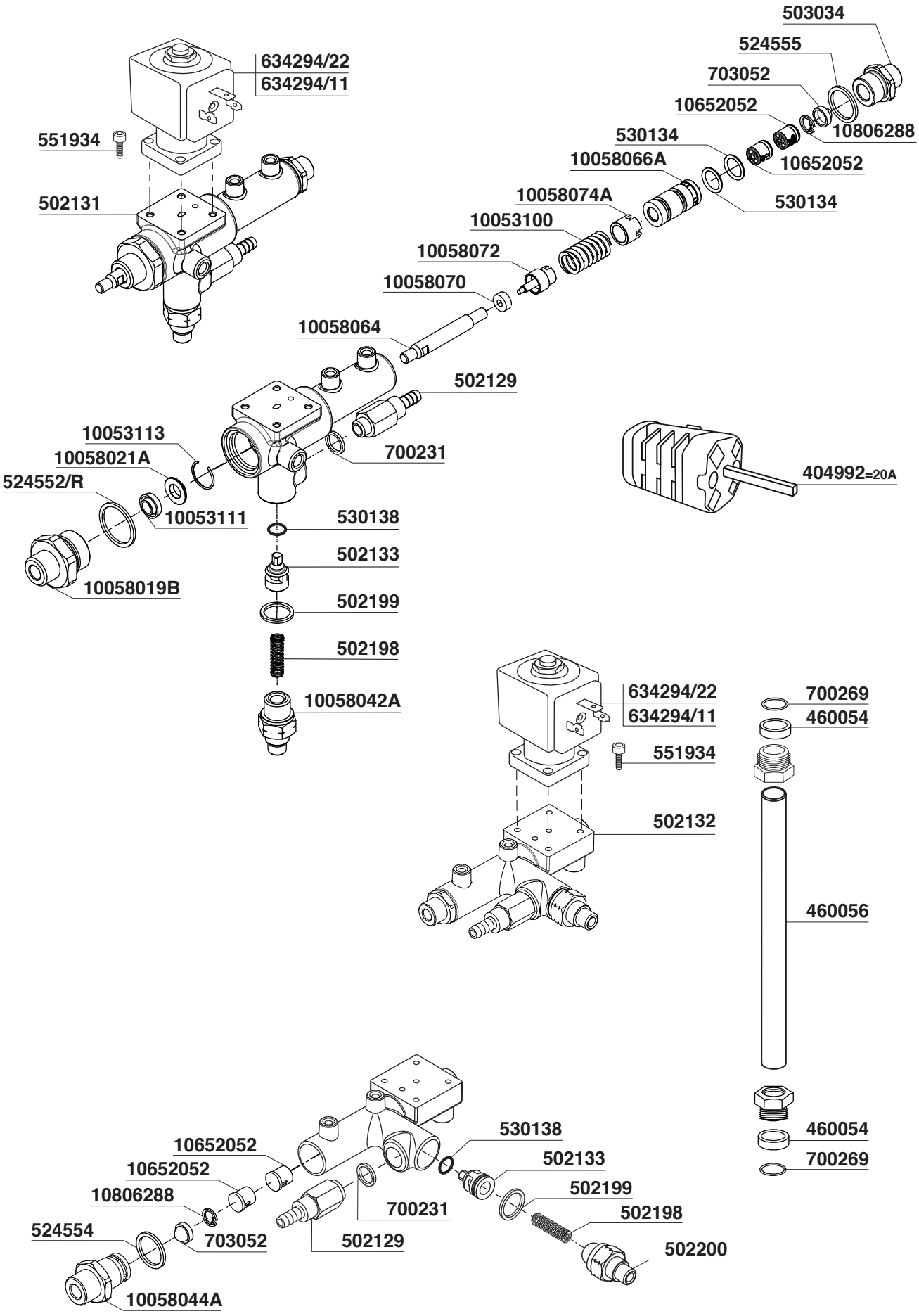
503034
524555
703052
10652052
10806288
530134
10652052
10058066A
530134
10058074A
10053100
10058072
10058070
10058064
502129
634294/22
634294/11
551934
502131
10053113
10058021A
524552/R
10053111
10058019B
700231
530138
502133
502199
502198
10058042A
404992=20A
634294/22
634294/11
551934
502132
700269
460054
460056
460054
700269
530138
502133
502199
502198
502200
10652052
10652052
10806288
524554
703052
10058044A
700231
502129

SANREMO

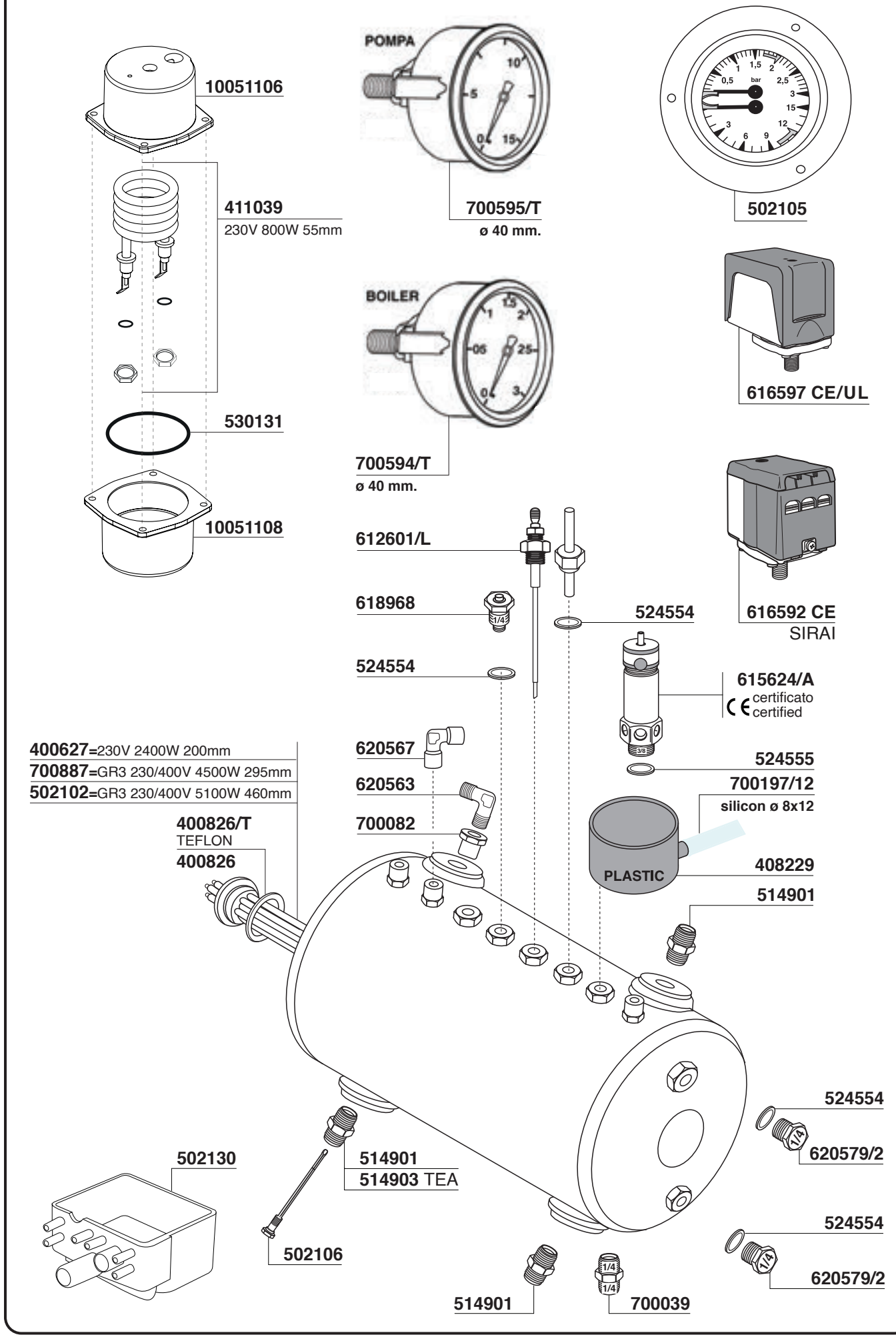
10051106
411039
230V 800W 55mm
530131
10051108
POMPA
700595/T
ø 40 mm.
502105
BOILER
700594/T
ø 40 mm.
616597 CE/UL
612601/L
618968
524554
616592 CE
SIRAI
524554
615624/A
certificato
certified
620567
524555
400627=230V 2400W 200mm
700887=GR3 230/400V 4500W 295mm
502102=GR3 230/400V 5100W 460mm
620563
700197/12
silicon ø 8x12
400826/T
TEFLON
400826
700082
PLASTIC
408229
514901
524554
620579/2
502130
514901
514903 TEA
502106
524554
620579/2
514901
700039

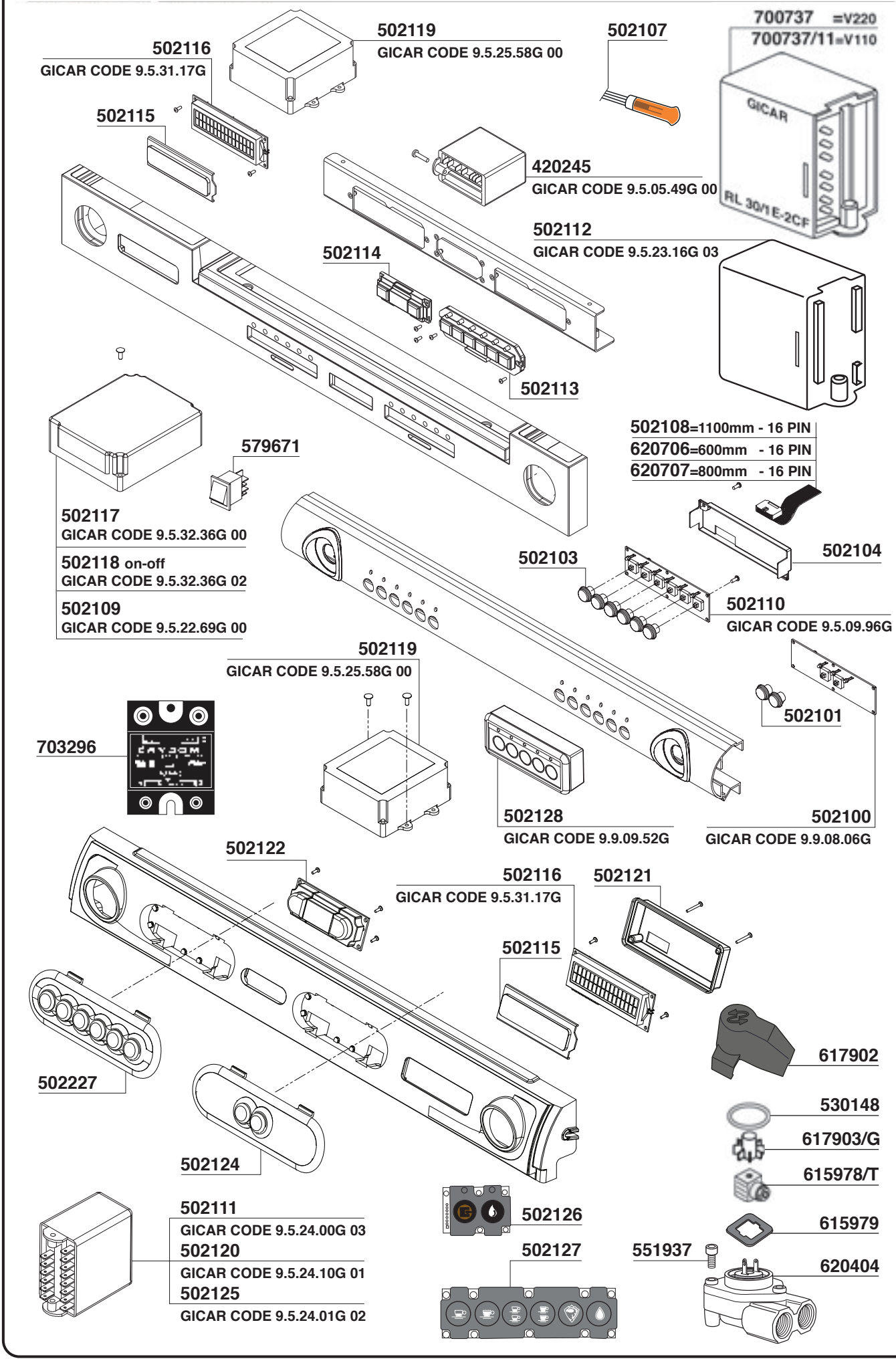
502119
GICAR CODE 9.5.25.58G 00
502116
GICAR CODE 9.5.31.17G
502107
700737 =V220
700737/11=V110
GICAR
RL 30/1 E-2CF
502115
420245
GICAR CODE 9.5.05.49G 00
502112
GICAR CODE 9.5.23.16G 03
502114
502113
502108=1100mm - 16 PIN
620706=600mm - 16 PIN
620707=800mm - 16 PIN
579671
502117
GICAR CODE 9.5.32.36G 00
502118 on-off
GICAR CODE 9.5.32.36G 02
502109
GICAR CODE 9.5.22.69G 00
502104
502103
502110
GICAR CODE 9.5.09.96G
502119
GICAR CODE 9.5.25.58G 00
502101
703296
502128
GICAR CODE 9.9.09.52G
502100
GICAR CODE 9.9.08.06G
502122
502116
GICAR CODE 9.5.31.17G
502121
502115
617902
502227
530148
617903/G
615978/T
502124
502126
615979
502111
GICAR CODE 9.5.24.00G 03
502120
GICAR CODE 9.5.24.10G 01
502125
GICAR CODE 9.5.24.01G 02
502127
551937
620404

SANREMO

Tav.09

CAFE' RACER

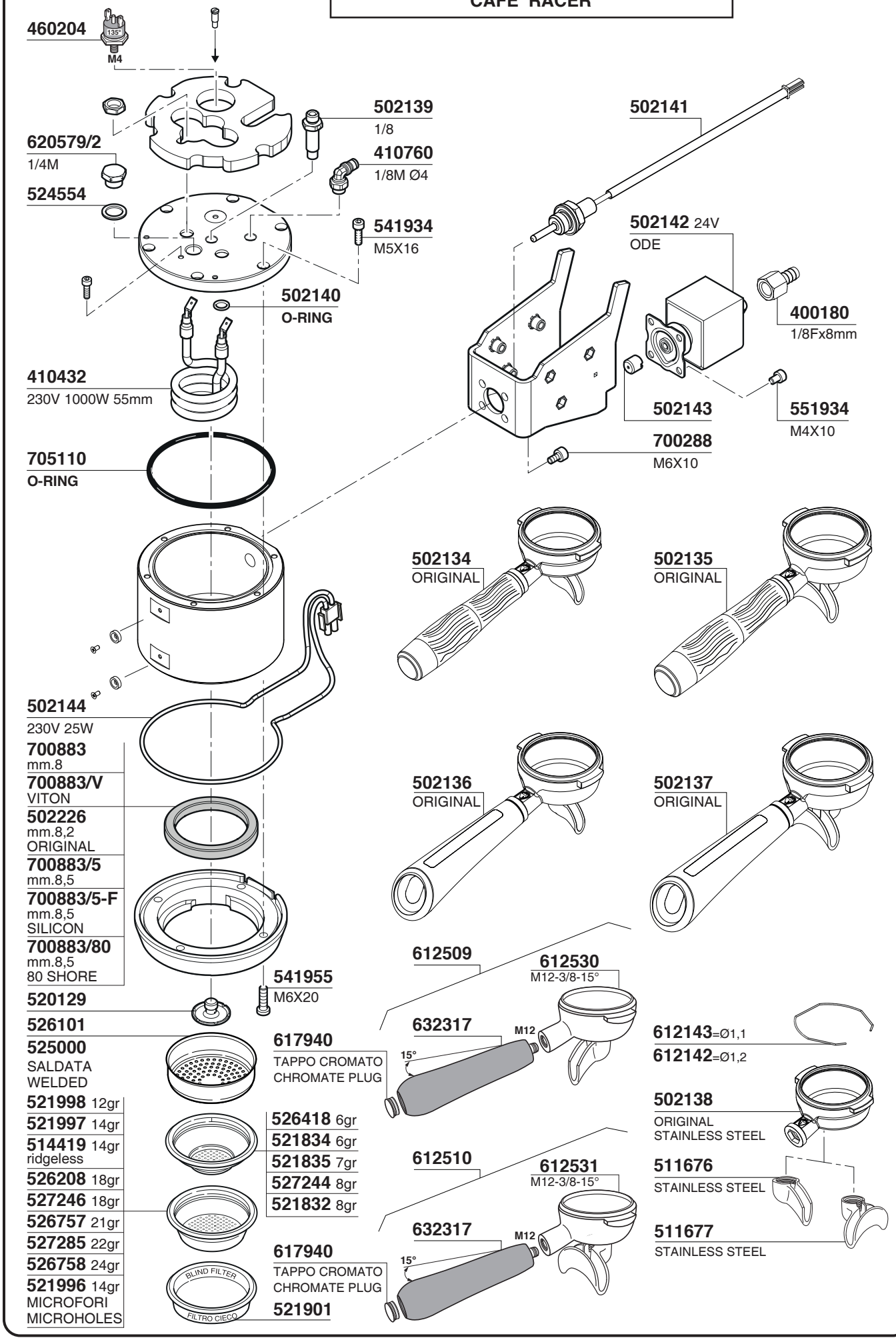

CAFE' RACER

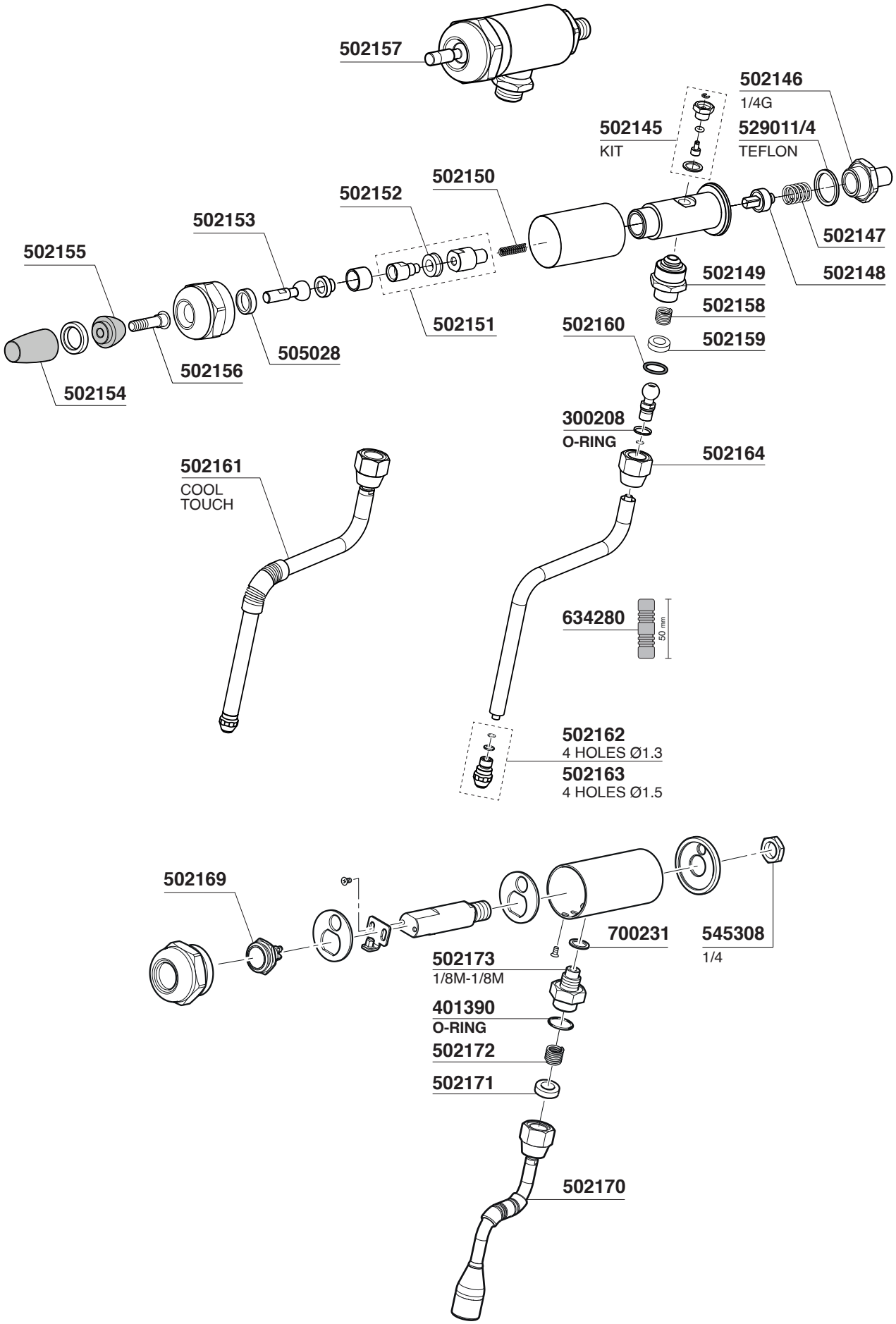
502157
502146
1/4G
502145
KIT
529011/4
TEFLON
502150
502152
502153
502155
502147
502149
502148
502158
502151
502160
502159
505028
502156
502154
300208
O-RING
502164
502161
COOL
TOUCH
634280
50 mm
502162
4 HOLES Ø1.3
502163
4 HOLES Ø1.5
502169
700231
545308
1/4
502173
1/8M-1/8M
401390
O-RING
502172
502171
502170

SANREMO

Tav. 11

CAFE' RACER

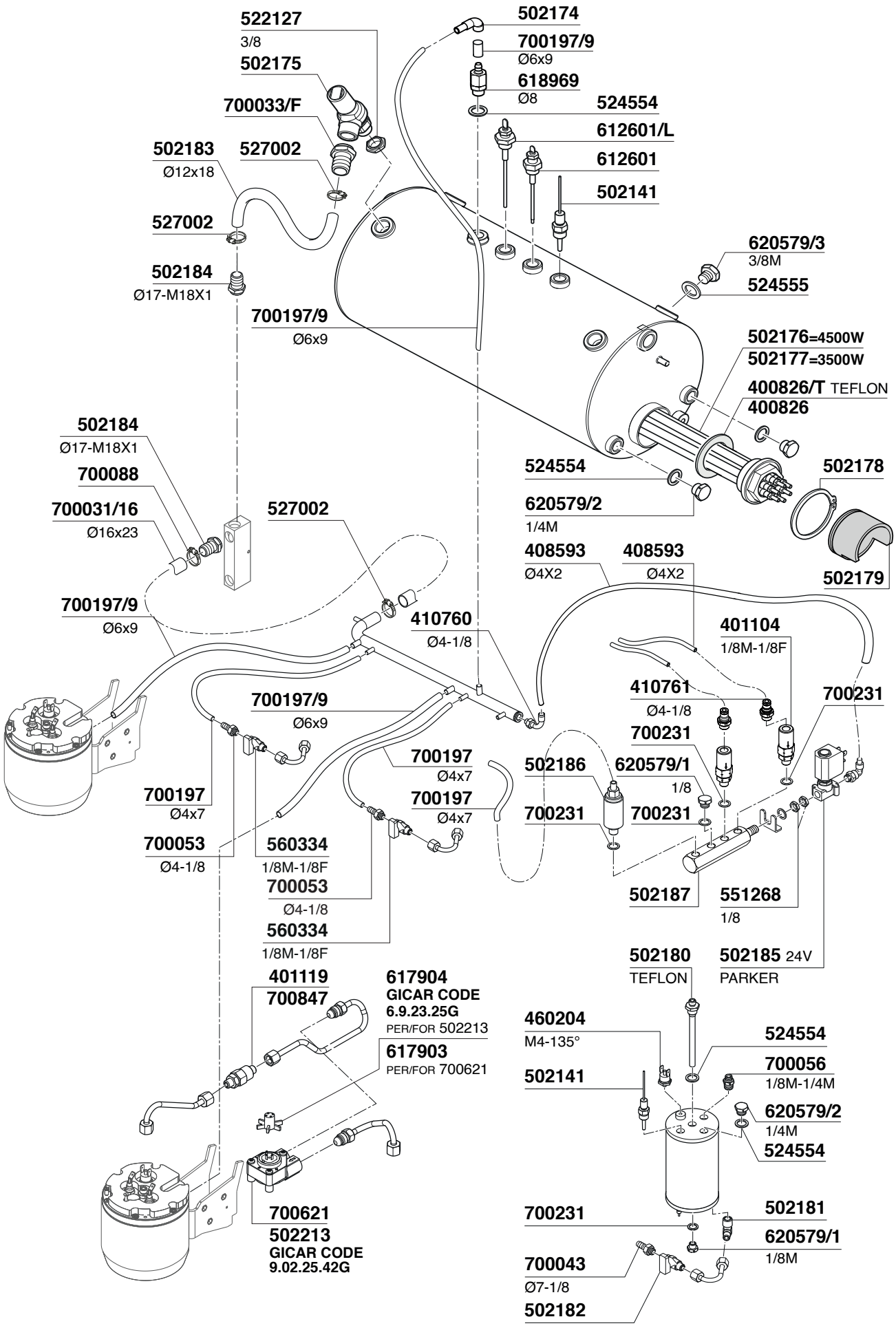

CAFE' RACER

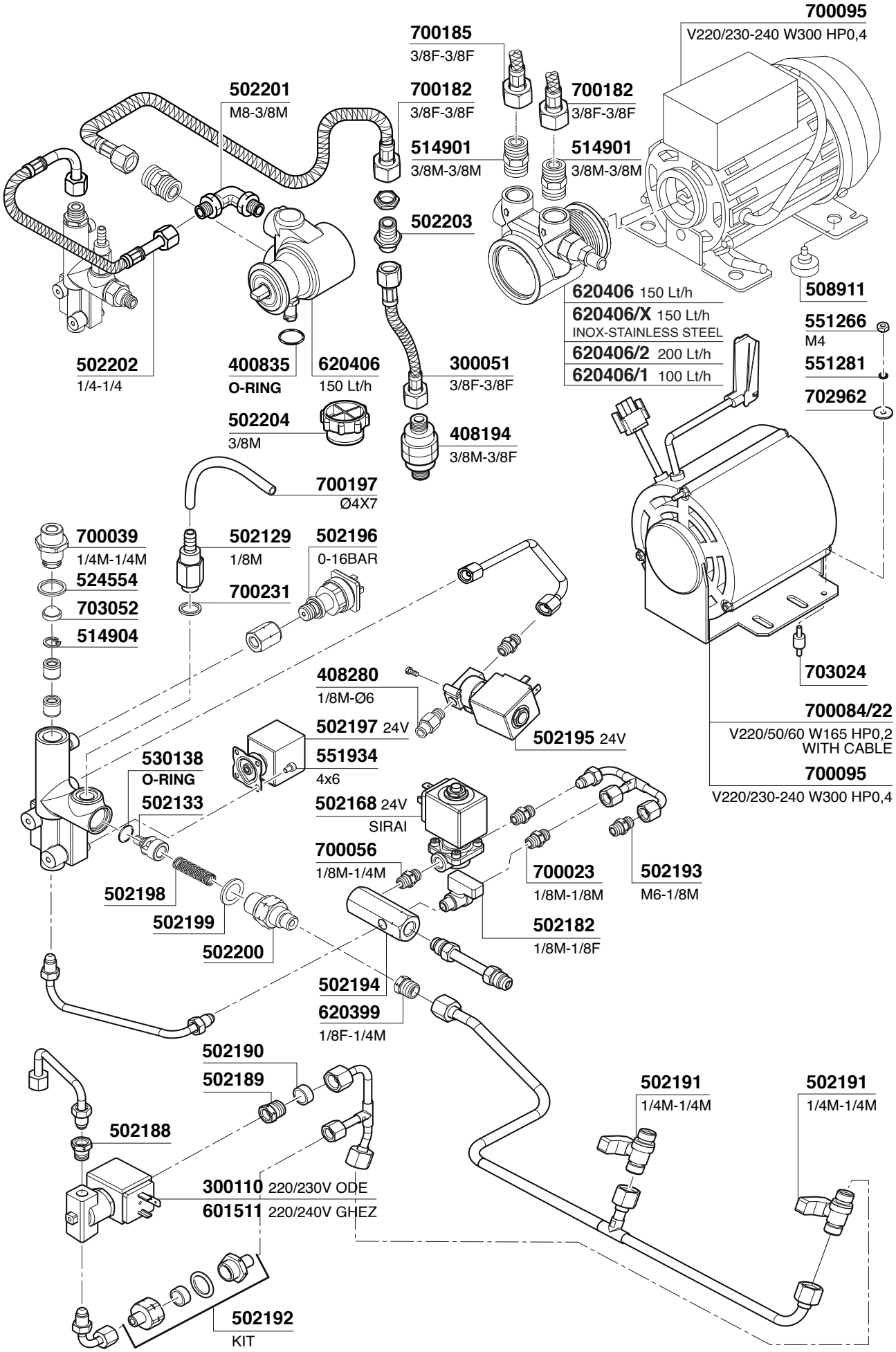
700095
V220/230-240 W300 HP0,4
700185
3/8F-3/8F
502201
M8-3/8M
700182
3/8F-3/8F
700182
3/8F-3/8F
514901
3/8M-3/8M
514901
3/8M-3/8M
502203
620406 150 Lt/h
620406/X 150 Lt/h
INOX-STAINLESS STEEL
620406/2 200 Lt/h
620406/1 100 Lt/h
508911
551266
M4
551281
702962
502202
1/4-1/4
400835
O-RING
620406
150 Lt/h
300051
3/8F-3/8F
502204
3/8M
408194
3/8M-3/8F
700197
Ø4X7
700039
1/4M-1/4M
502129
1/8M
502196
0-16BAR
524554
700231
703052
514904
408280
1/8M-Ø6
502197 24V
502195 24V
703024
700084/22
V220/50/60 W165 HP0,2
WITH CABLE
700095
V220/230-240 W300 HP0,4
530138
O-RING
551934
4x6
502133
502168 24V
SIRAI
700056
1/8M-1/4M
700023
1/8M-1/8M
502193
M6-1/8M
502198
502199
502200
502182
1/8M-1/8F
502194
620399
1/8F-1/4M
502190
502189
502191
1/4M-1/4M
502191
1/4M-1/4M
502188
300110 220/230V ODE
601511 220/240V GHEZ
502192
KIT

SANREMO

CAFE' RACER

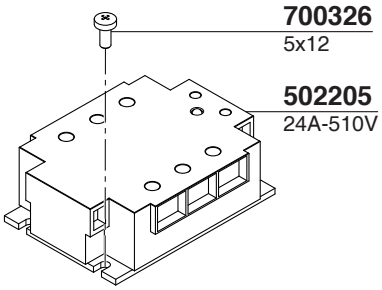

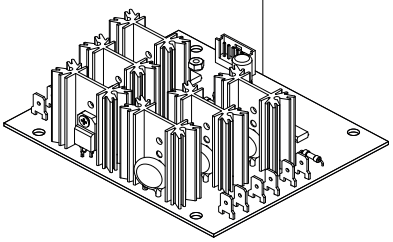

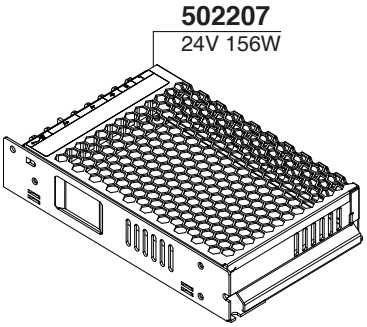

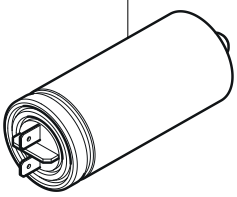

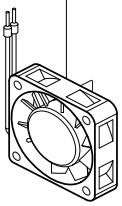

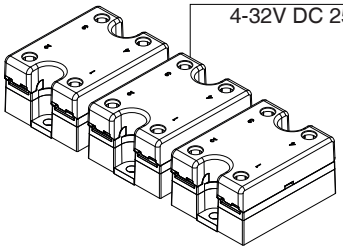

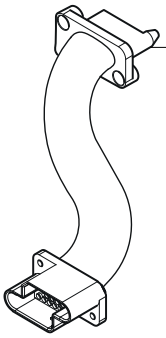

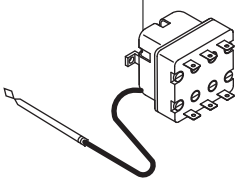

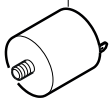

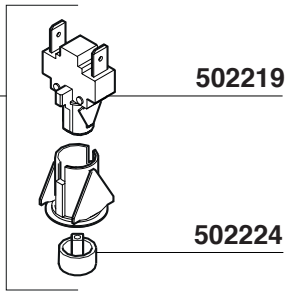

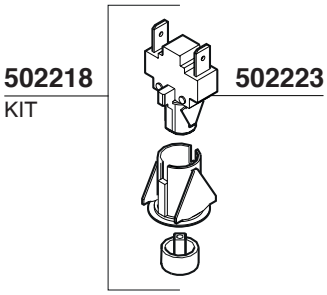

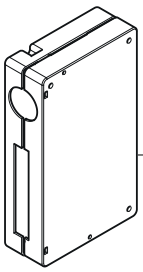

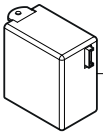

SIPRESSO

Tav. 01

615000 - 615001 - 615002
615003 - 615004 - 615005

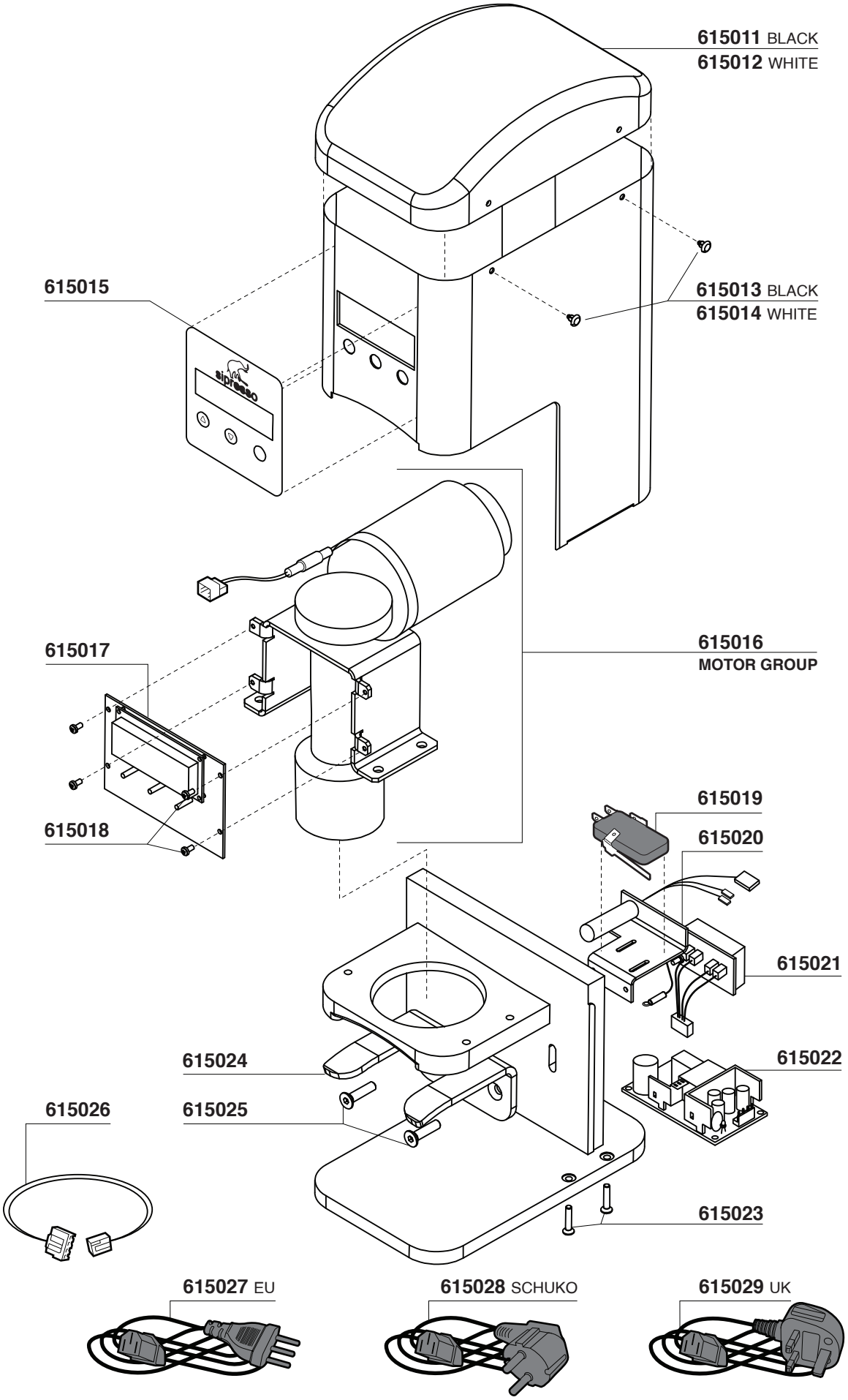

VIBIEMME

Tav. 01

CUBO - DOMOBAR - DOMOBAR JUNIOR DOMOBAR SUPER - REPLICA

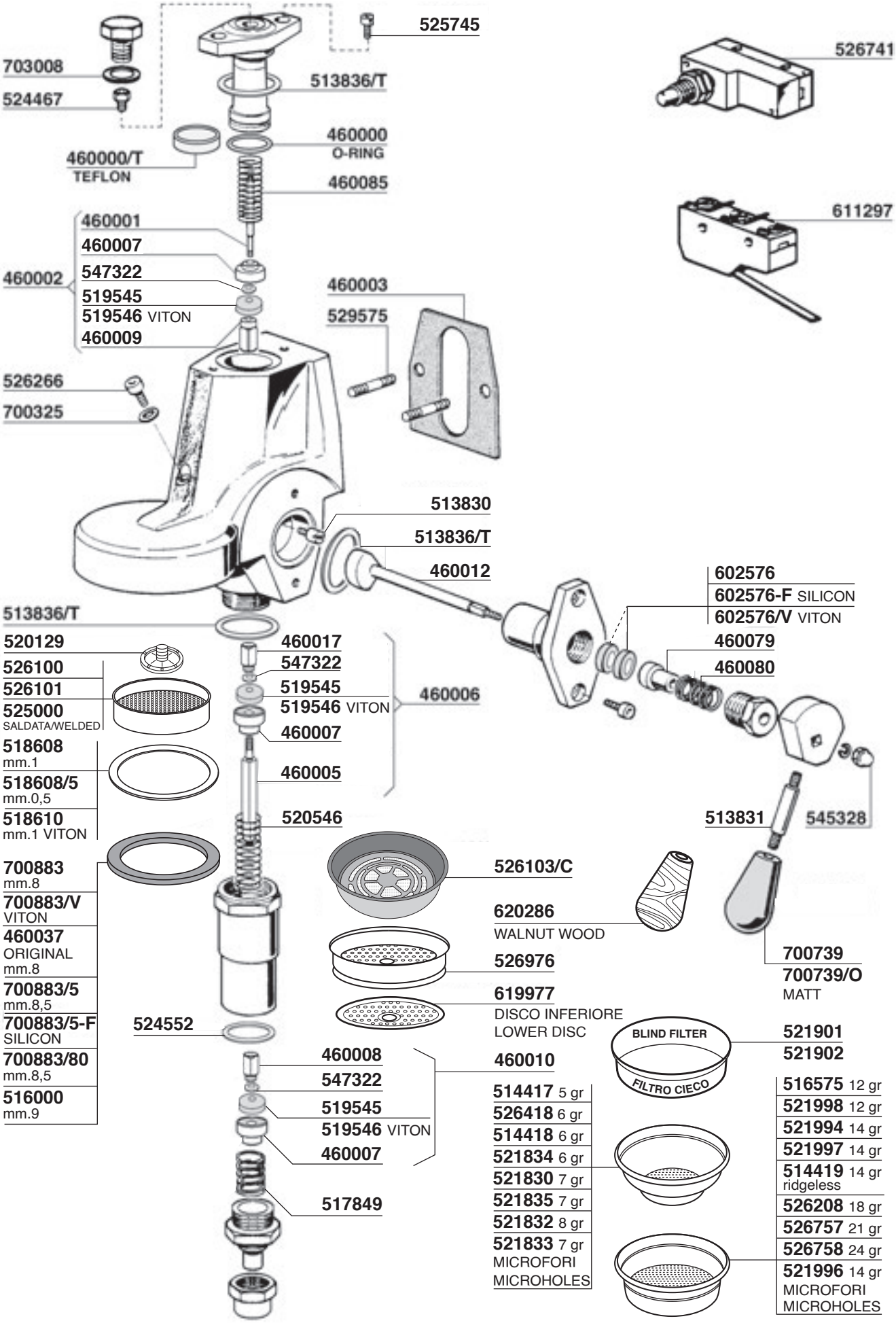

VIBIEMME

Tav. 02

CHIMAERA - CUBO - DOMOBAR SUPER - DOSAPLUS
MERCURY - REPLICA - REVOLUTION

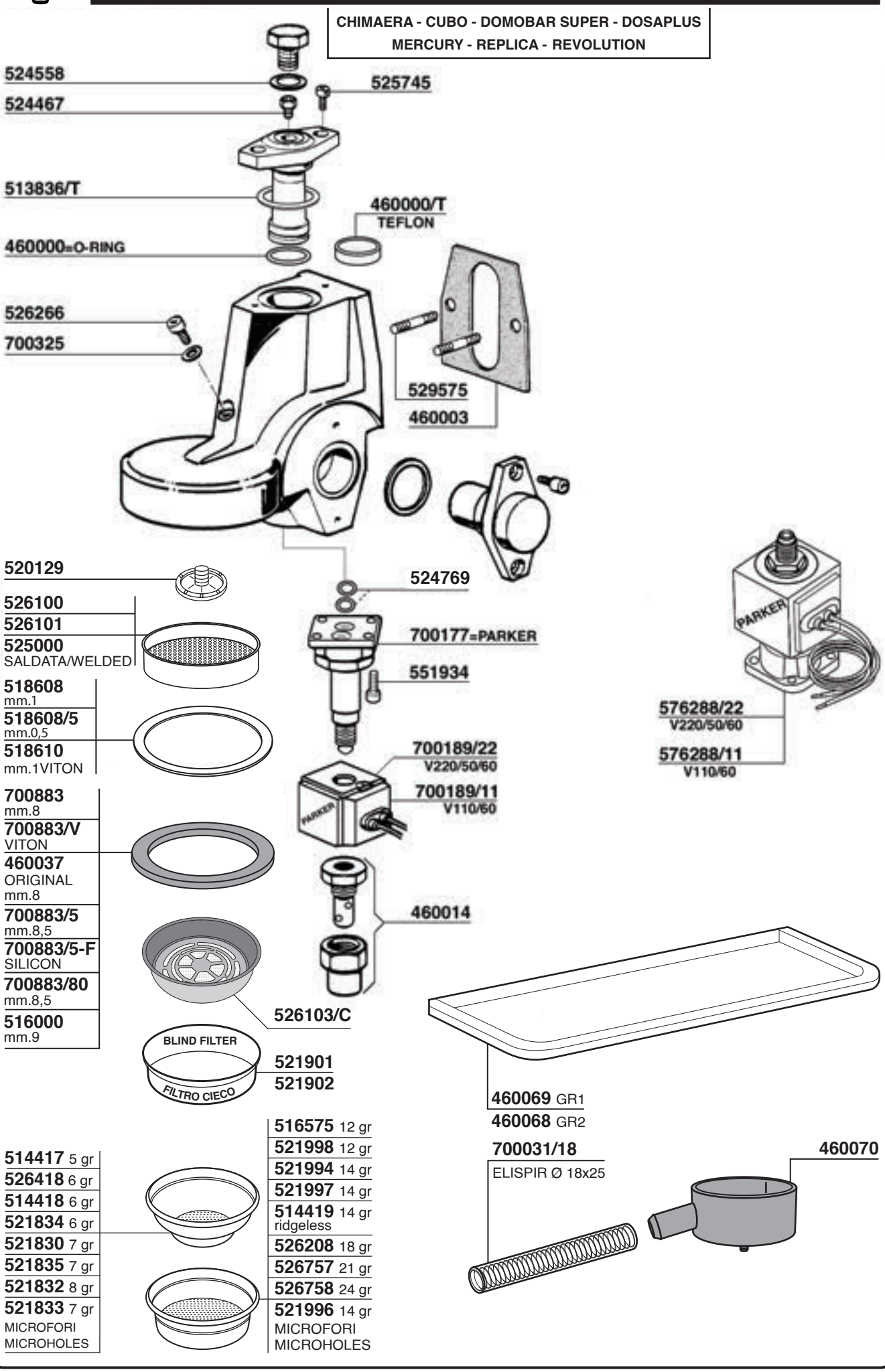

VIBIEMME

EVOLUTION - KOMETA - LOLLO
MINIMAX - SILVER

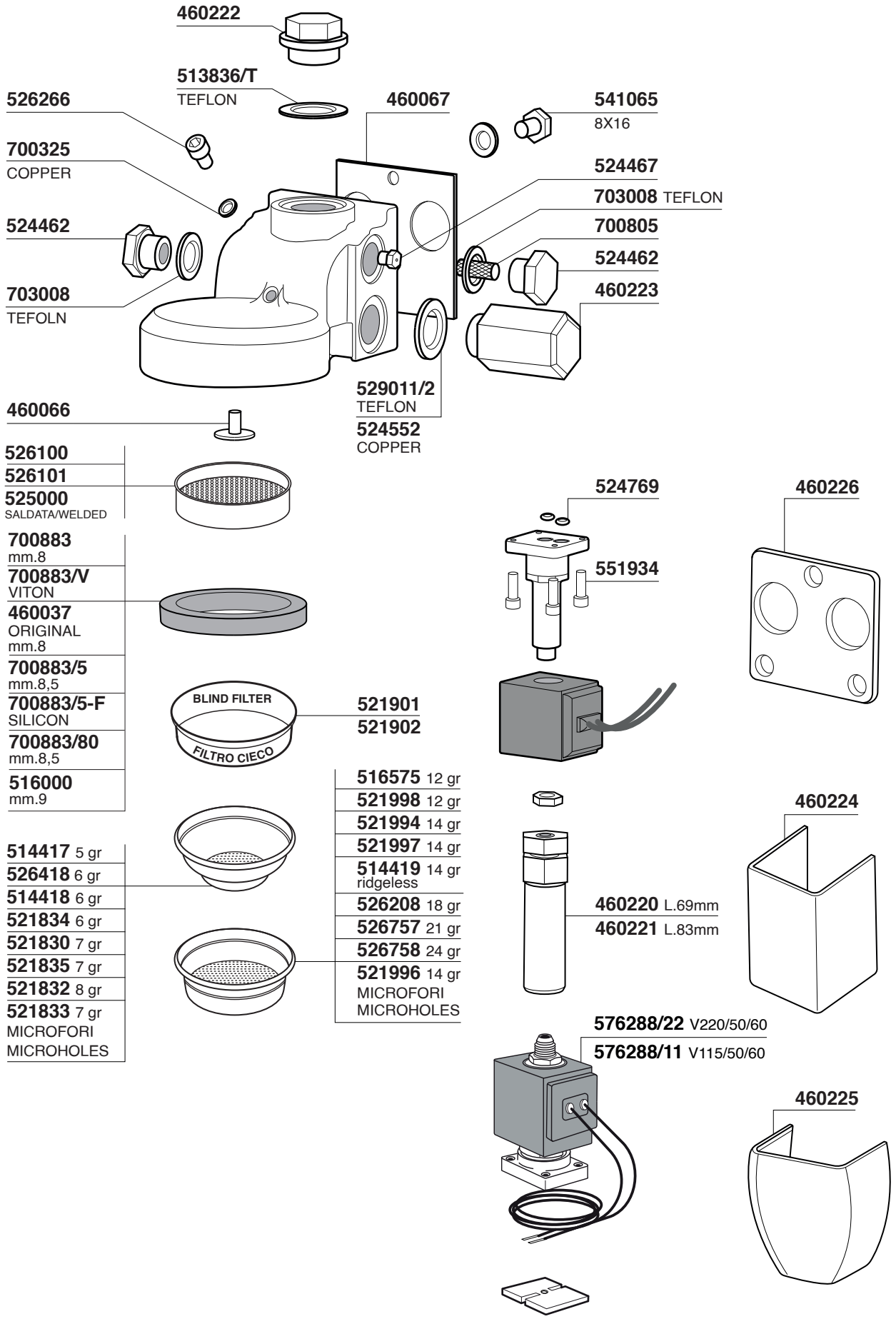

REPLICA LEVA

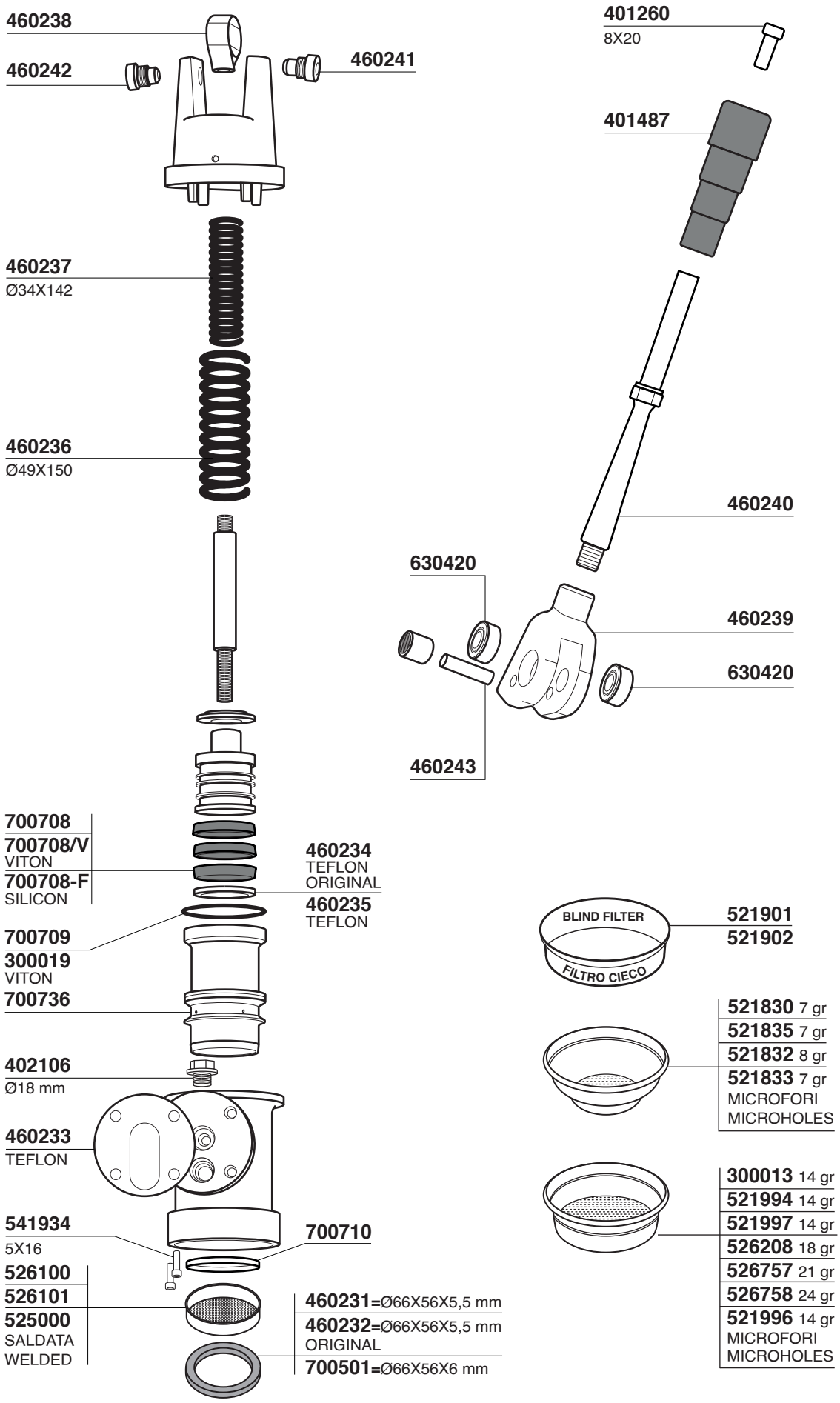

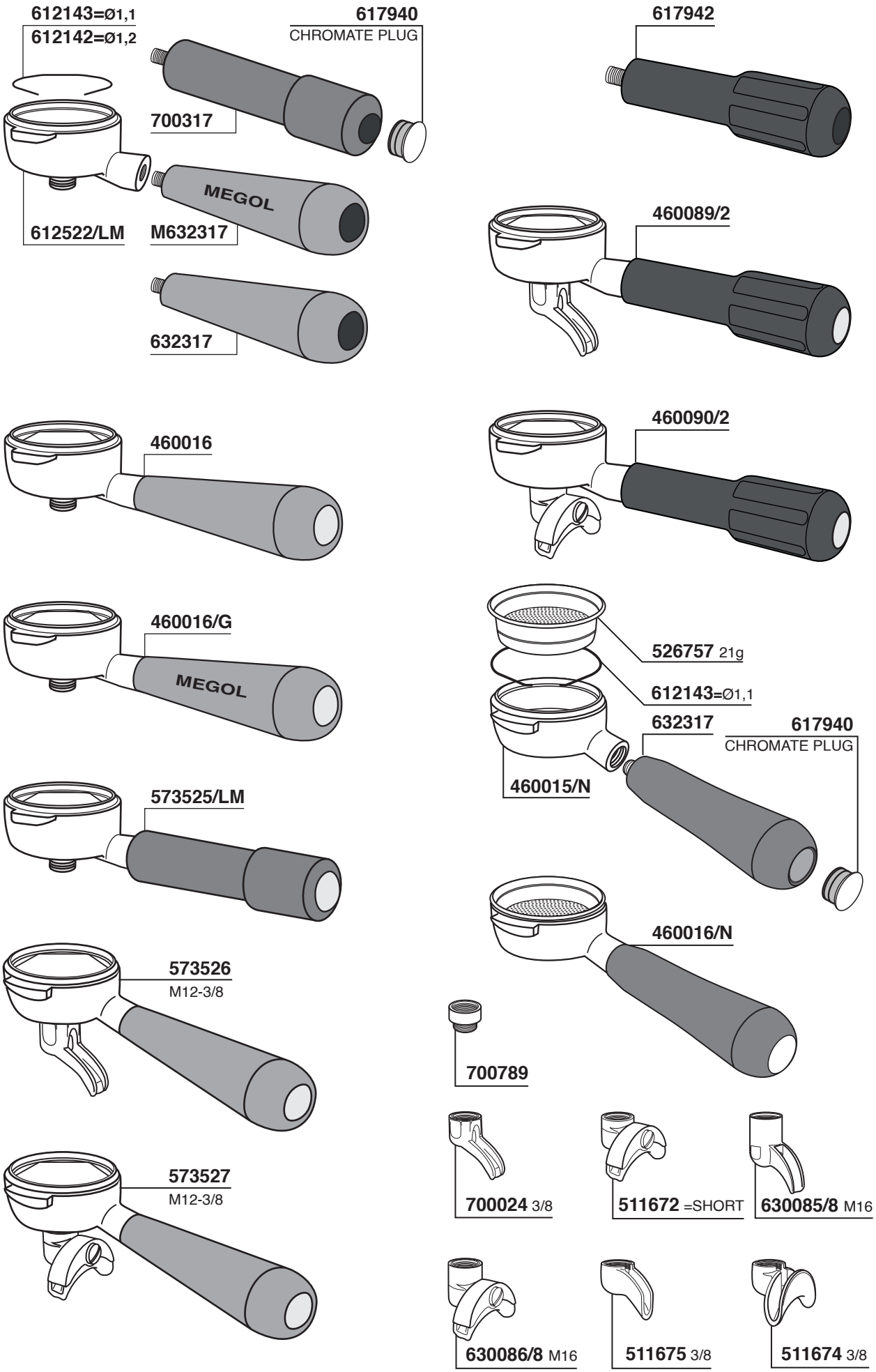
612143=Ø1,1
612142=Ø1,2
617940
CHROMATE PLUG
700317
MEGOL
612522/LM
M632317
632317
617942
460089/2
460016
460090/2
460016/G
MEGOL
526757 21g
612143=Ø1,1
632317
617940
CHROMATE PLUG
460015/N
573525/LM
460016/N
573526
M12-3/8
700789
573527
M12-3/8
700024 3/8
511672 =SHORT
630085/8 M16
630086/8 M16
511675 3/8
511674 3/8

624050/A
ACERO / MAPLE
624050/N
NOCE / WALNUT
624050/U
ULIVO / OLIVE

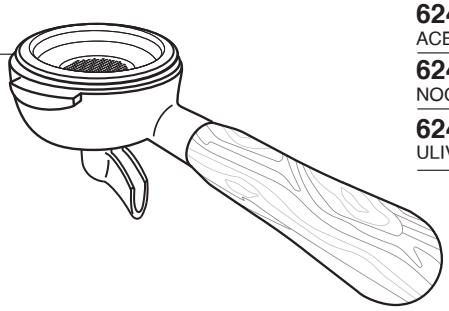

624051/A
ACERO / MAPLE
624051/N
NOCE / WALNUT
624051/U
ULIVO / OLIVE

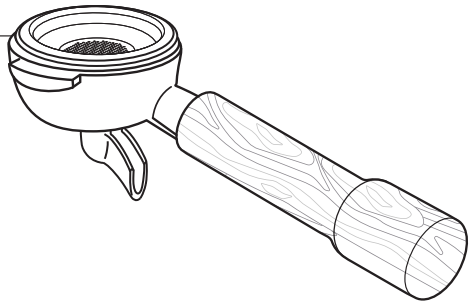

624000/A
ACERO / MAPLE
624000/N
NOCE / WALNUT
624000/U
ULIVO / OLIVE

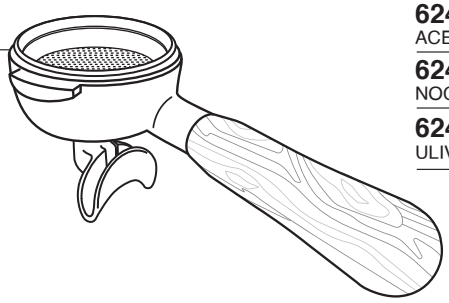

624001/A
ACERO / MAPLE
624001/N
NOCE / WALNUT
624001/U
ULIVO / OLIVE

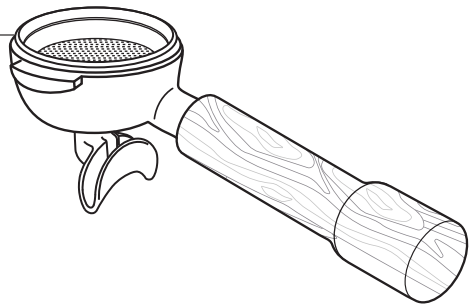

626000/A
ACERO / MAPLE
626000/N
NOCE / WALNUT
626000/U
ULIVO / OLIVE

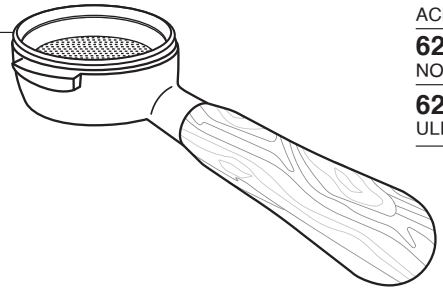

626001/A
ACERO / MAPLE
626001/N
NOCE / WALNUT
626001/U
ULIVO / OLIVE

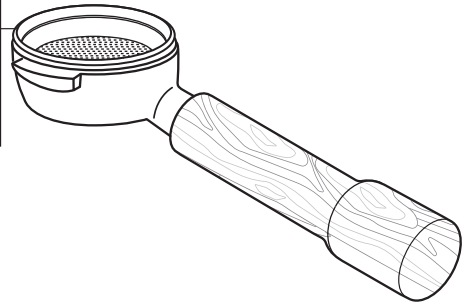

620652
FILTER 42g

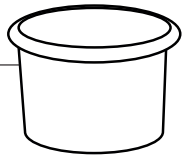

620652
FILTER 42g

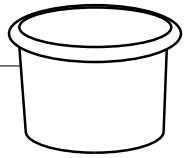

620651

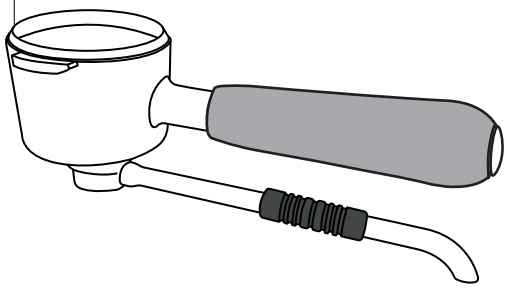

620651/N
BOTTOMLESS FILTER

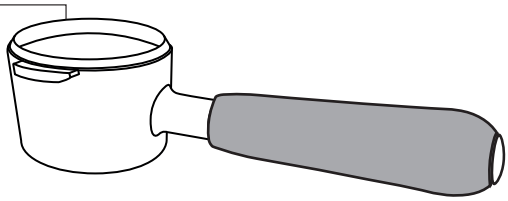

LOLLO

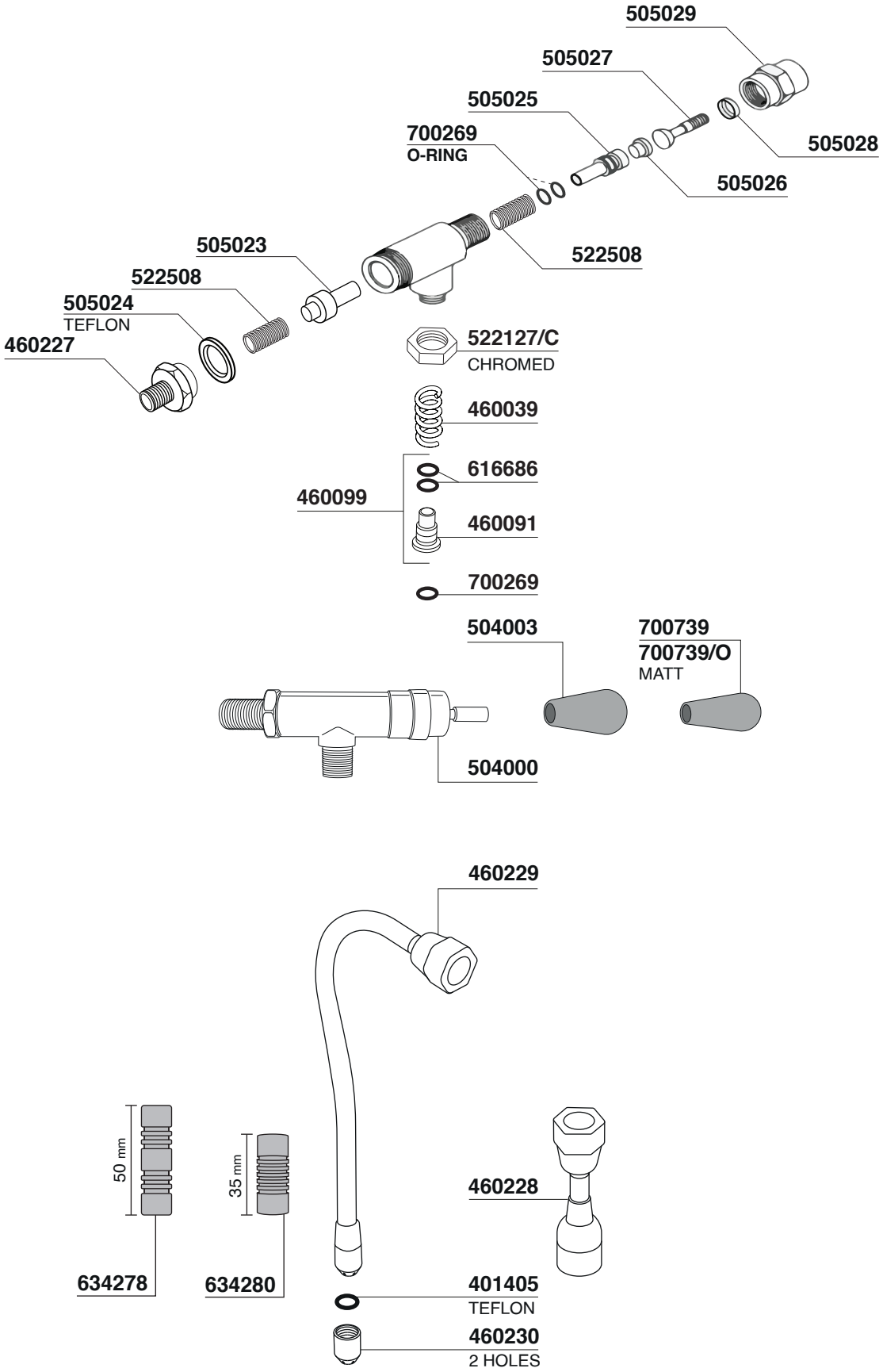
505029
505027
505025
700269
O-RING
505028
505026
522508
505023
522508
505024
TEFLON
460227
522127/C
CHROMED
460039
616686
460099
460091
700269
504003
700739
700739/O
MATT
504000
460229
50 mm
35 mm
460228
634278
634280
401405
TEFLON
460230
2 HOLES

CHIMAERA - CUBO - REPLICA - REPLICA LEVA

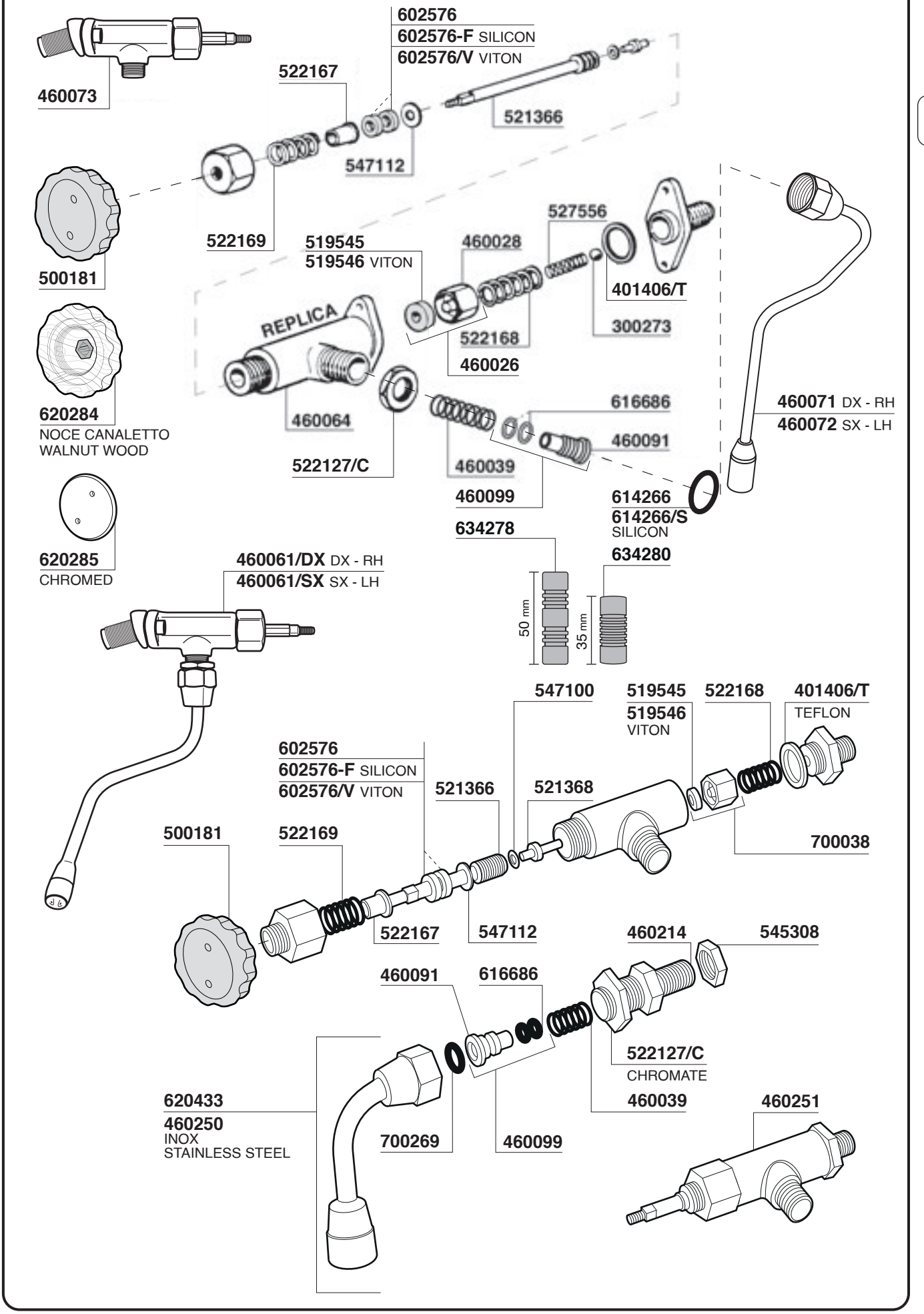

MERCURY

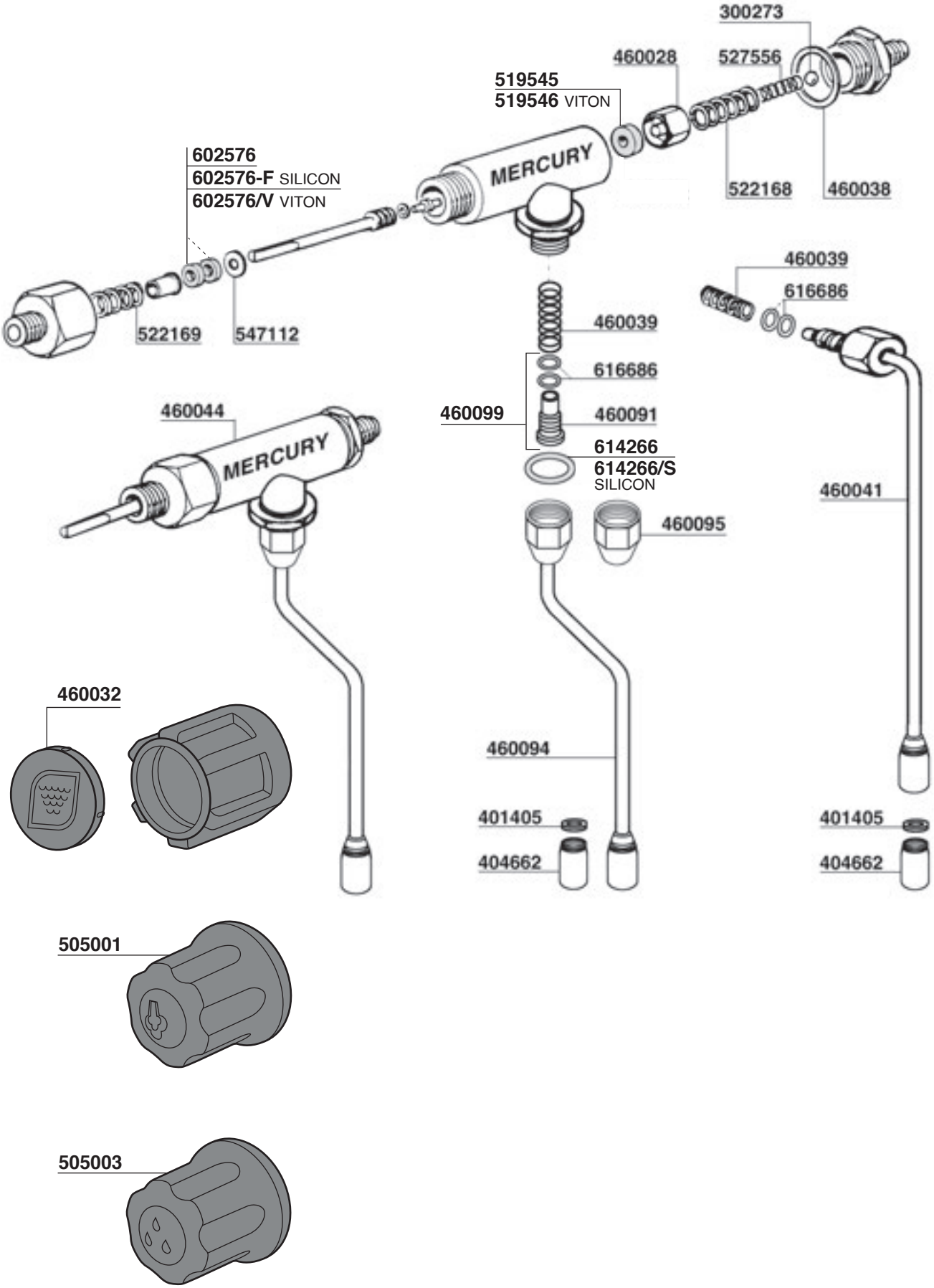
300273
460028
527556
519545
519546 VITON
602576
602576-F SILICON
602576/V VITON
MERCURY
522168
460038
460039
616686
522169
547112
460039
616686
460044
460099
460091
MERCURY
614266
614266/S
SILICON
460041
460095
460032
460094
401405
404662
401405
404662
505001
505003

VIBIEMME

Tav. 10

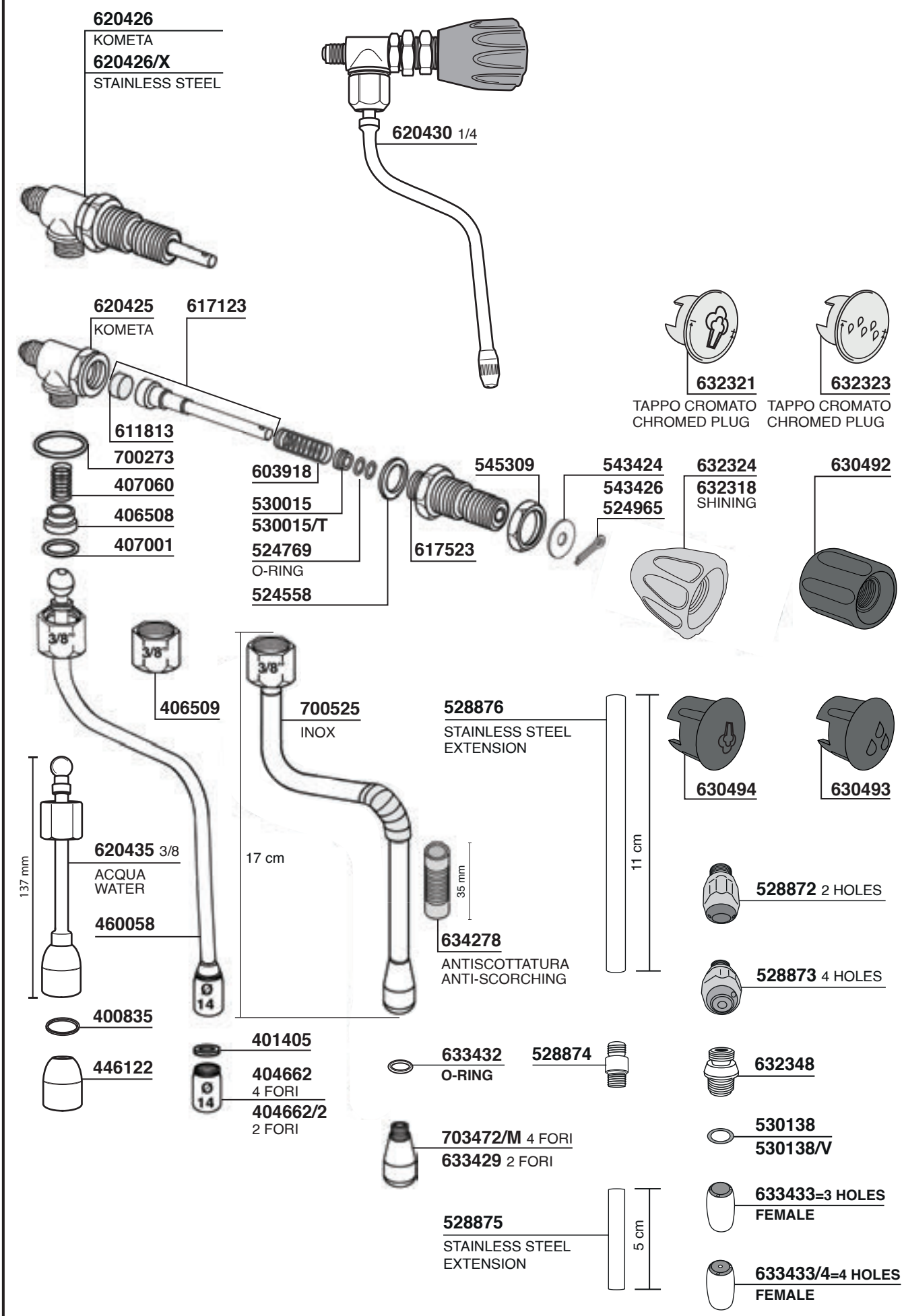

VIBIEMME

CHIMAERA - EVOLUTION - LOLLO - REPLICA
REPLICA LEVA - REVOLUTION

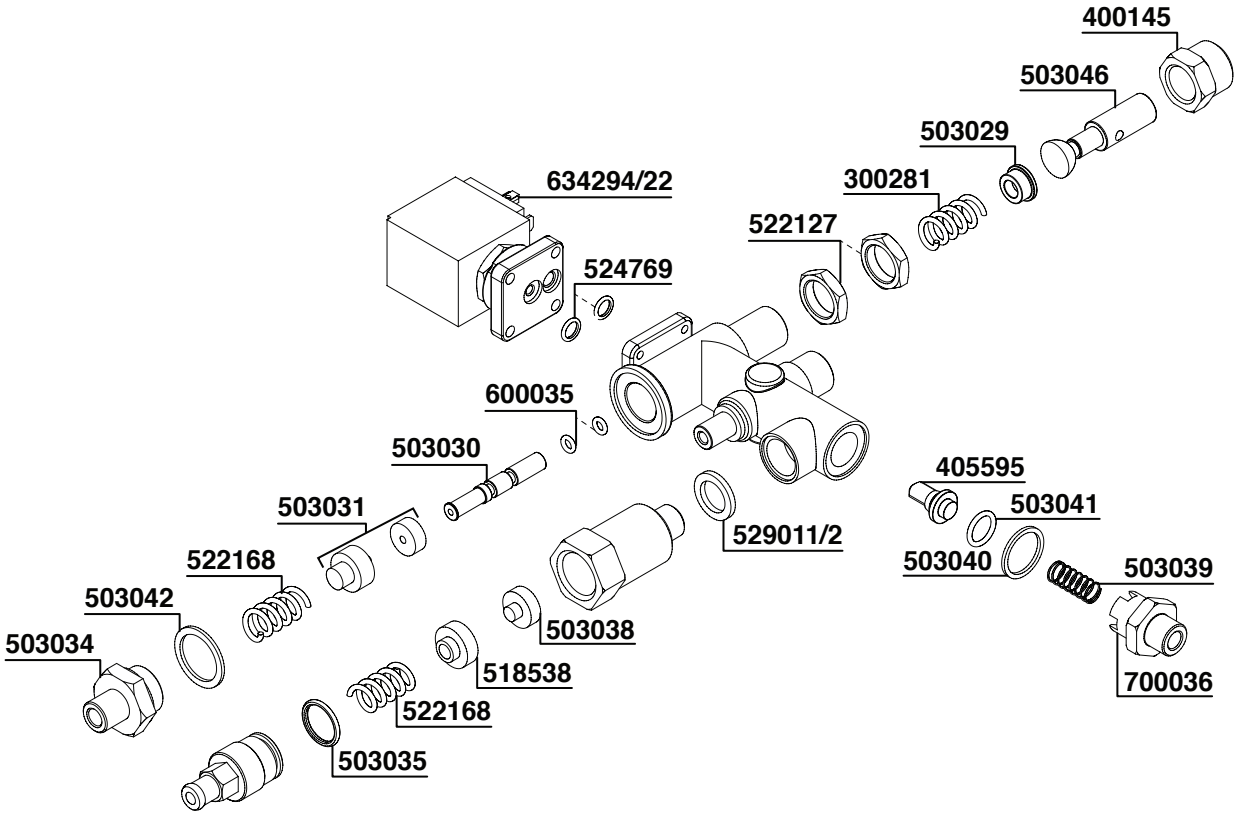

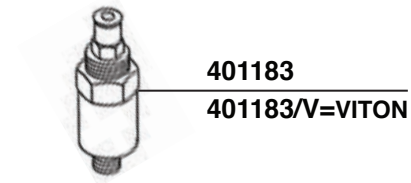

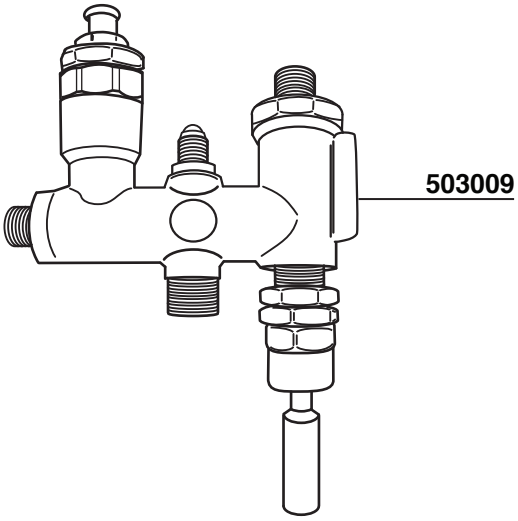

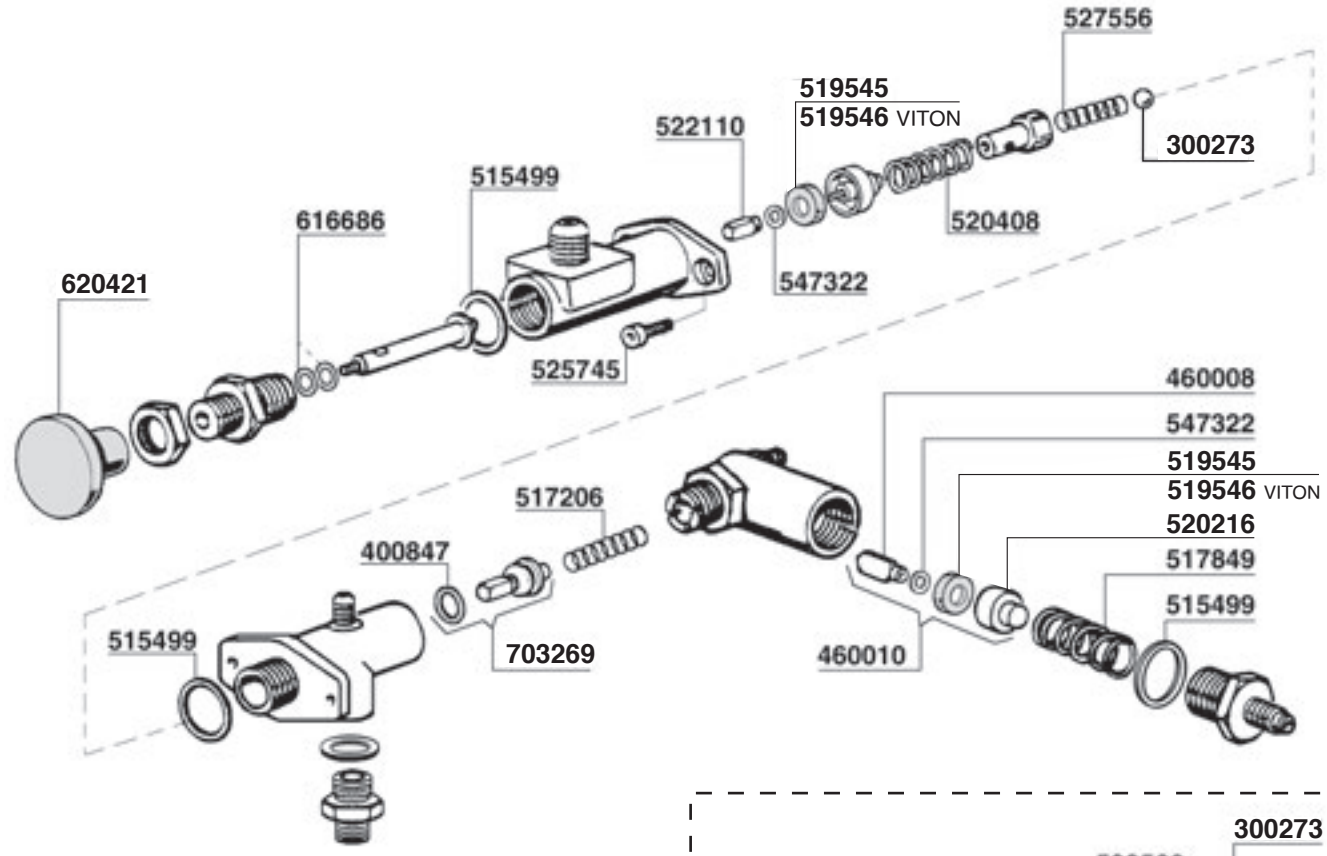

CUBO - DOSAPLUS - MINIMAX
REPLICA

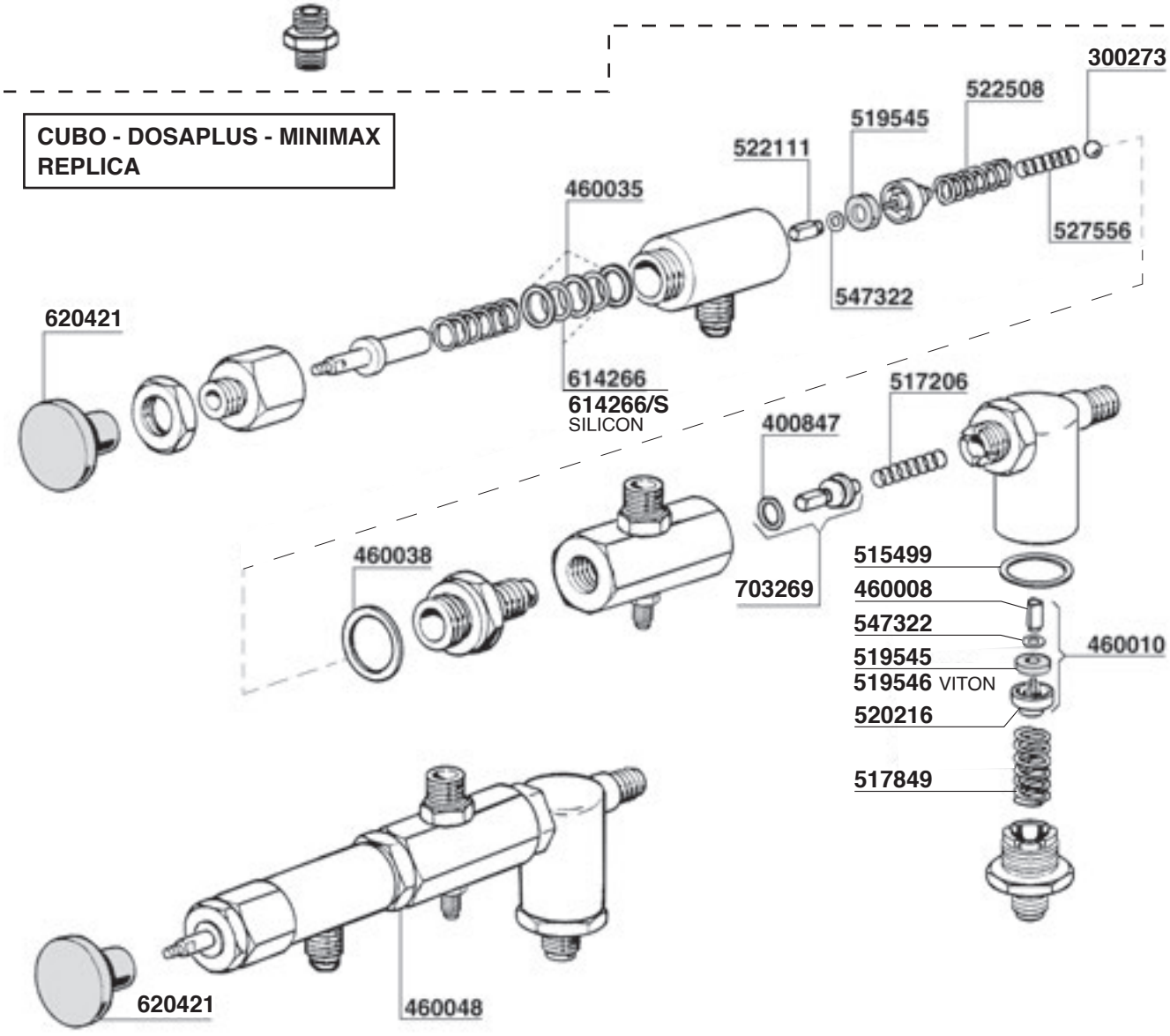

VIBIEMME

Tav. 13

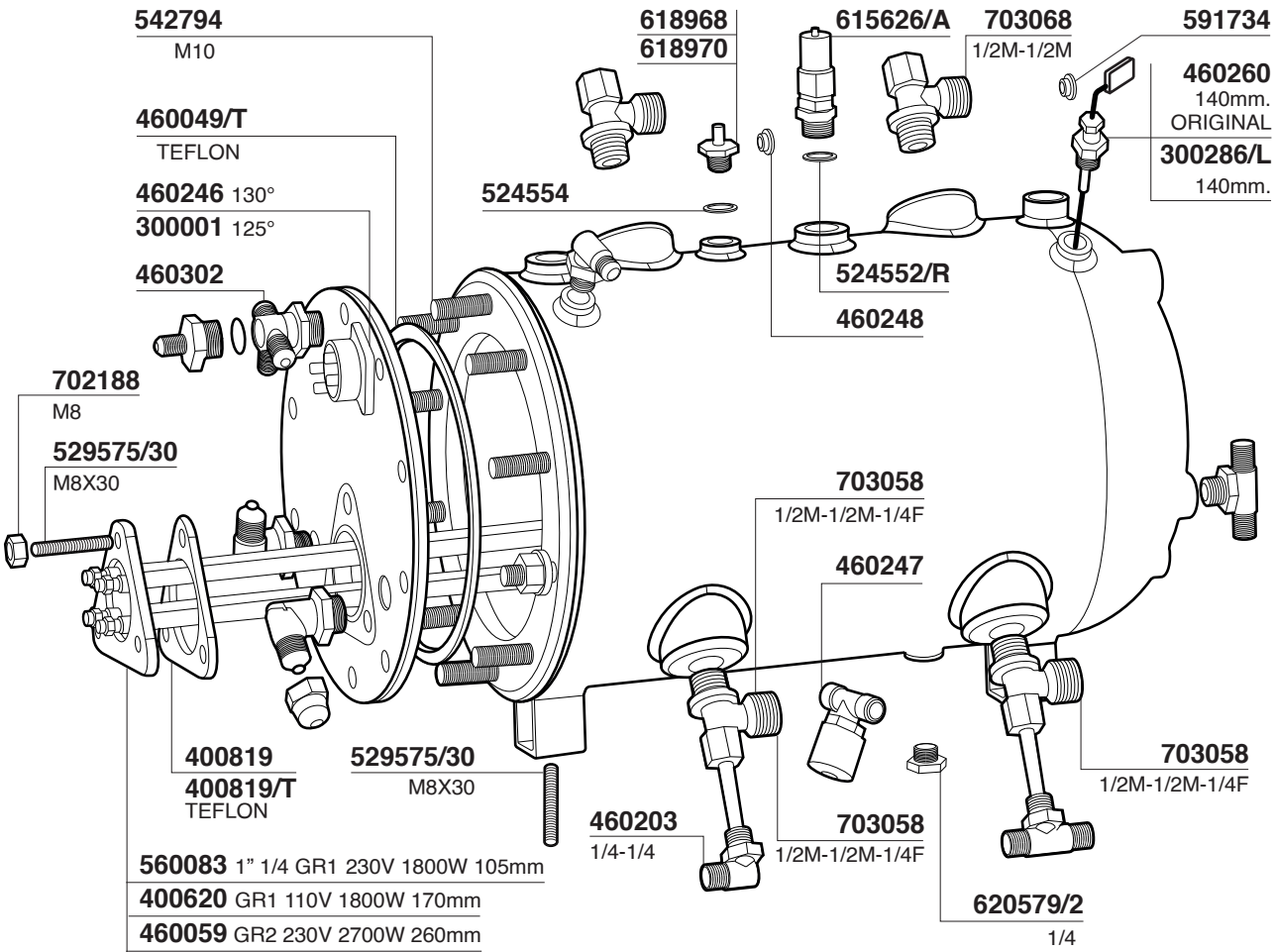

560083 1" 1/4 GR1 230V 1800W 105mm
400620 GR1 110V 1800W 170mm
460059 GR2 230V 2700W 260mm
400621 GR2 110V 3000W 345mm
400615 GR2 220V 3000W 330mm
400615/38 GR2 380/400V 3000W 360mm
401834 GR2 220V 3500W 330mm
460245 GR2 220/400V 4500W
460244 GR2 230V 4000W
404580 GR2 230/400V 4500W 330mm
400616/38 GR3 400V 3700W 450mm
400616 GR3 220V 4000W 455mm
400617 GR3/4 230V 5000W 450mm

700464
700464/S

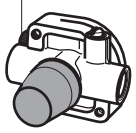

620579/2
1/4
460053

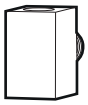

700269
460054
400089

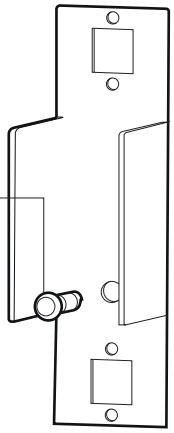

460249
RED
460055
460056

400089
460054
700269

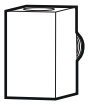

700858/11 = 1"1/4 GR1 110V 1500W 135mm
700858/22 = 1"1/4 GR1 220V 1500W 135mm

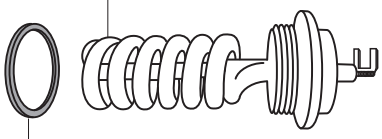

460303
GR3 230V 200W

400826/T
Ø54x42x3mm
400826
Ø54x42x3mm
400827
Ø52,7x41,6x2mm

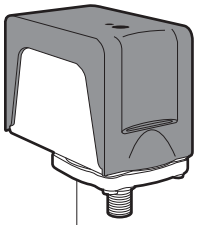

616597 CE/UL

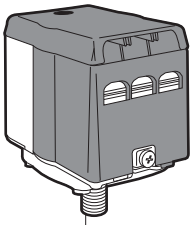

616592 20 AMP

417566

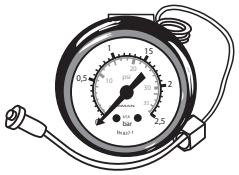

DOMOBAR SUPER

417567

DOMOBAR SUPER

700701

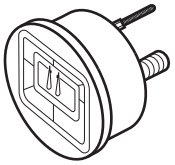

EVOLUTION
REVOLUTION

460050

MERCURY
MINIMAX

560077

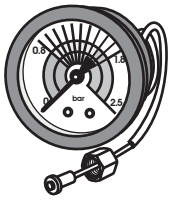

560078

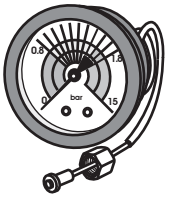

460252

DOMOBAR JUNIOR
DOMOBAR SUPER
LOLLO

460253

DOMOBAR JUNIOR
DOMOBAR SUPER
LOLLO

460254

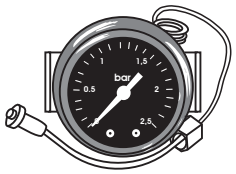

CHIMAERA - EVOLUTION
LOLLO - REPLICA
REVOLUTION

460255

CHIMAERA - EVOLUTION
LOLLO - REPLICA
REVOLUTION

700595/T

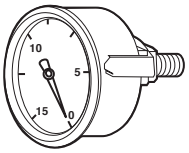

DOMOBAR

700250
1/8F-1/8F

460036
RUBBER

460208
SILICON

37 cm

700197/8
5x8

SILICON

700692

460201

460202

620562

460200
1/8M-1/8F

617162

620413

617162

617160/11 ULKA 120V 60Hz 41W

617160/22 ULKA 220V 50/60Hz 48W

621111 6,3 μF

621216 8 μF

700086/22
V220/50/60 W150 HP0,2

621347
CAPACITOR
CONDENSAT.
10 μF

185 mm

CAPACITOR

RPM MOTOR

165 mm

130 mm

700050

514901

110 mm

CAPACITOR

RPM MOTOR

150 mm

125 mm

400786

700084/22
V220/50/60 W165
HP0,2 WITH CABLE

620406 150Lt/h
620406/2 200Lt/h
620406/1 100Lt/h

MOTORE PICCOLO - SMALL MOTOR

700047 50 Lt/h
MINIPOMPA

VIBIEMME

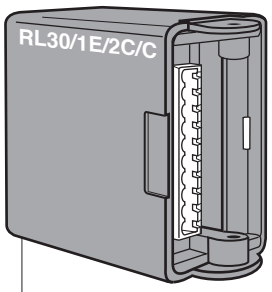

460062 220V
GICAR CODE 9.1.40.12G
460062/11 110V
GICAR CODE 9.1.40.27G

620709/10
CONNETTORE 10 PIN

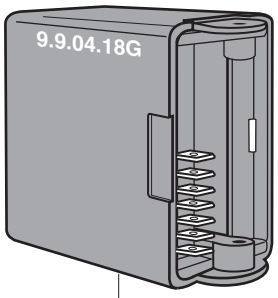

460029 GR2/3 DE LUX
GICAR CODE 9.9.04.18G

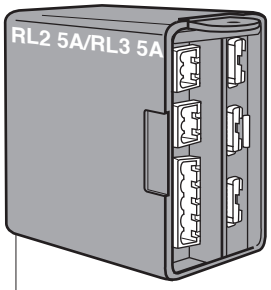

460075 GR1 220V KOMETA
GICAR CODE 9.1.23.10G

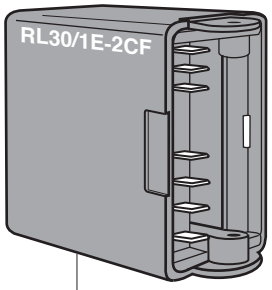

700737 220V
GICAR CODE 9.1.40.71G
700737/11 110V
GICAR CODE 9.1.40.70G

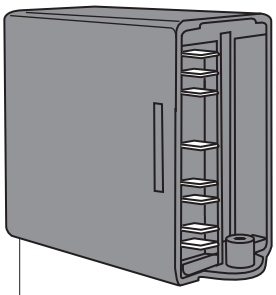

460305 240V
GICAR CODE 9.9.06.39G
460306 110V
GICAR CODE 9.9.06.78G

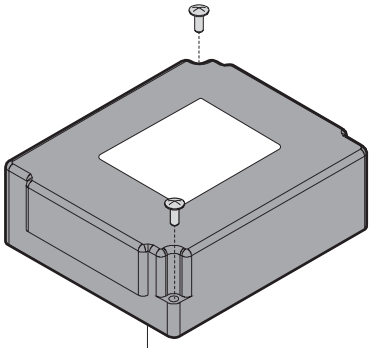

460259 230V LOLLO
GICAR CODE 9.5.22.68G06

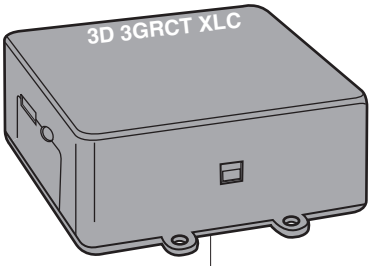

460096 GR1/2/3 240V
GICAR CODE 9.5.15.28G 00

460297 220V DOMOBAR JUNIOR DIGITALE
460298 110V DOMOBAR JUNIOR DIGITALE
460304 230V DOMOBAR JUNIOR/SUPER ANALOGICA
460274 230V DOMOBAR DIGITALE

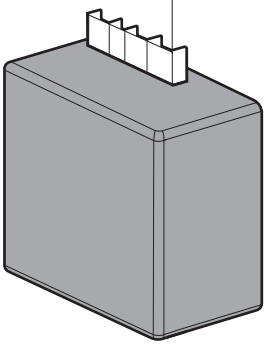

460256
GR/2/3 240V 50/60Hz

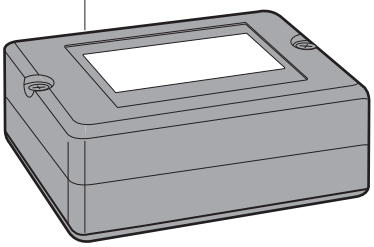

620714
8 pin 800 mm

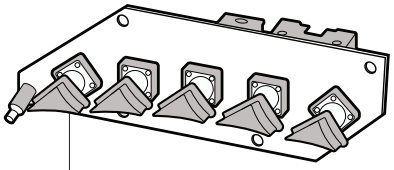

460219
EVOLUTION - REVOLUTION

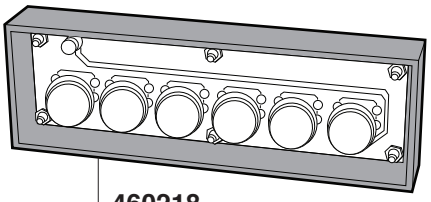

460218
CUBO REPLICA

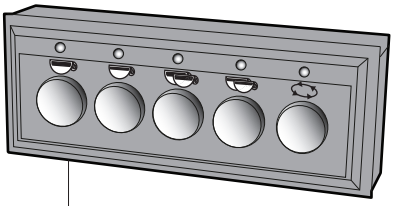

460217
DOSAPLUS

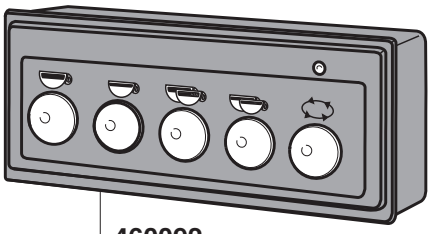

460092
PULSANTIERA - TOUCH PAD

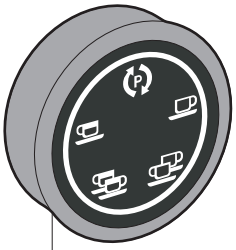

460257
LOLLO

460258
LOLLO

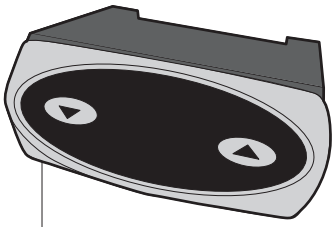

460312
DOMOBAR SUPER

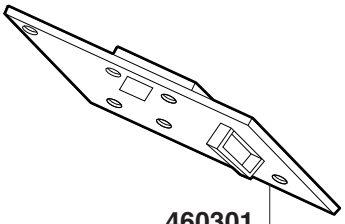

460301
DOMOBAR JUNIOR DIGITALE
460277
DOMOBAR DIGITALE DISPLAY

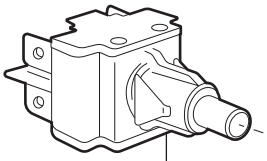

413706

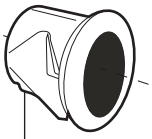

413707

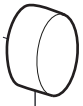

413708

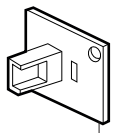

460278
RED

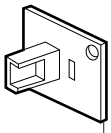

460279
YELLOW

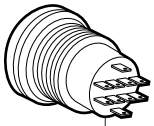

460275

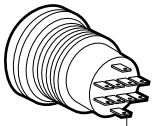

460280

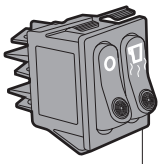

460264

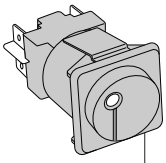

630381

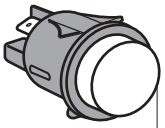

618010
RED
618010/V
GREEN

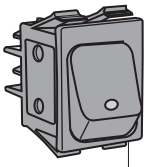

579671
BLACK

VIBIEMME

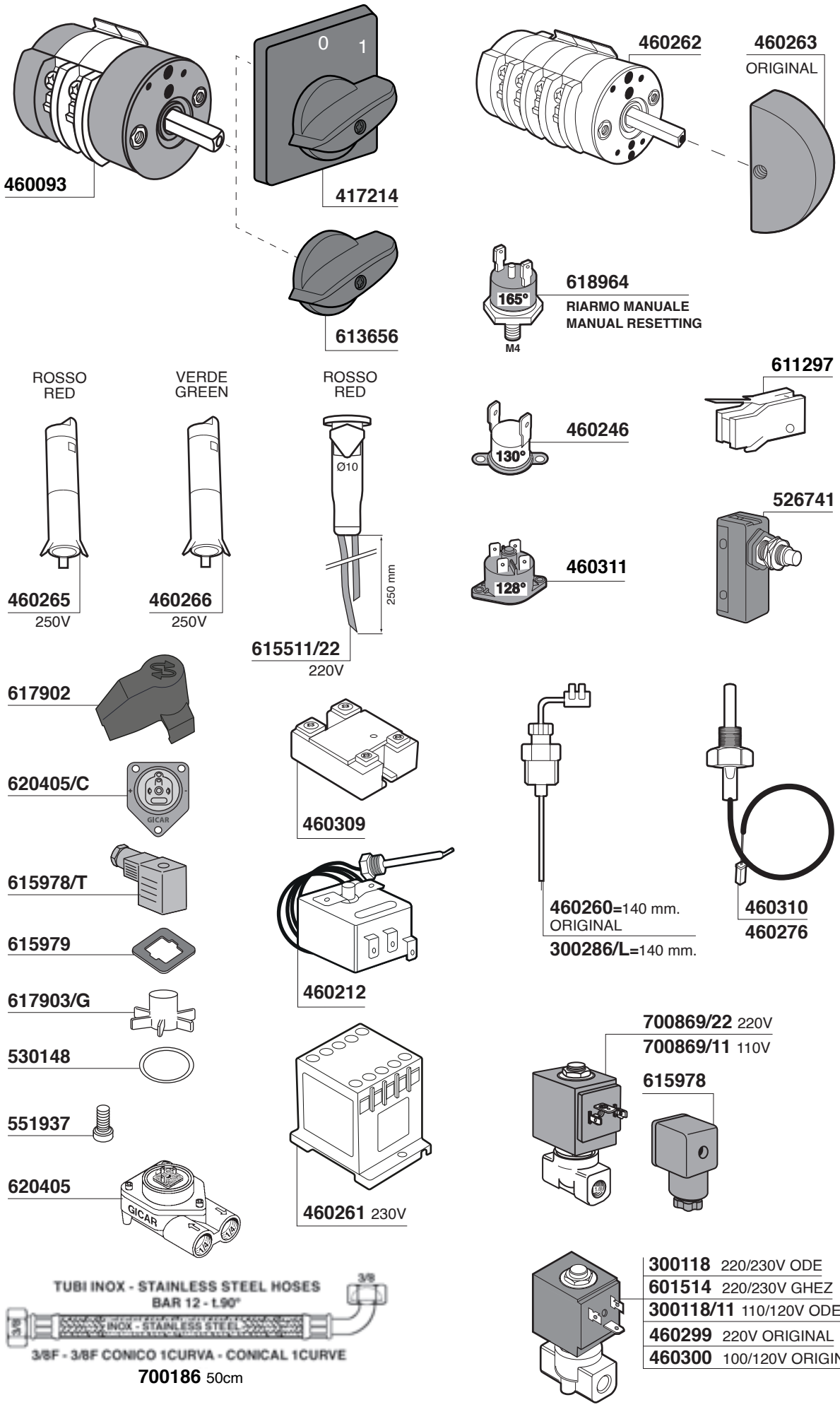
460093
0
1
417214
613656
460262
460263
ORIGINAL
165°
M4
618964
RIARMO MANUALE
MANUAL RESETTING
611297
ROSSO
RED
VERDE
GREEN
ROSSO
RED
130°
460246
526741
128°
460311
Ø10
250 mm
460265
250V
460266
250V
615511/22
220V
617902
620405/C
GICAR
460309
615978/T
615979
617903/G
530148
551937
620405
GICAR
460212
460260=140 mm.
ORIGINAL
300286/L=140 mm.
460310
460276
700869/22 220V
700869/11 110V
615978
460261 230V
TUBI INOX - STAINLESS STEEL HOSES
BAR 12 - L.90°
3/8
INOX - STAINLESS STEEL
3/8F - 3/8F CONICO 1CURVA - CONICAL 1CURVE
700186 50cm
300118 220/230V ODE
601514 220/230V GHEZ
300118/11 110/120V ODE
460299 220V ORIGINAL
460300 100/120V ORIGINAL

DOMOBAR

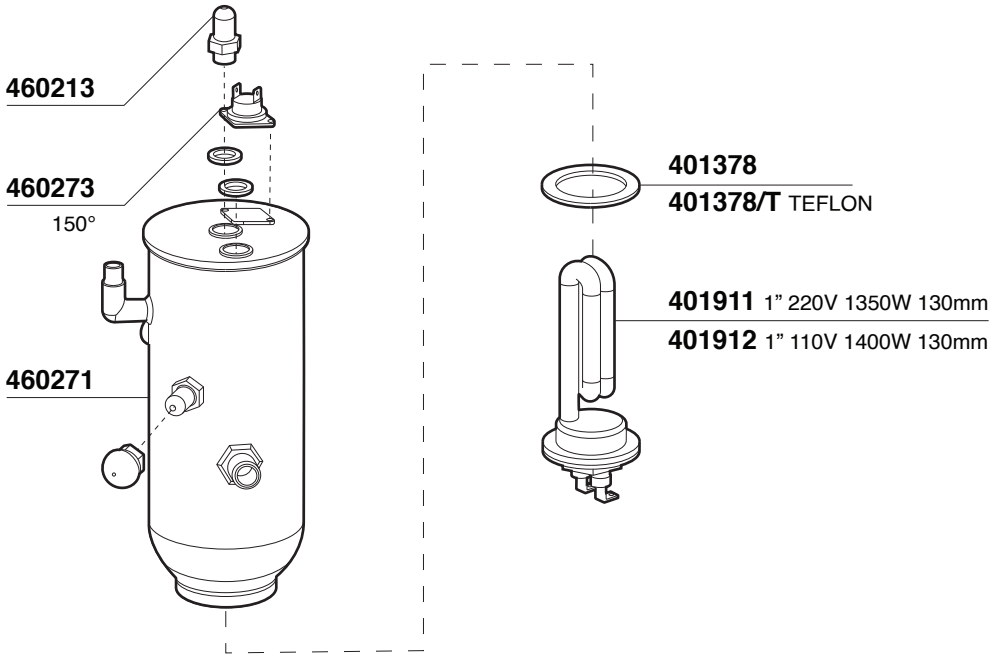

DOMOBAR JUNIOR DIGITALE/ANALOGICA

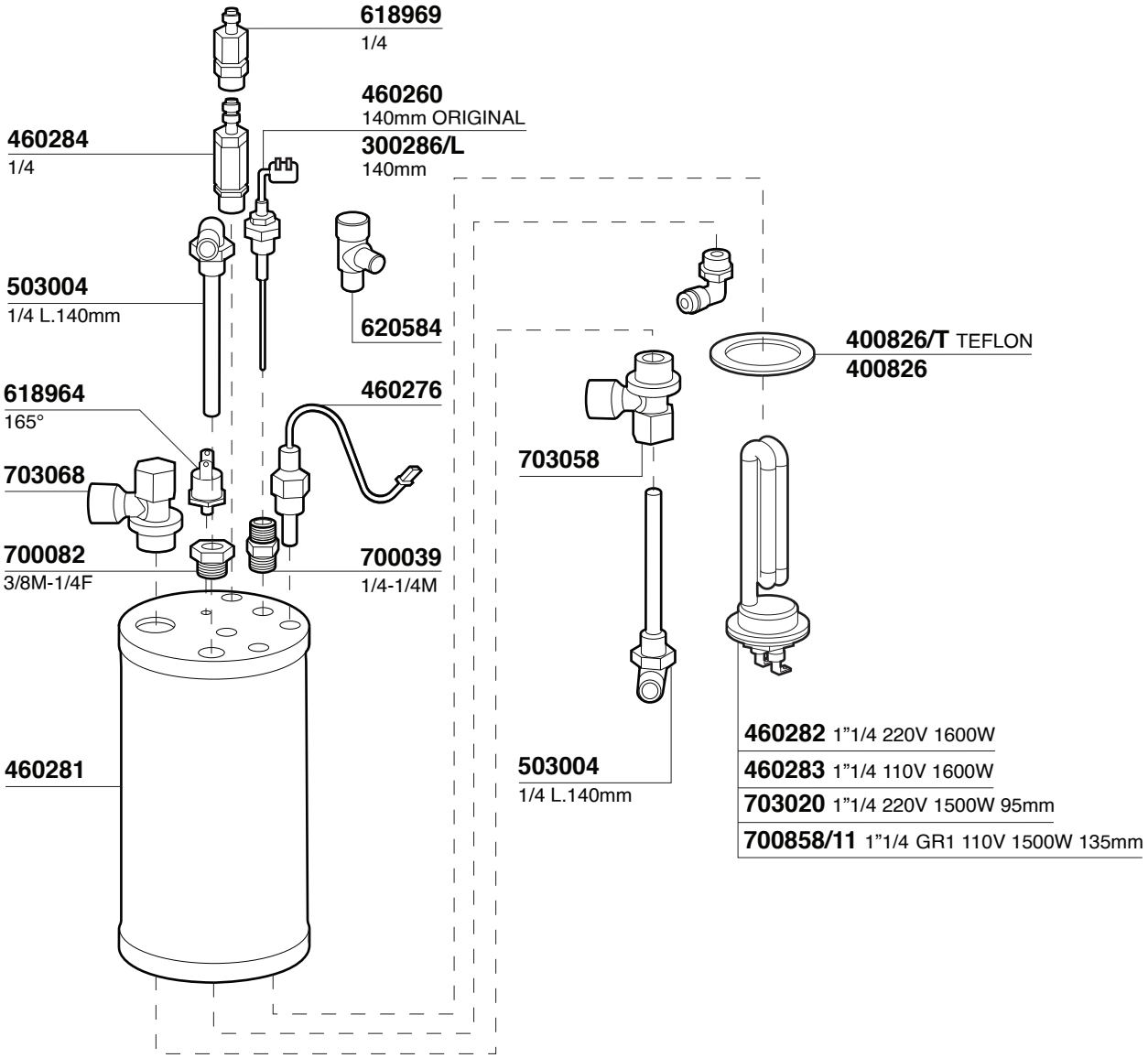

DOMOBAR JUNIOR DIGITALE/ANALOGICA 2B

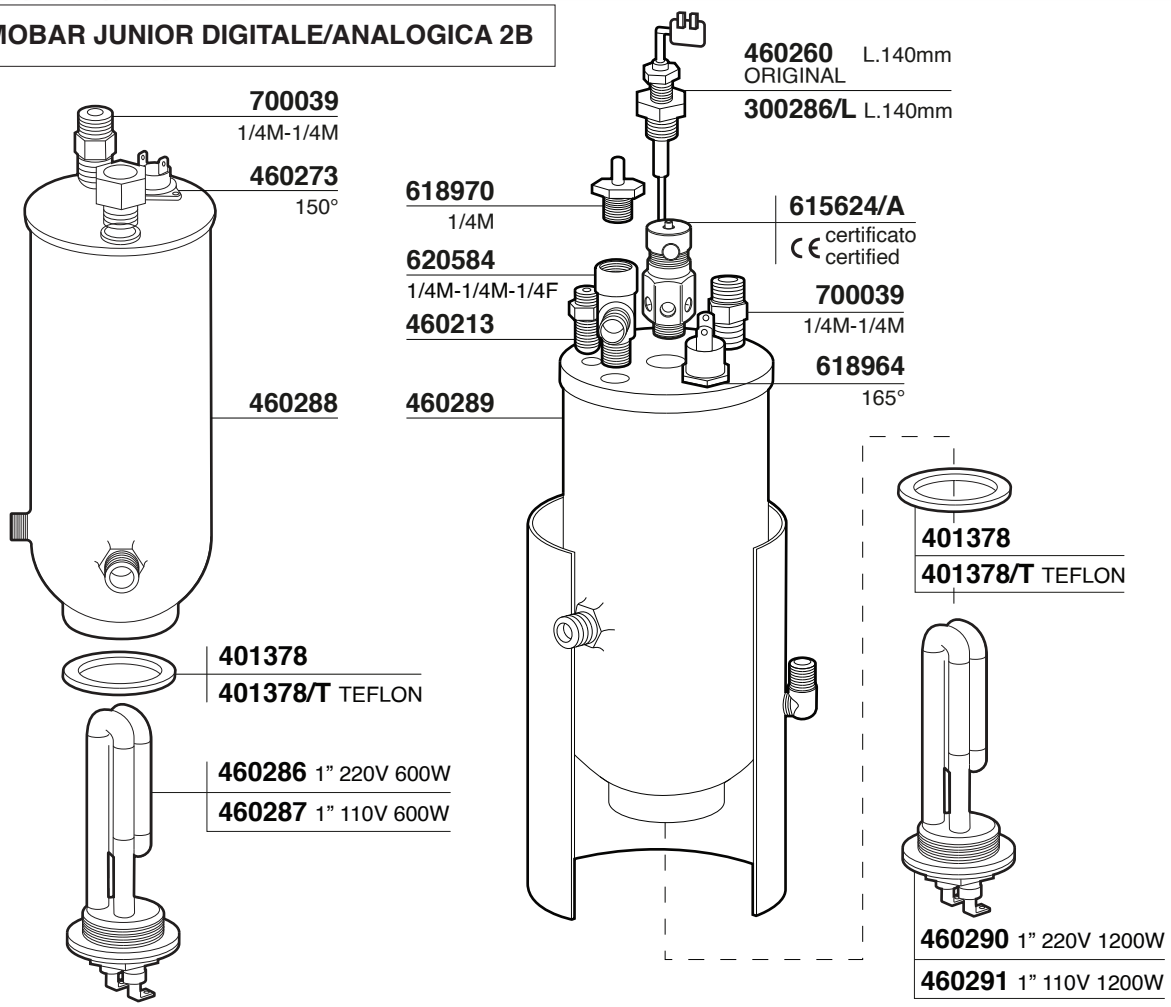

DOMOBAR JUNIOR DIGITALE/ANALOGICA HX

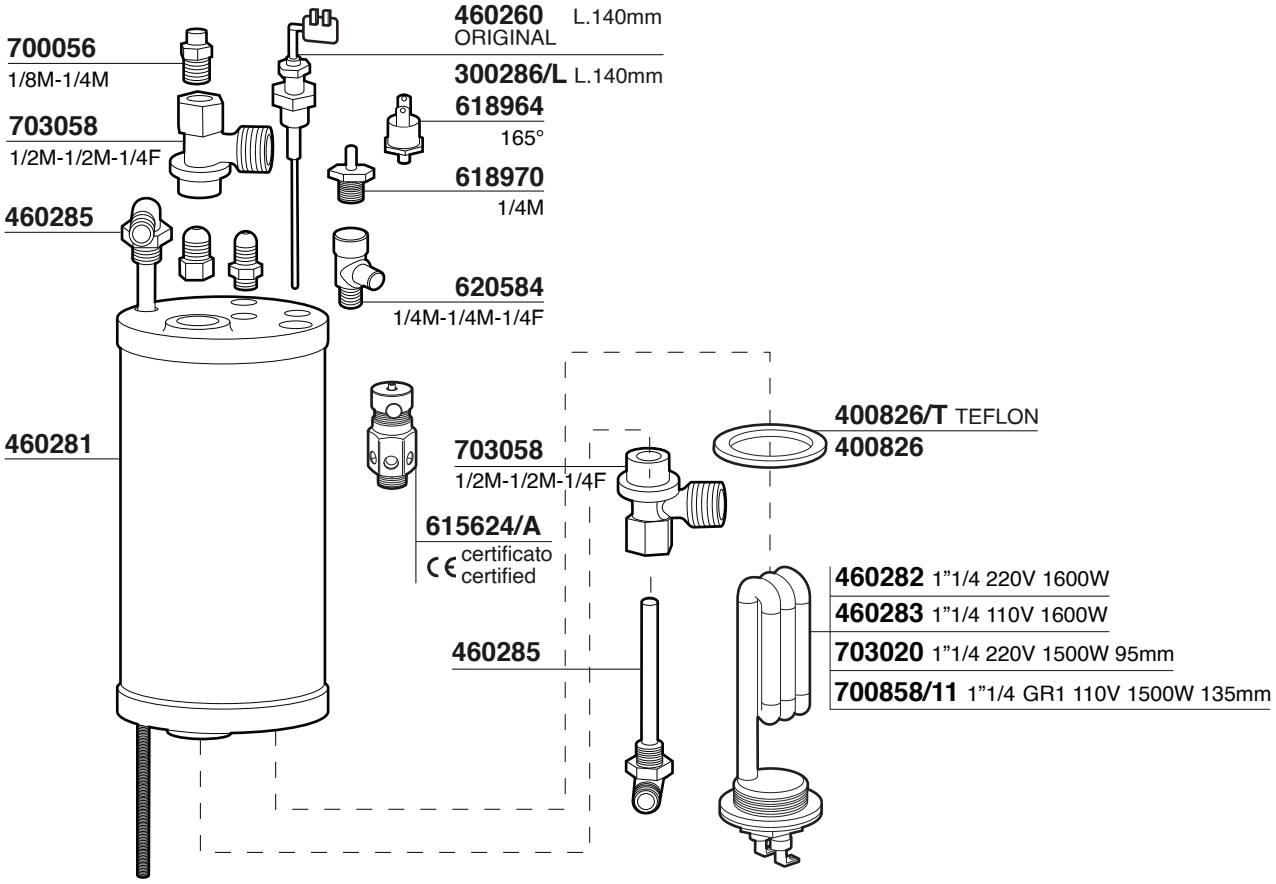

DOMOBAR SUPER

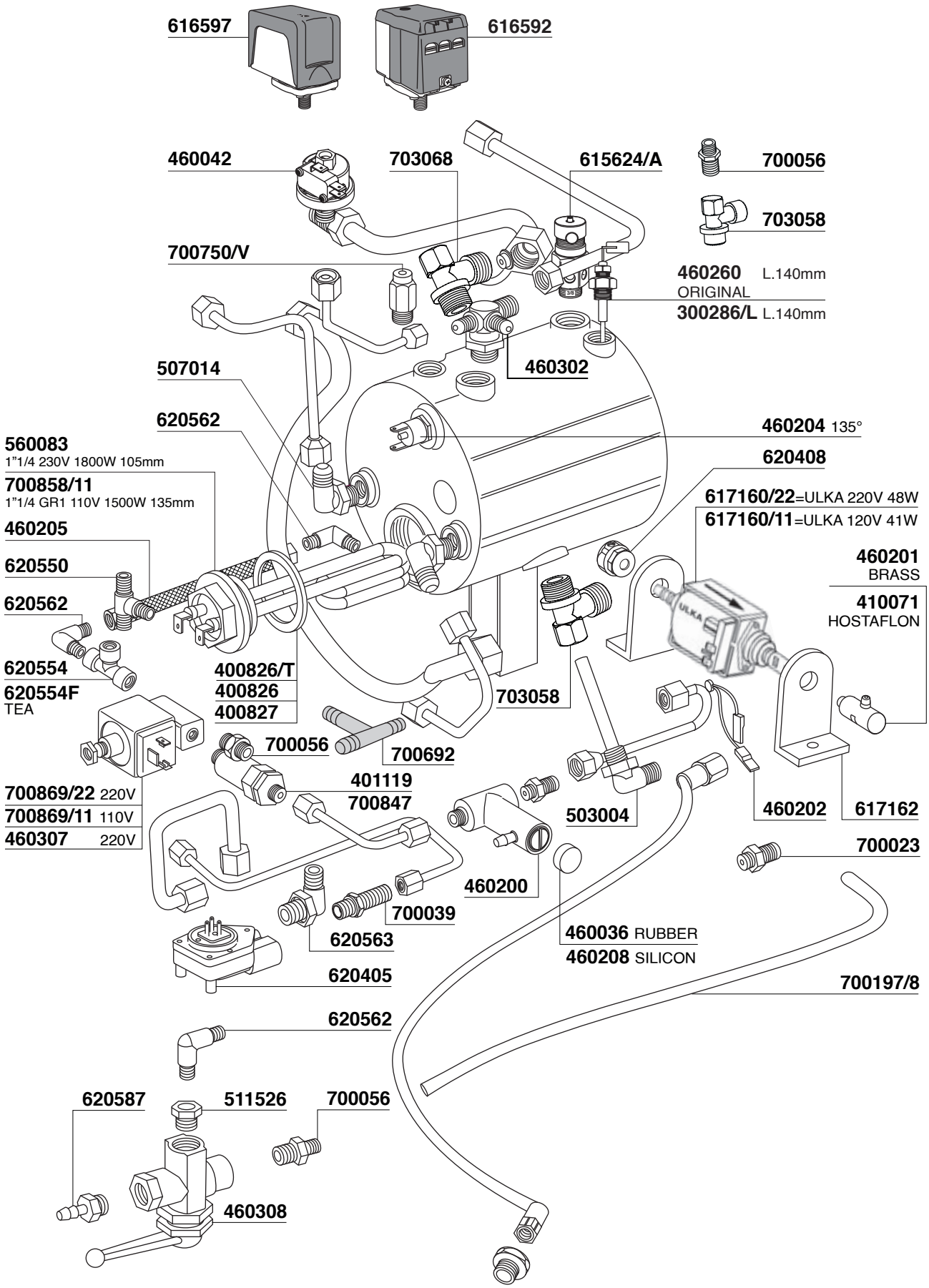

VIBIEMME

DOMOBAR CALDAIA VERTICALE

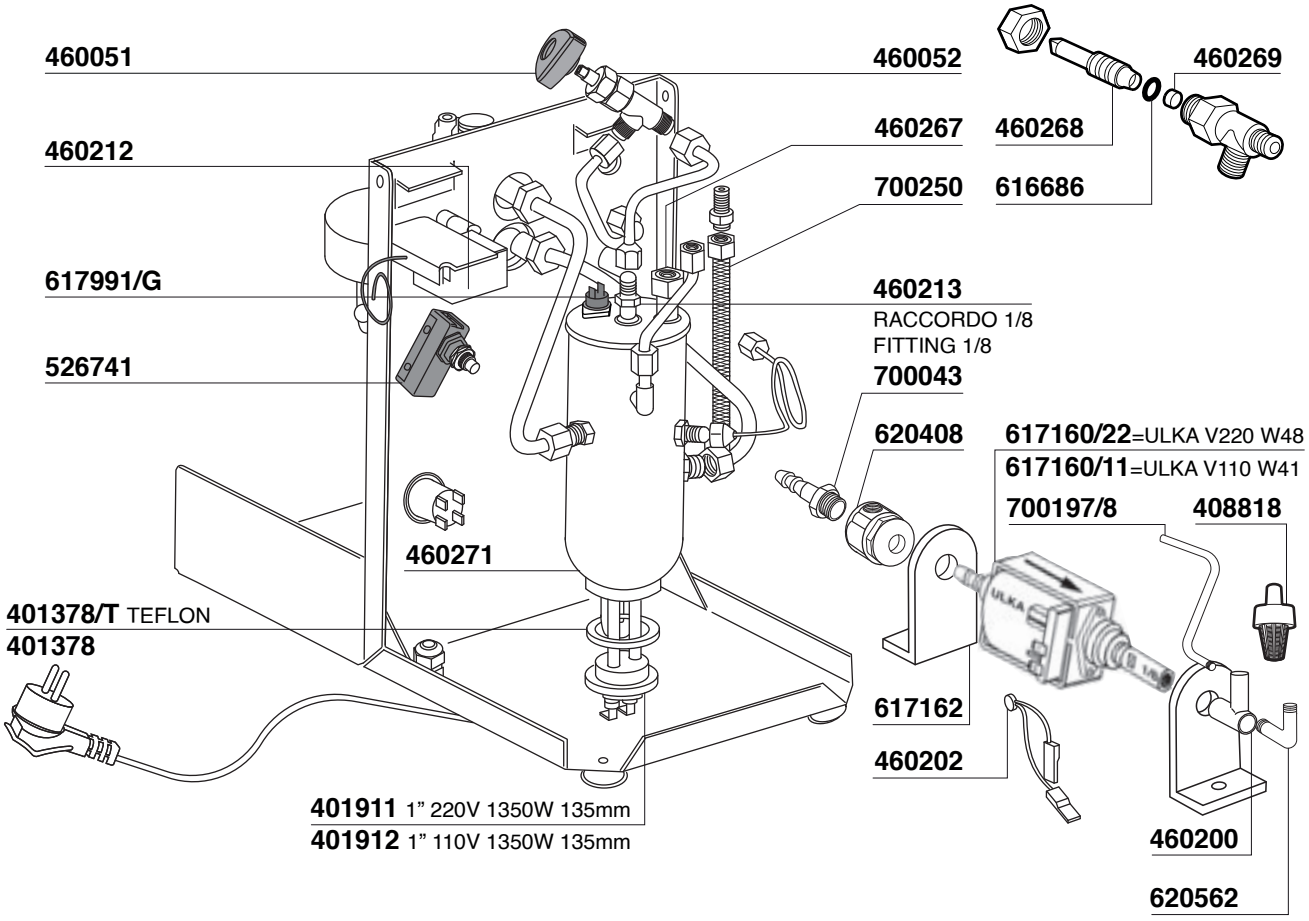

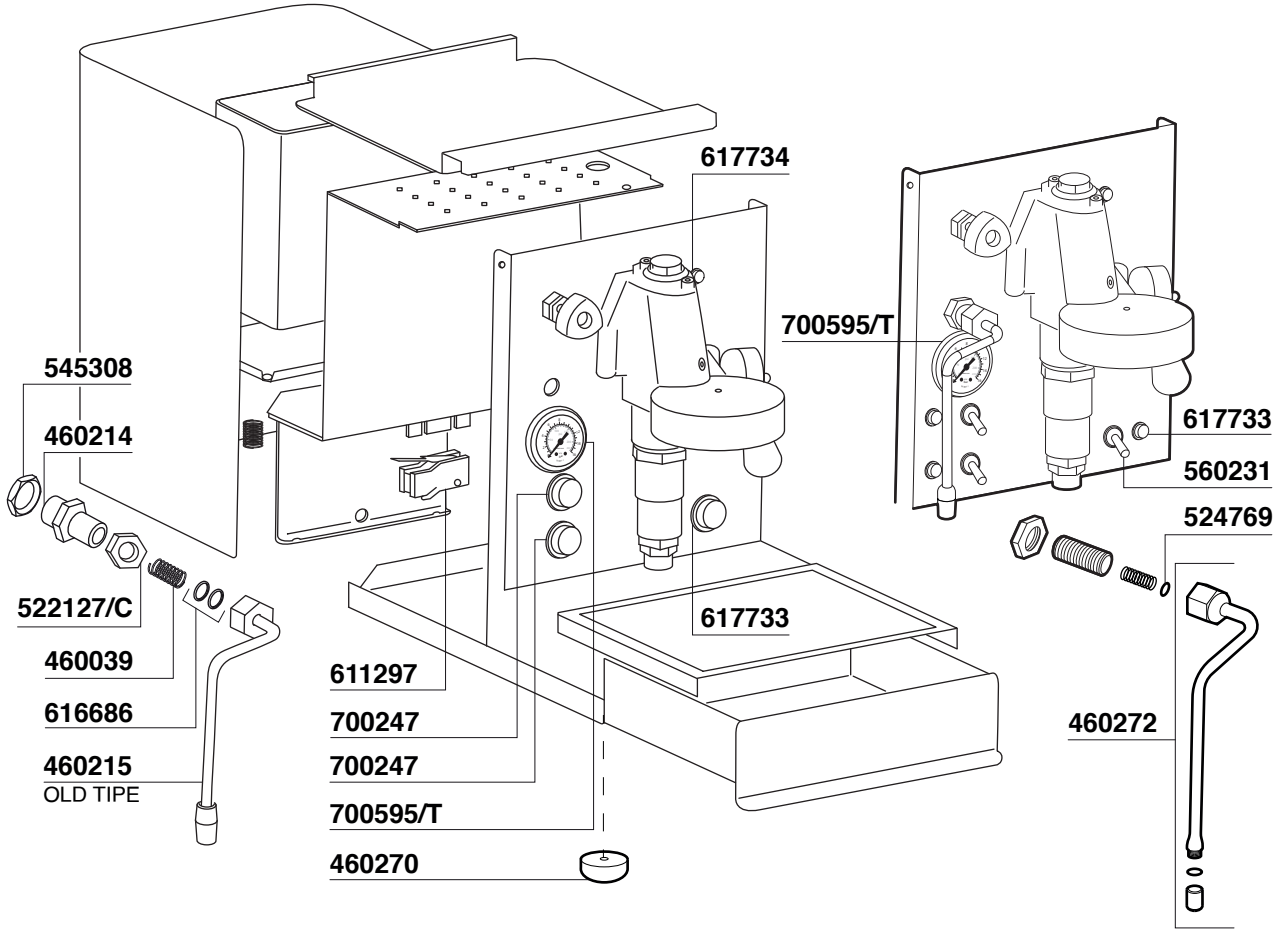

DOMOBAR

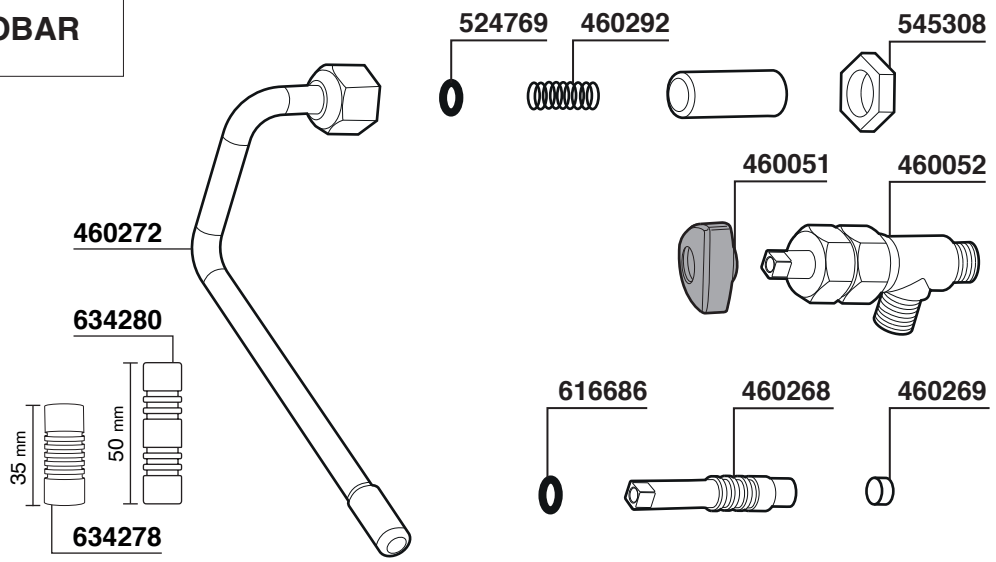

DOMOBAR JUNIOR

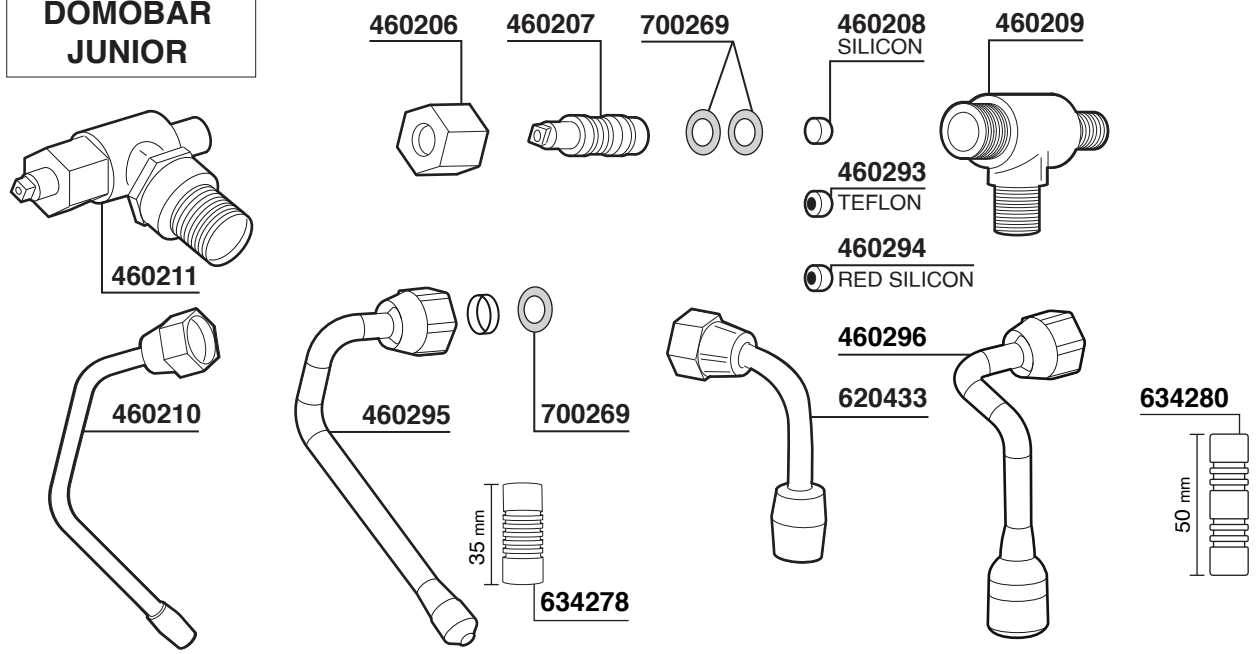

DOMOBAR SUPER

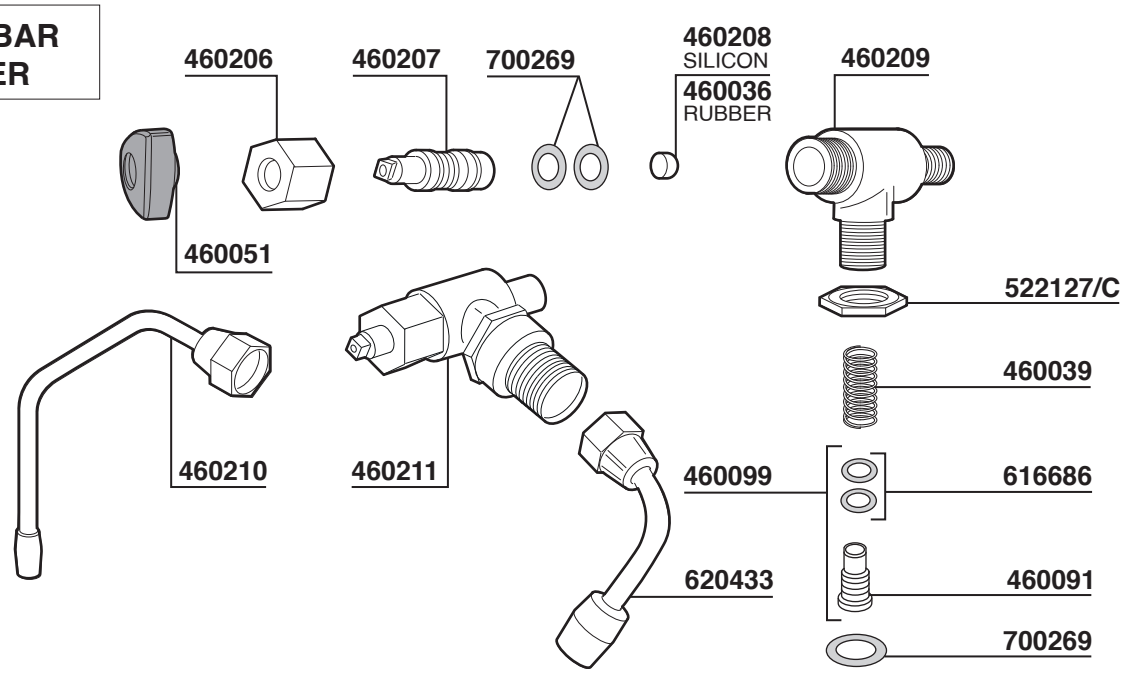

VICTORIA ARDUINO

Tav.01

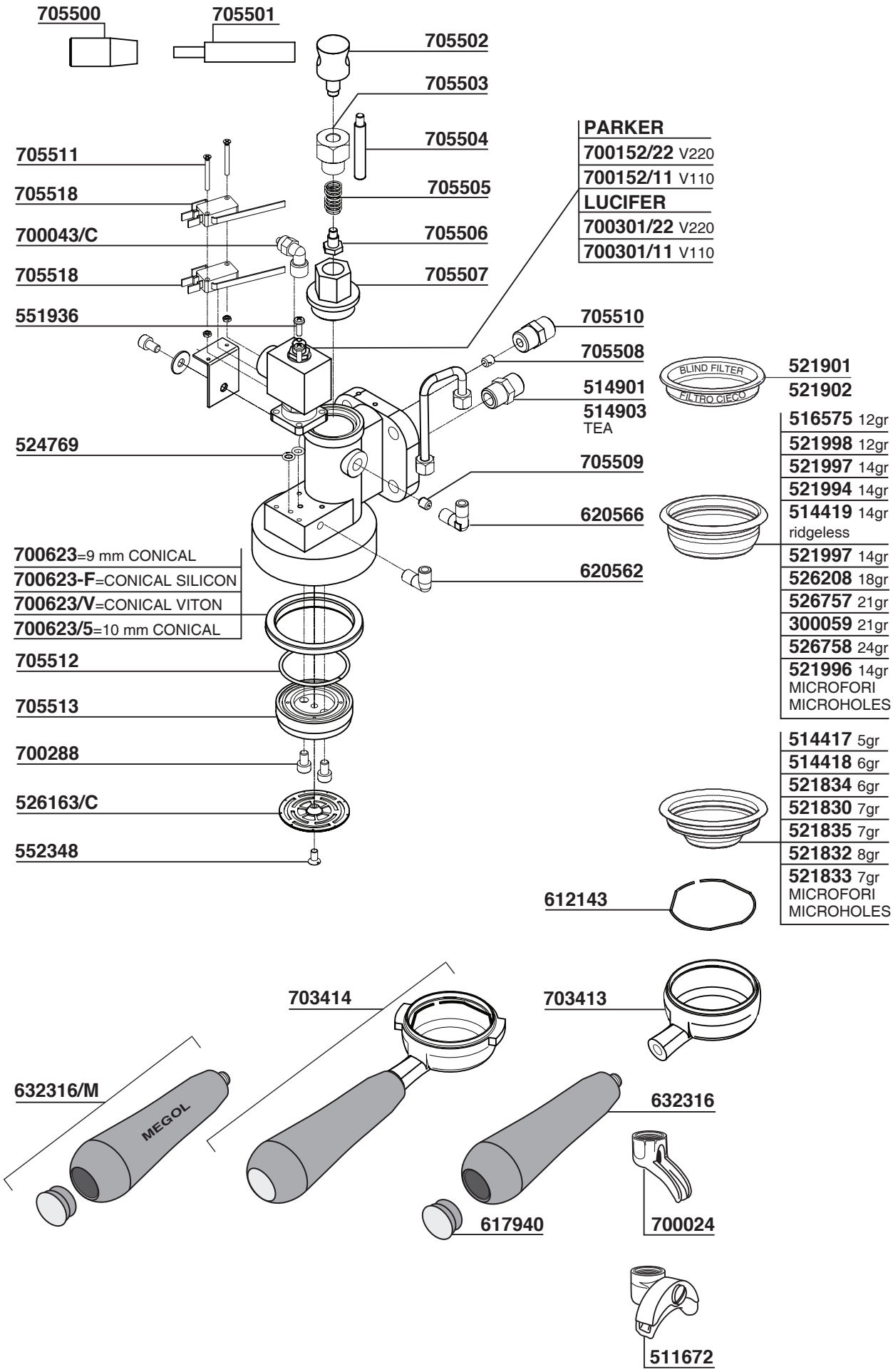

VICTORIA ARDUINO

Tav. 02

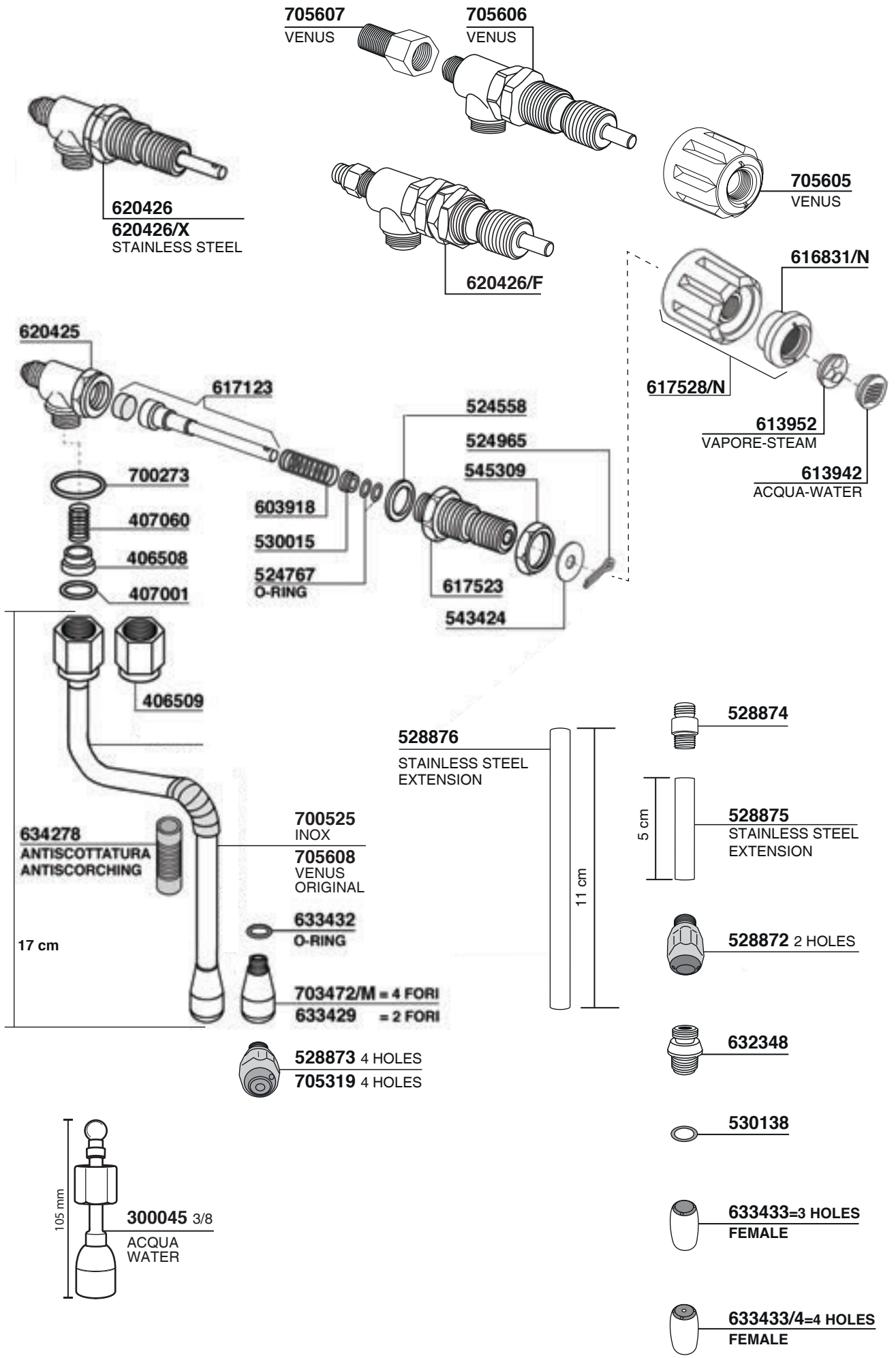

VICTORIA ARDUINO

Tav. 03

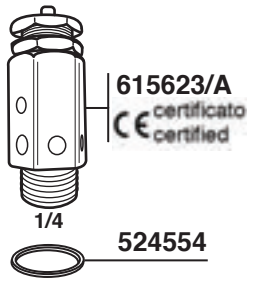

615623/A
CE certificato certified

524554

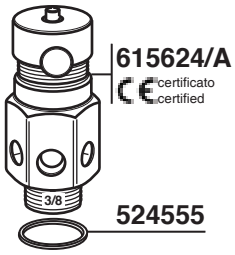

615624/A
CE certificato certified

524555

618968

524554

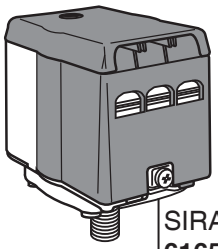

SIRAI
616592

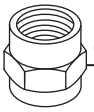

620411=3/8F

524555

617991

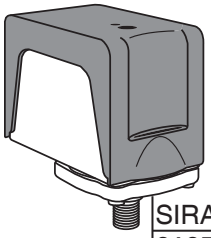

SIRAI
616597 CE/UL

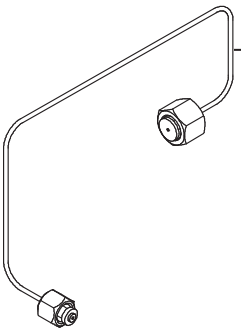

705367
1/8 -1/4

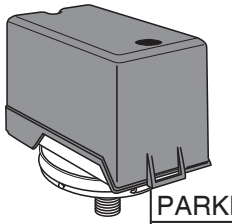

PARKER
616599 CE/UL

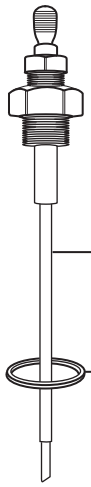

612601/L 140mm

524554

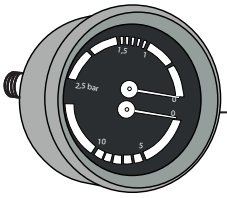

700874

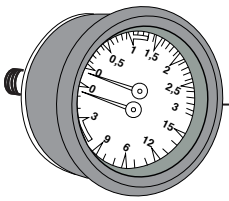

700411

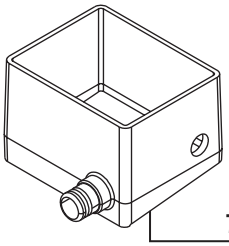

705321

705514

705515

705516

530134

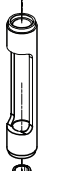

703462

530134

705516

705515

705517

705515

700169/M

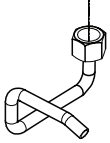

703456/T

703458 = GR2 W3000 V220/400 mm.340

VICTORIA ARDUINO Tav.04

BLACK EAGLE

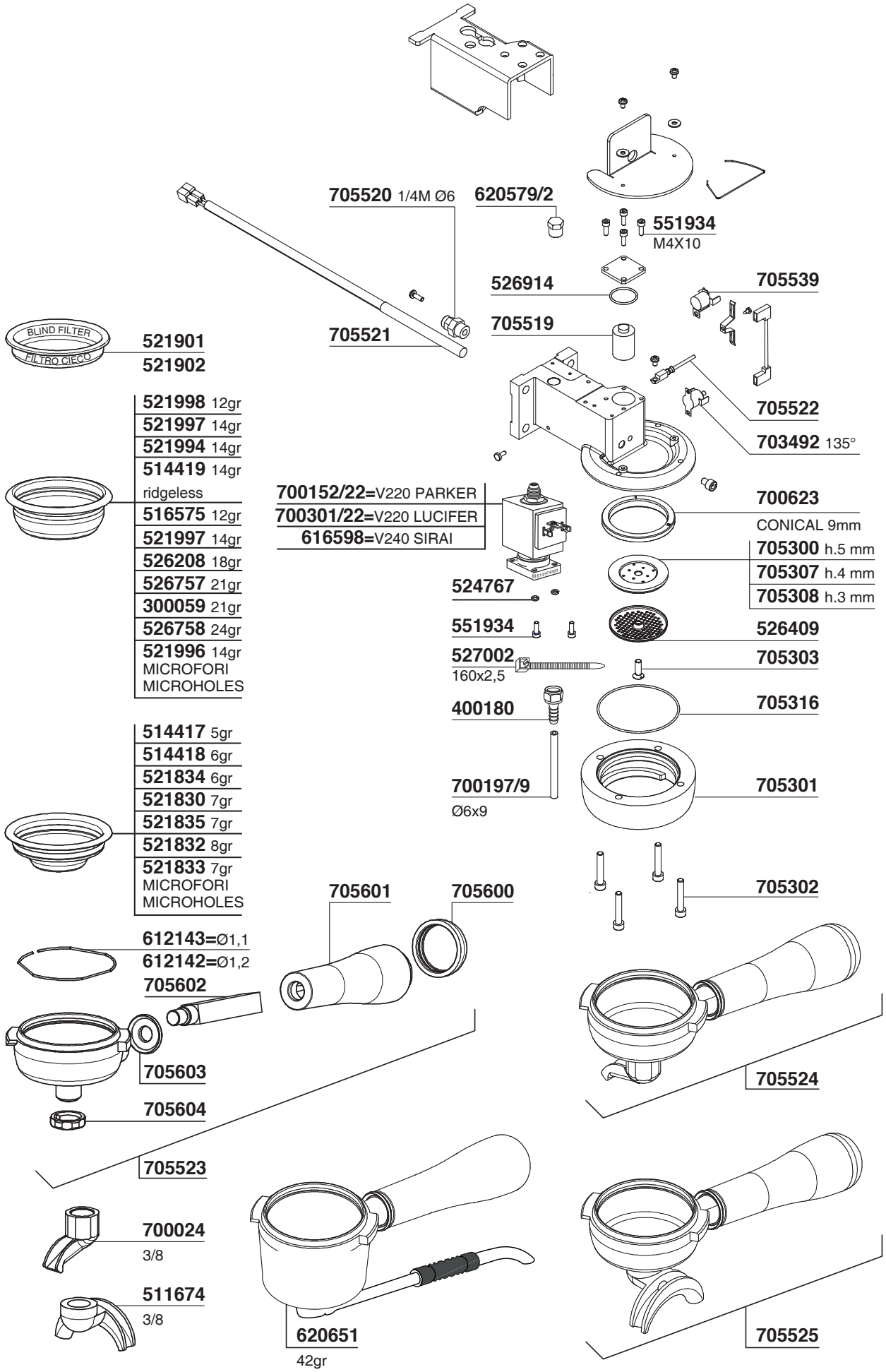

VICTORIA ARDUINO Tav. 05

BLACK EAGLE

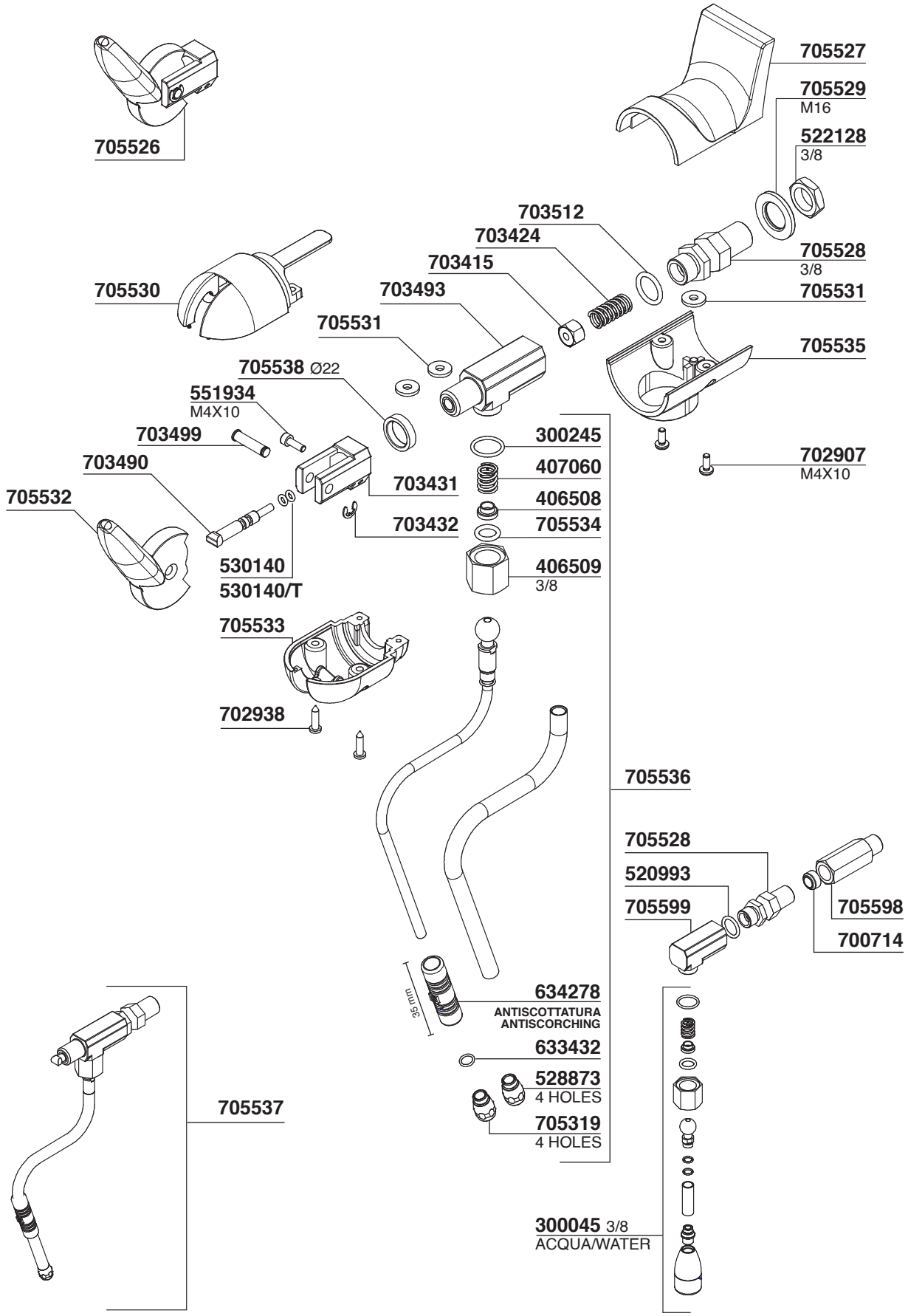

VICTORIA ARDUINO Tav.06

BLACK EAGLE

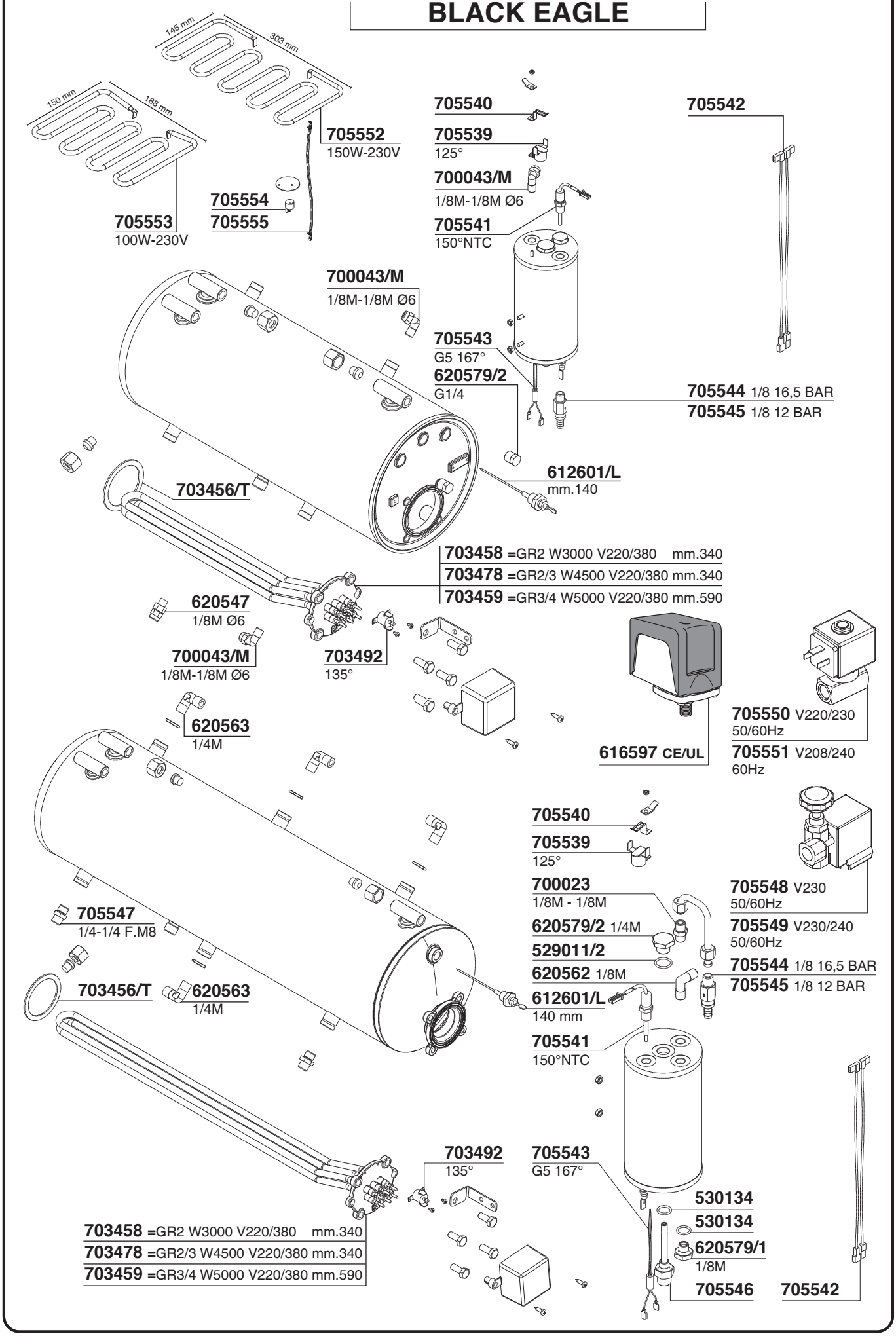

VICTORIA ARDUINO Tav. 07

BLACK EAGLE

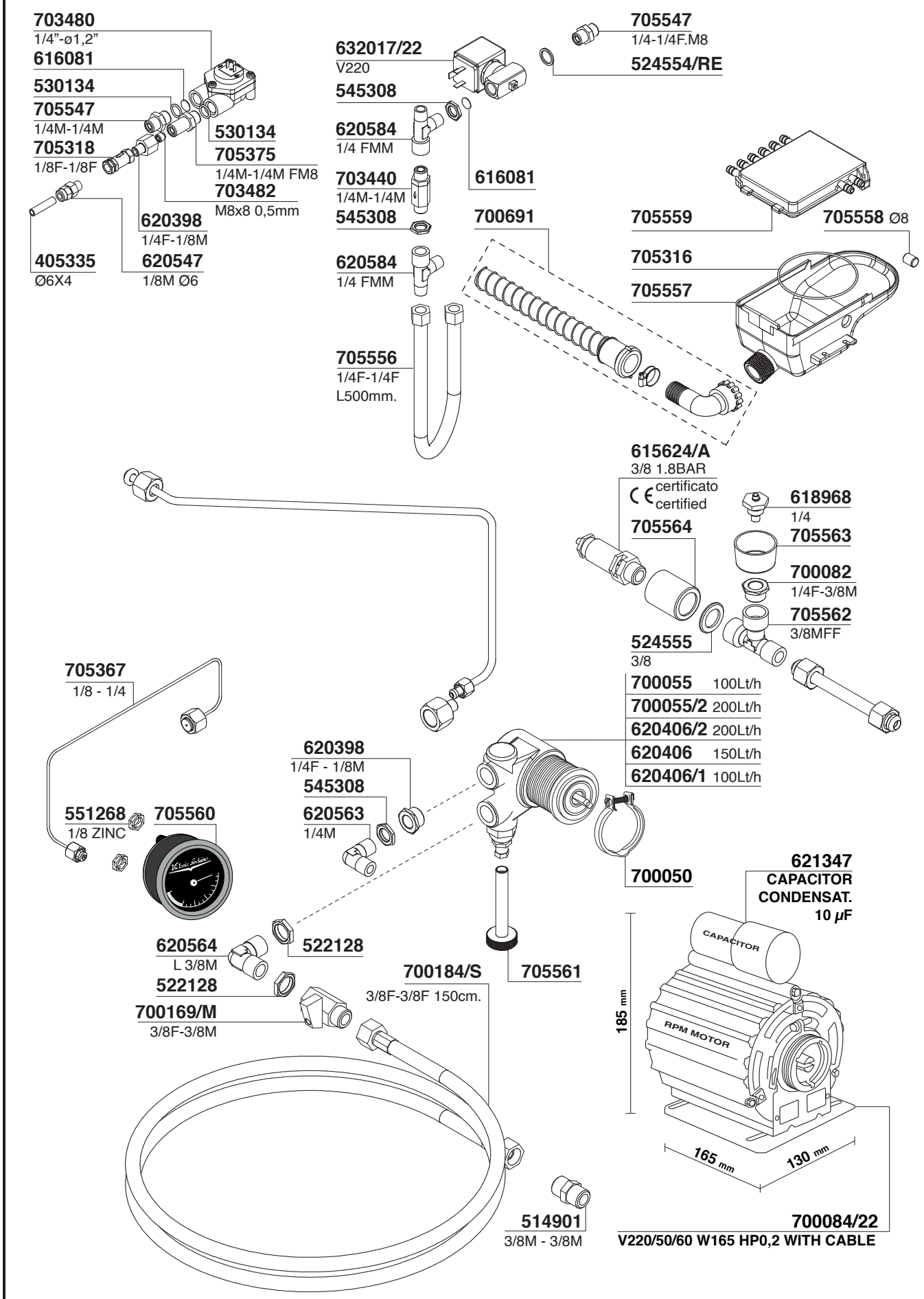

VICTORIA ARDUINO Tav.08

BLACK EAGLE

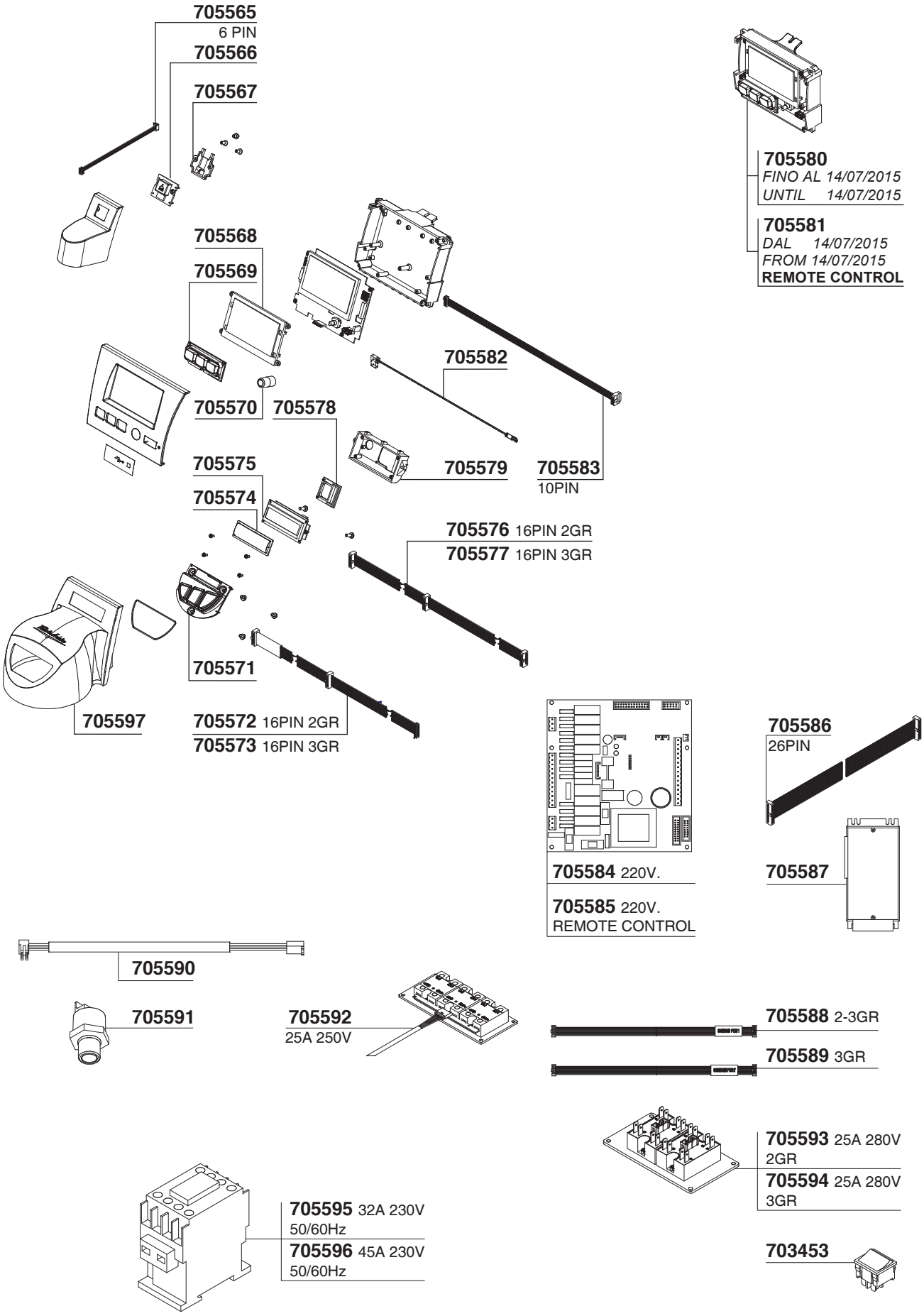

WEGA

Tav. 01

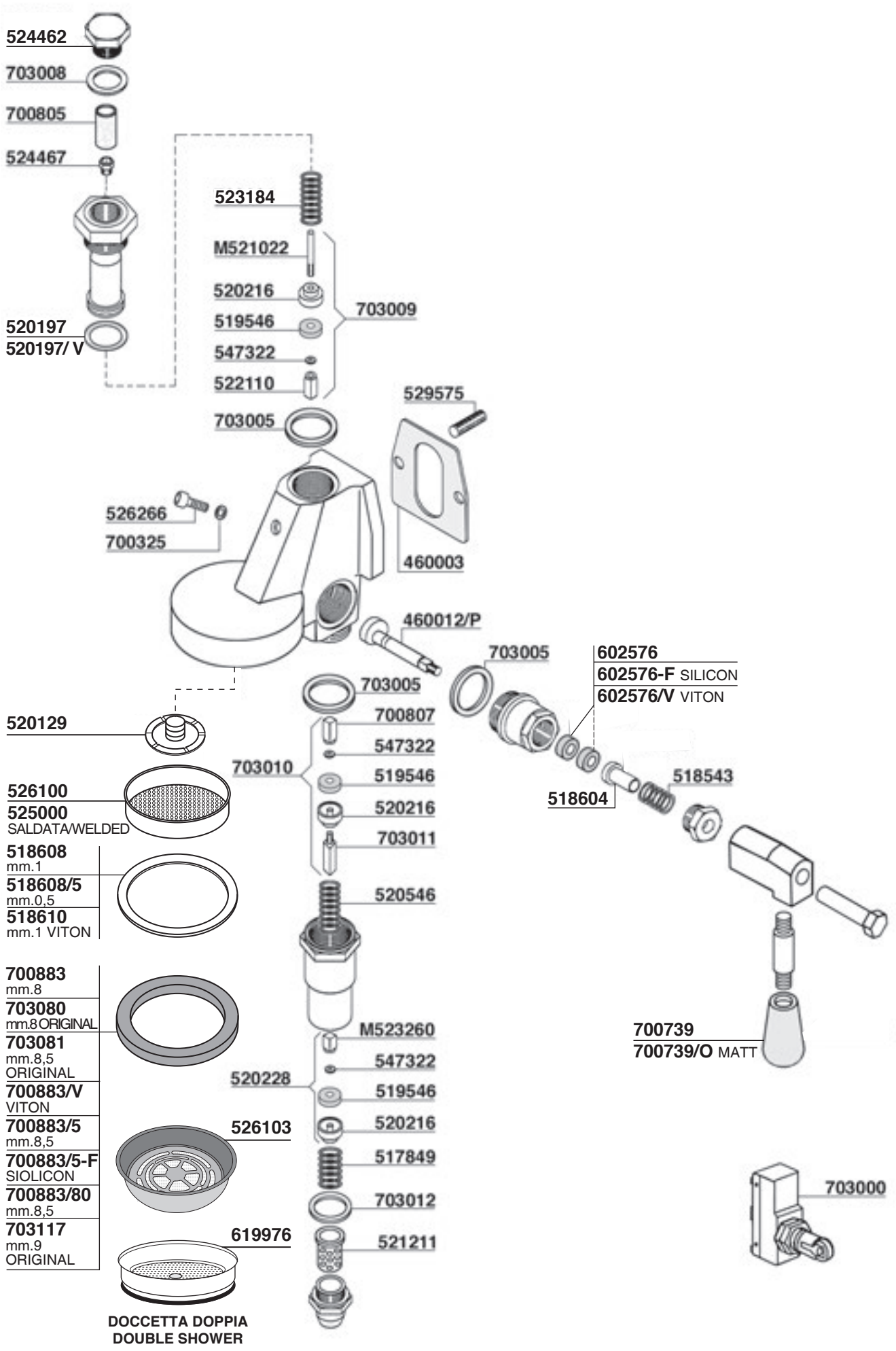
524462
703008
700805
524467
523184
M521022
520216
519546
547322
522110
703009
520197
520197/ V
529575
703005
526266
700325
460003
460012/P
703005
602576
602576-F SILICON
602576/V VITON
703005
700807
547322
519546
520216
703011
703010
520129
526100
525000
SALDATA/WELDED
518608
mm.1
518608/5
mm.0,5
518610
mm.1 VITON
518543
518604
520546
700883
mm.8
703080
mm.8 ORIGINAL
703081
mm.8,5
ORIGINAL
700883/V
VITON
700883/5
mm.8,5
700883/5-F
SIOLICON
700883/80
mm.8,5
703117
mm.9
ORIGINAL
M523260
547322
519546
520216
520228
526103
517849
703012
521211
619976
DOCCETTA DOPPIA
DOUBLE SHOWER
700739
700739/O MATT
703000

WEGA

Tav.02

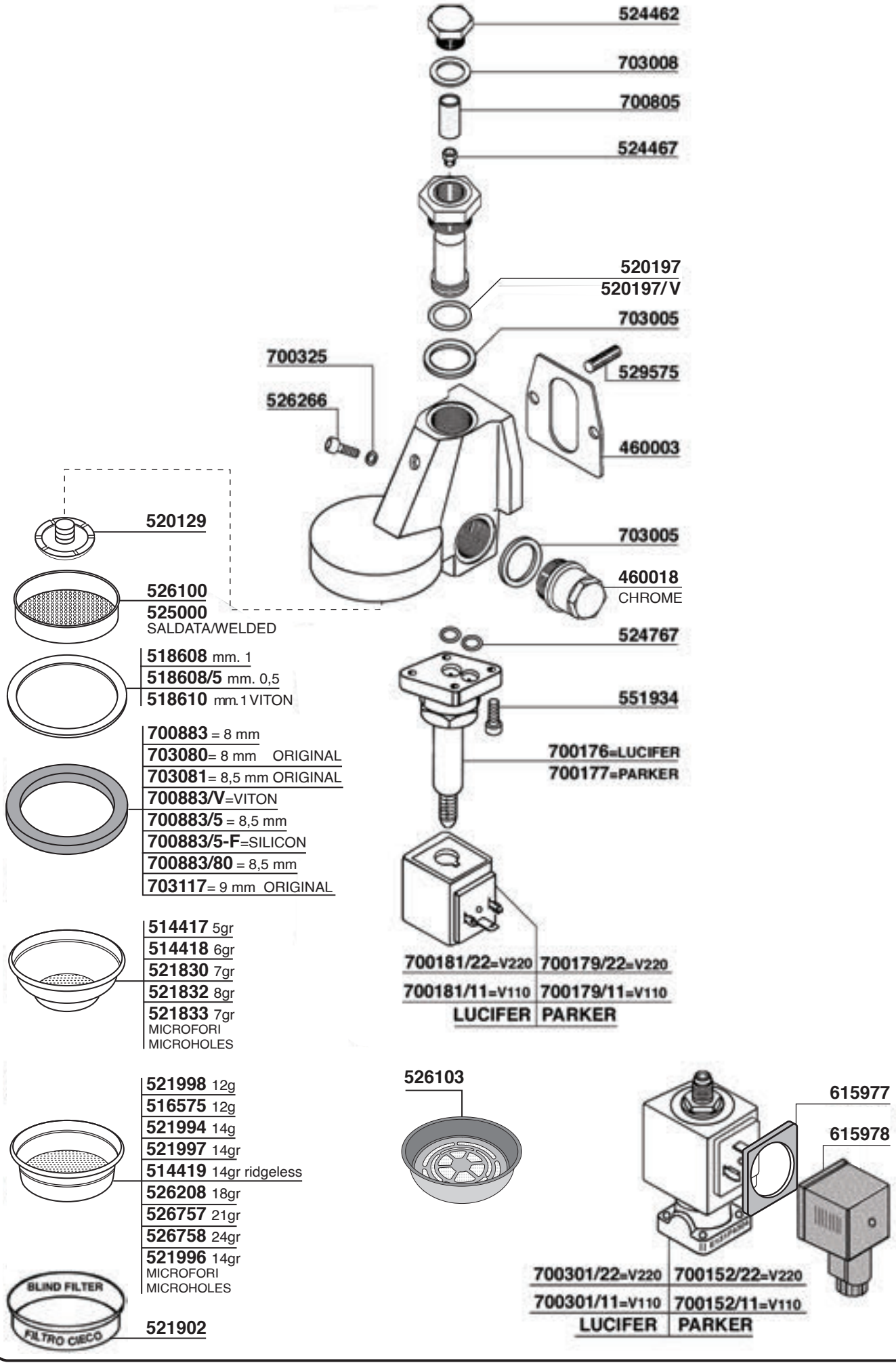
524462
703008
700805
524467
520197
520197/V
703005
700325
526266
529575
460003
520129
703005
460018
CHROME
526100
525000
SALDATA/WELDED
524767
518608 mm. 1
518608/5 mm. 0,5
518610 mm.1 VITON
551934
700883 = 8 mm
703080= 8 mm ORIGINAL
703081= 8,5 mm ORIGINAL
700883/V=VITON
700883/5 = 8,5 mm
700883/5-F=SILICON
700883/80 = 8,5 mm
703117= 9 mm ORIGINAL
700176=LUCIFER
700177=PARKER
514417 5gr
514418 6gr
521830 7gr
521832 8gr
521833 7gr
MICROFORI
MICROHOLES
700181/22=V220
700179/22=V220
700181/11=V110
700179/11=V110
LUCIFER
PARKER
526103
521998 12g
516575 12g
521994 14g
521997 14gr
514419 14gr ridgeless
526208 18gr
526757 21gr
526758 24gr
521996 14gr
MICROFORI
MICROHOLES
615977
615978
BLIND FILTER
FILTRO CIECO
521902
700301/22=V220
700152/22=V220
700301/11=V110
700152/11=V110
LUCIFER
PARKER

WEGA

Tav.03

VENERE

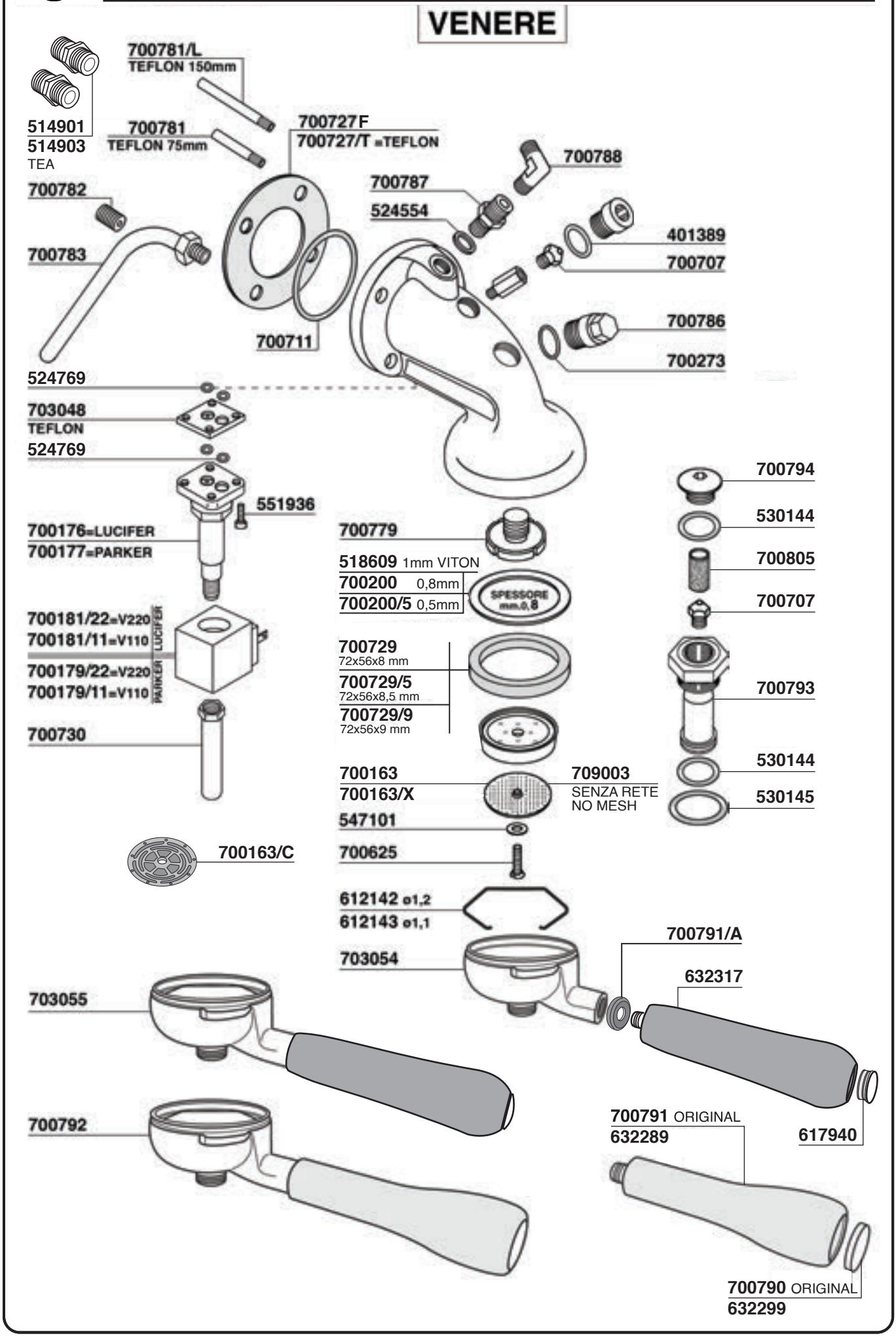

GRUPPO/GROUP Ø53

CONCEPT - URBAN

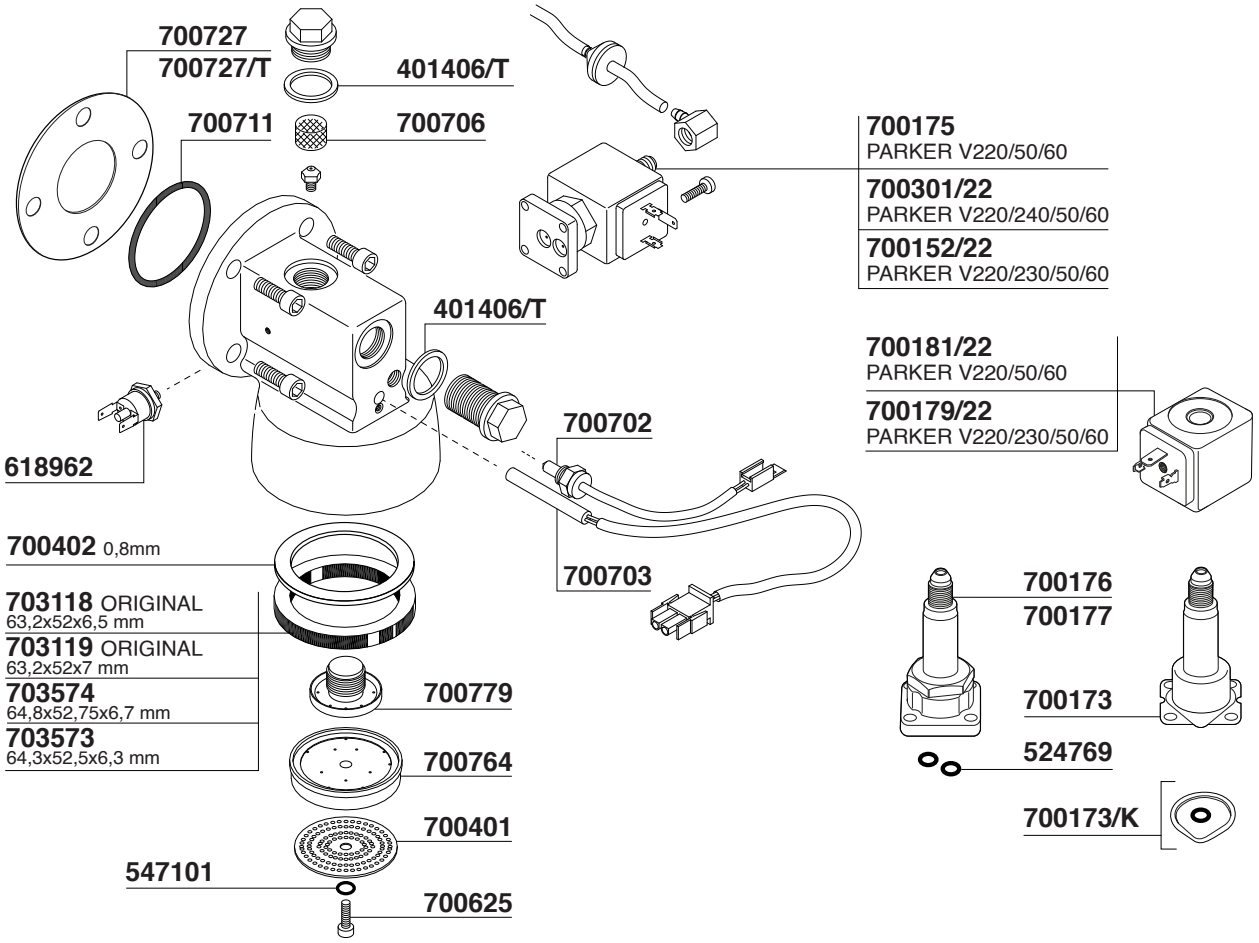

GRUPPO/GROUP Ø58

MY CONCEPT - CONCEPT

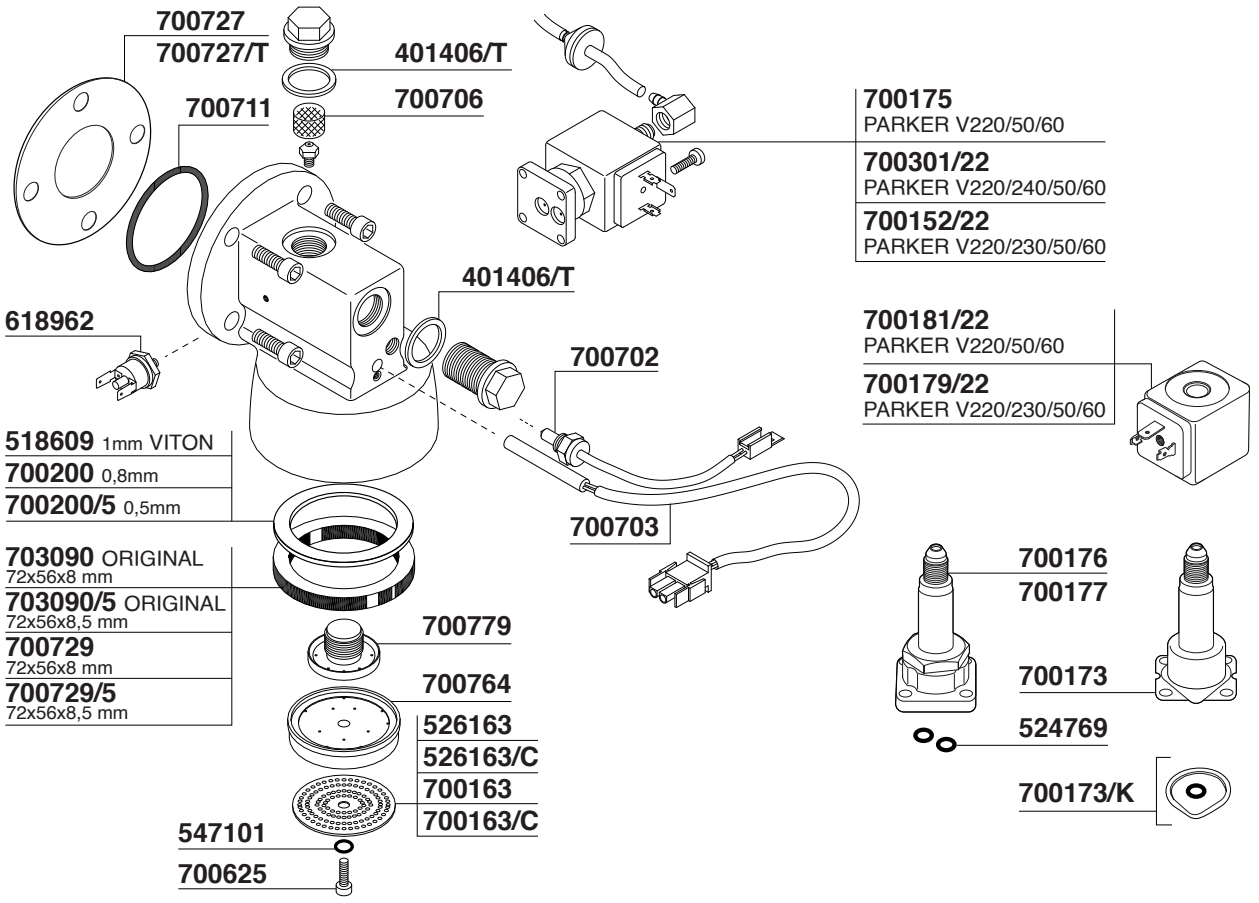

WEGA

Tav. 05

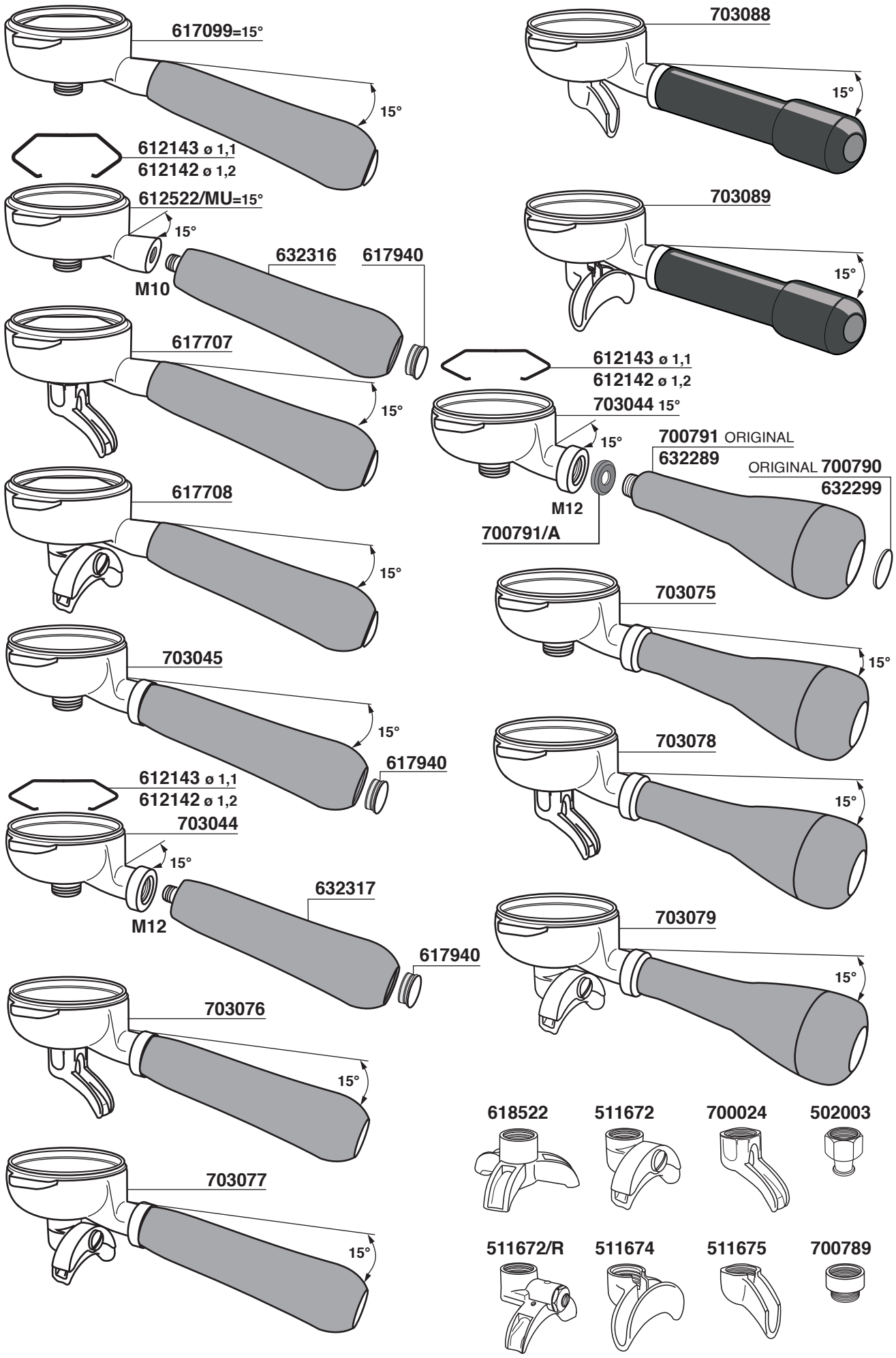
617099=15°
15°
612143 ø 1,1
612142 ø 1,2
612522/MU=15°
15°
M10
632316
617940
617707
15°
617708
15°
703045
15°
617940
612143 ø 1,1
612142 ø 1,2
703044
15°
M12
632317
617940
703076
15°
703077
15°
703088
15°
703089
15°
612143 ø 1,1
612142 ø 1,2
703044 15°
15°
700791 ORIGINAL
632289
ORIGINAL 700790
632299
M12
700791/A
703075
15°
703078
15°
703079
15°
618522
511672
700024
502003
511672/R
511674
511675
700789

WEGA

Tav. 06

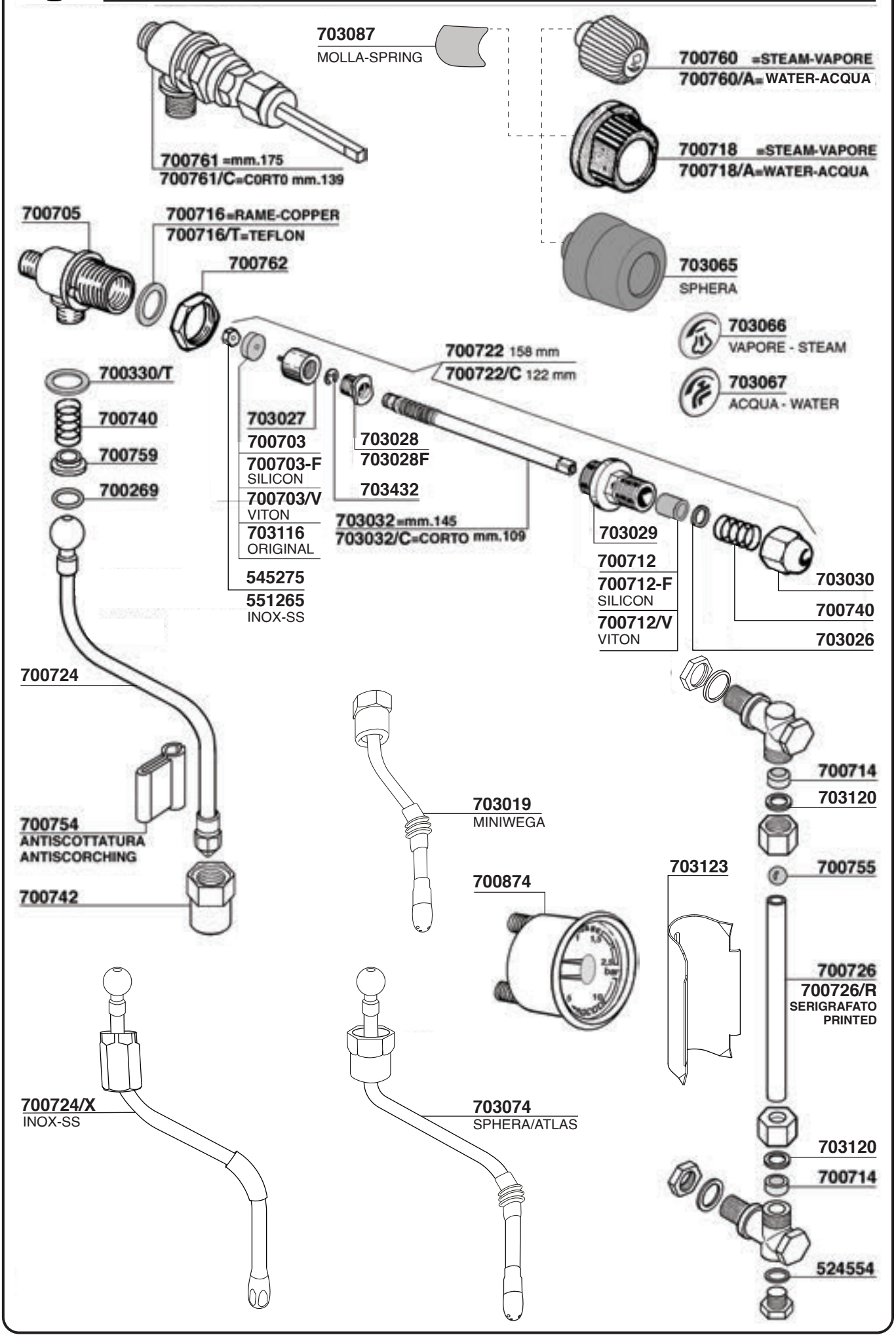
703087
MOLLA-SPRING
700760 =STEAM-VAPORE
700760/A= WATER-ACQUA
700718 =STEAM-VAPORE
700718/A=WATER-ACQUA
700761 =mm.175
700761/C=CORTO mm.139
700705
700716=RAME-COPPER
700716/T=TEFLON
700762
703065
SPHERA
703066
VAPORE - STEAM
703067
ACQUA - WATER
700722 158 mm
700722/C 122 mm
700330/T
700740
700759
700269
703027
700703
700703-F
SILICON
700703/V
VITON
703116
ORIGINAL
545275
551265
INOX-SS
703028
703028F
703432
703032=mm.145
703032/C=CORTO mm.109
703029
700712
700712-F
SILICON
700712/V
VITON
703030
700740
703026
700724
700754
ANTISCOTTATURA
ANTISCORCHING
700742
703019
MINIWEGA
700874
703123
700714
703120
700755
700726
700726/R
SERIGRAFATO
PRINTED
700724/X
INOX-SS
703074
SPHERA/ATLAS
703120
700714
524554

WEGA

MY CONCEPT POLARIS

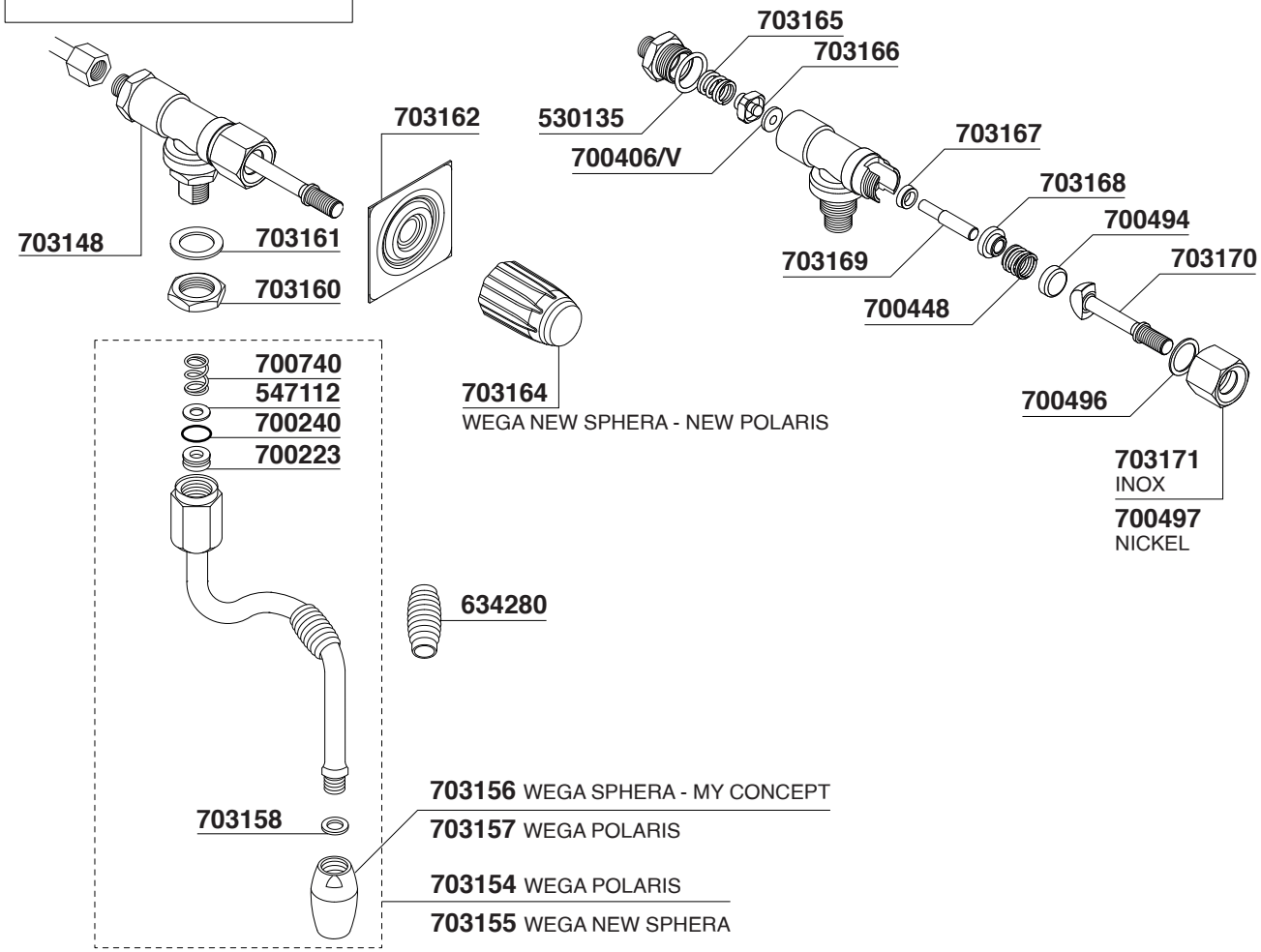

MY CONCEPT POLARIS - ATLAS - CONCEPT IO - PEGASO

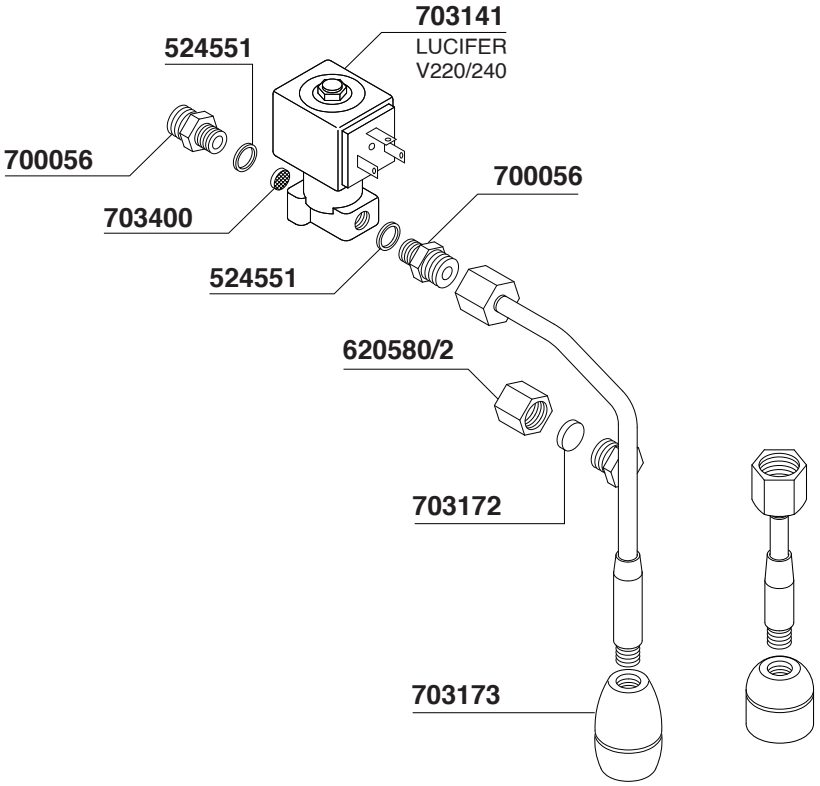

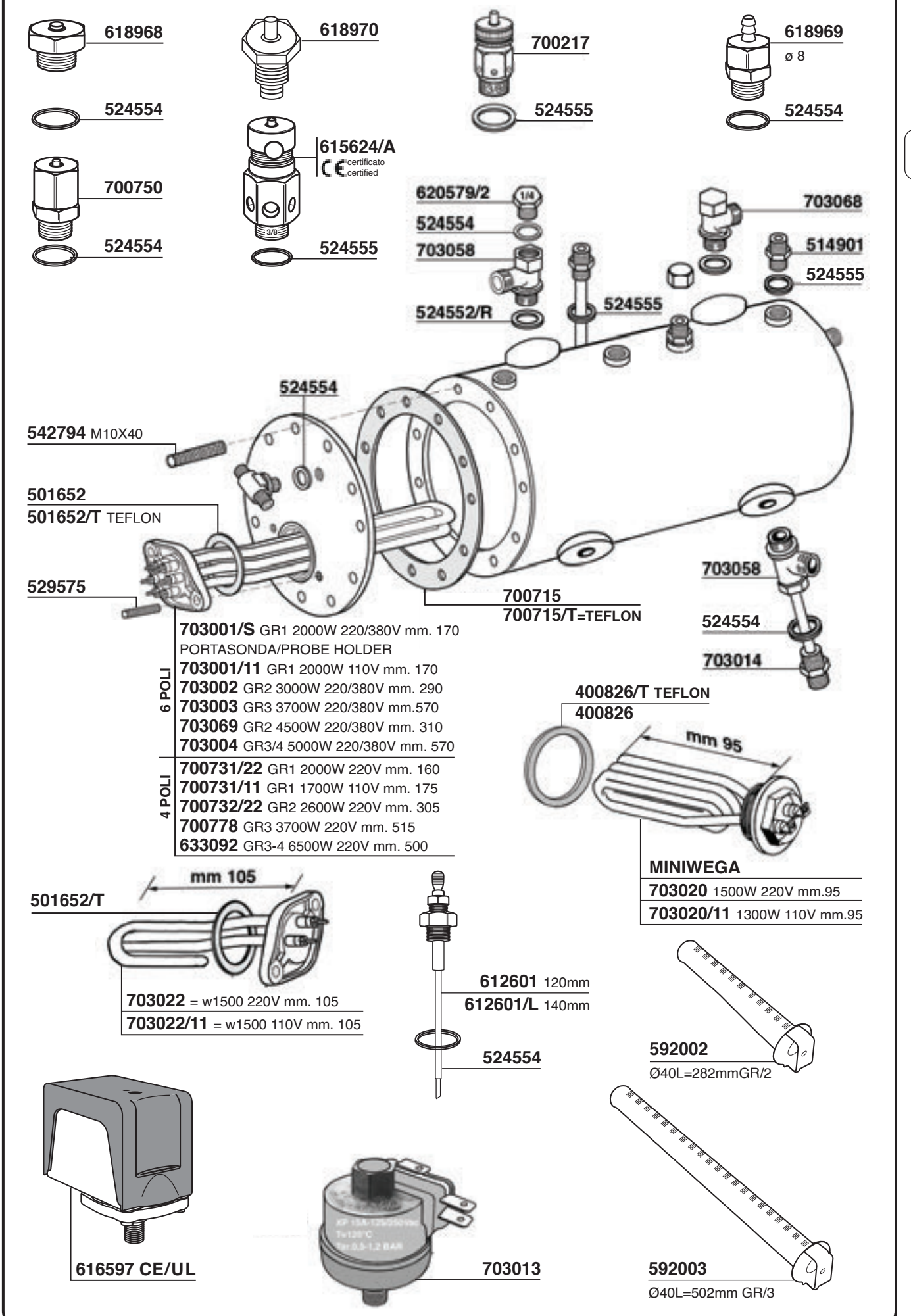
618968
524554
700750
524554
618970
615624/A
CE certificato certified
524555
700217
524555
618969
ø 8
524554
620579/2
1/4
524554
703058
524552/R
524555
703068
514901
524555
524554
542794 M10X40
501652
501652/T TEFLON
529575
703058
524554
703014
700715
700715/T=TEFLON
6 POLI
703001/S GR1 2000W 220/380V mm. 170
PORTASONDA/PROBE HOLDER
703001/11 GR1 2000W 110V mm. 170
703002 GR2 3000W 220/380V mm. 290
703003 GR3 3700W 220/380V mm.570
703069 GR2 4500W 220/380V mm. 310
703004 GR3/4 5000W 220/380V mm. 570
4 POLI
700731/22 GR1 2000W 220V mm. 160
700731/11 GR1 1700W 110V mm. 175
700732/22 GR2 2600W 220V mm. 305
700778 GR3 3700W 220V mm. 515
633092 GR3-4 6500W 220V mm. 500
400826/T TEFLON
400826
mm 95
MINIWEGA
703020 1500W 220V mm.95
703020/11 1300W 110V mm.95
mm 105
501652/T
703022 = w1500 220V mm. 105
703022/11 = w1500 110V mm. 105
612601 120mm
612601/L 140mm
524554
592002
Ø40L=282mmGR/2
616597 CE/UL
703013
592003
Ø40L=502mm GR/3

CALDAIA SERVIZI / SERVICE BOILER

CONCEPT - MY CONCEPT
URBAN

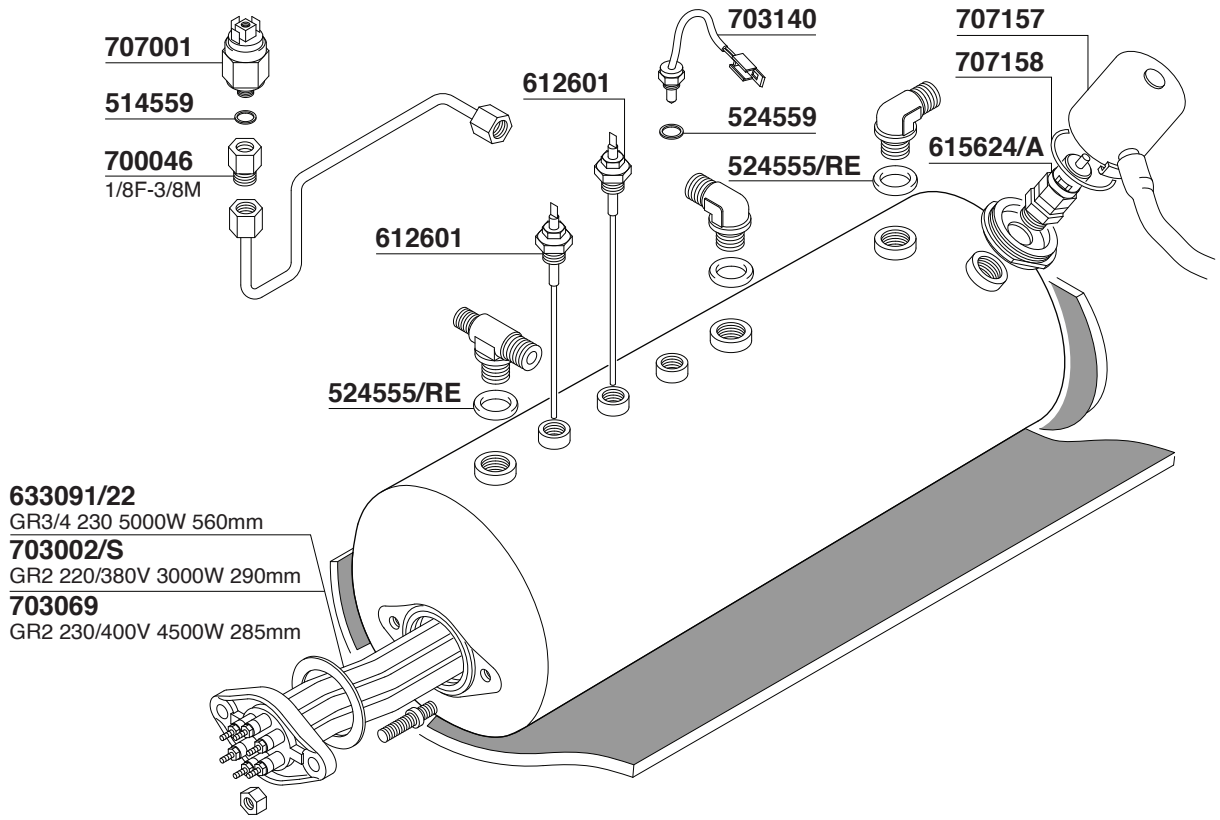

CALDAIA CAFFE' / COFFEE BOILER

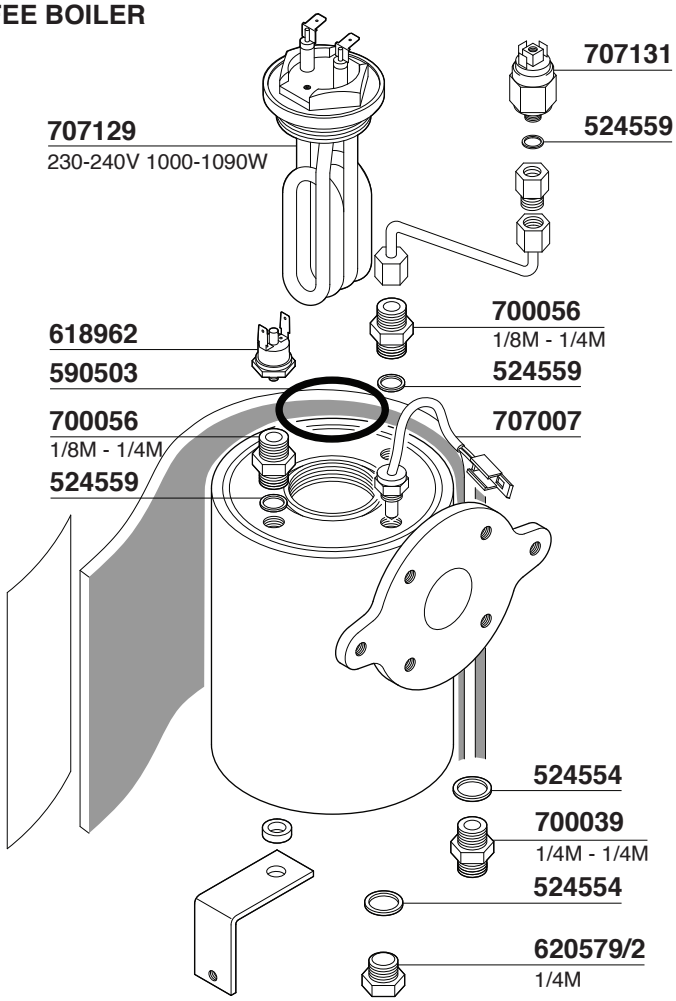

MOTORE RAFFREDDATO AD ACQUA - MOTOR WATERCOOL

621112
700182
700182
700182
115 mm
140 mm
135 mm
514902
514902/X
524555
514901
514903 TEA
524555
700055
703024
700050
703023
MOTOR V220
703023/11
MOTOR V110
700008 PROCON
700008/X INOX
STAINLESS STEEL

616602/11 110V
615978/P

700869/22 220V
700869/11 110V
615977
615978

615978/T
615979
617903
530148
551937
700621
620405/C
703082
620405
400835
703052
703151
703142
703150
524554
21 mm
68 mm
700011
21 mm
65 mm
700011/E
700749
20A 0-1
613656
700429
703072 WHITE
PULSANTE
PUSH BUTTON
703059
CROMATO
CHROME PLATED
703056/V=VITON
700769
32A 0-1
703025
32A 0-1-2
703031
524554
700744
700723
550168
700713
700739
700739/O MATT
523239
700741
700703
700703-F
SILICON
700703/V
VITON
703116
700747
700031/16

WEGA

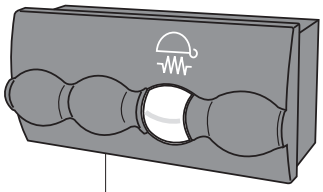

703060
SPHERA

PULSANTIERA SCALDATAZZE
CUP WARMER TOUCHPAD

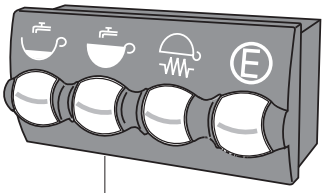

703062
SPHERA

PULSANTIERA SERVIZI
SERVICE TOUCHPAD

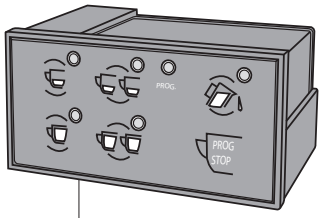

703016

PULSANTIERA
TOUCHPAD

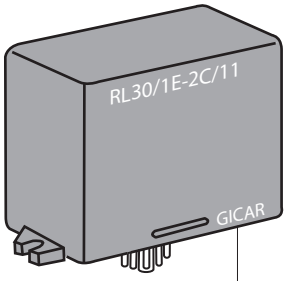

700574 220V
700574/11 110V

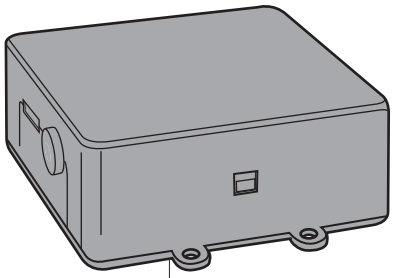

703073

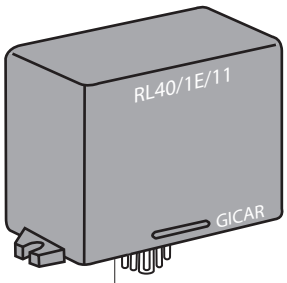

703017 220V

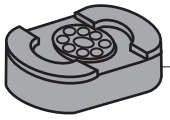

401920

401920

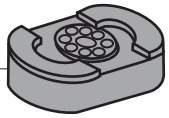

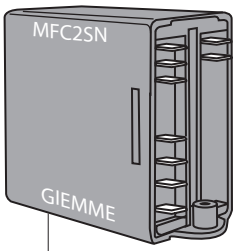

703018 V220
MINIWEGA

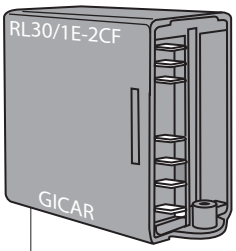

700737 V220
700737/11 V110
703063 WITH TIME OUT

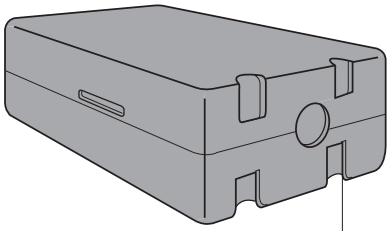

703057 V230
703057/11 V110
CENTRALINA SPHERA EVD GR1-2-3
ELECTRONIC BOX SPHERA EVD GR1-2-3

MACINACAFFE'

Tav. 01

ANFIM MODEL: HAUS

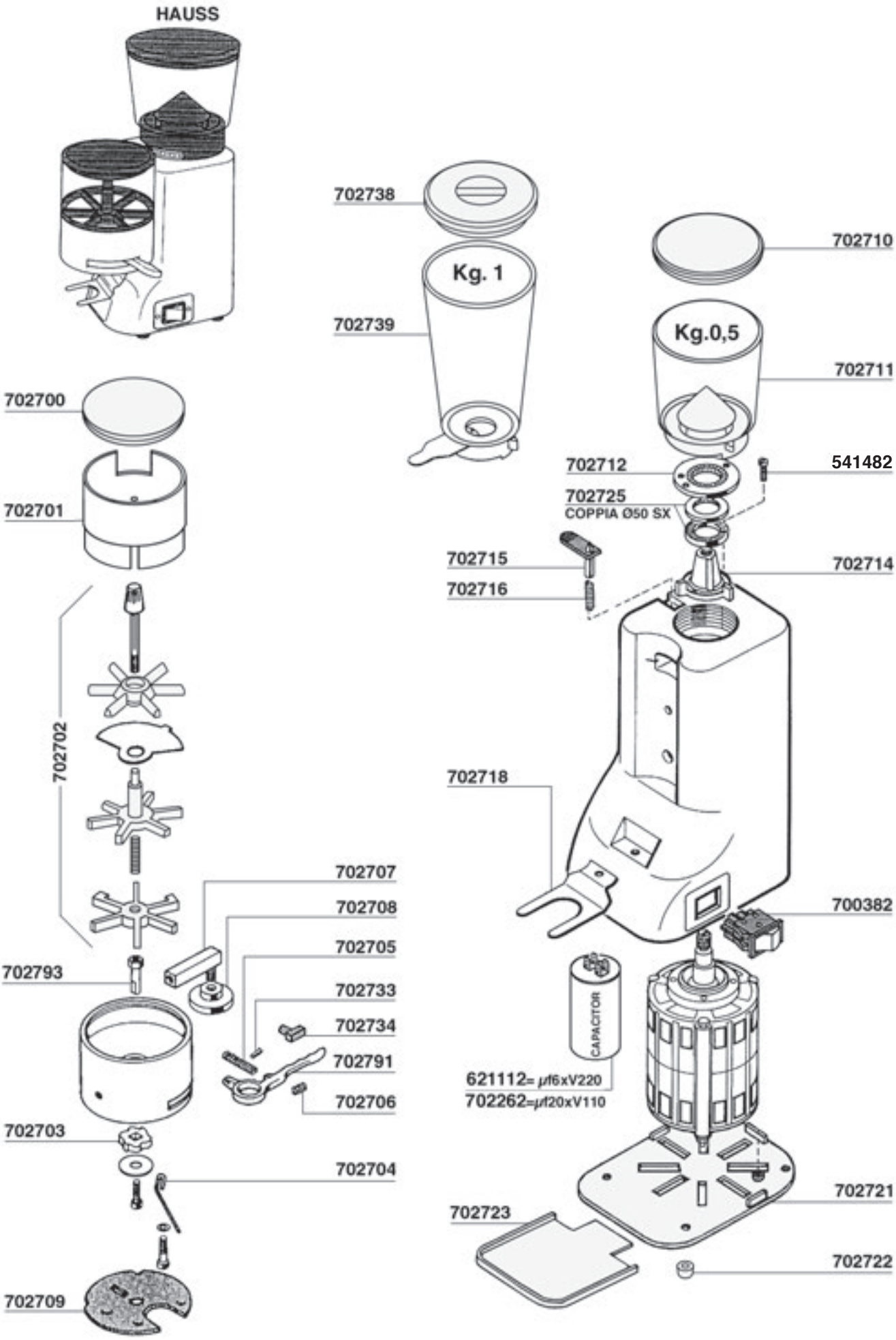

MACINACAFFE'

Tav. 02

ANFIM MODEL: HAUS SELF

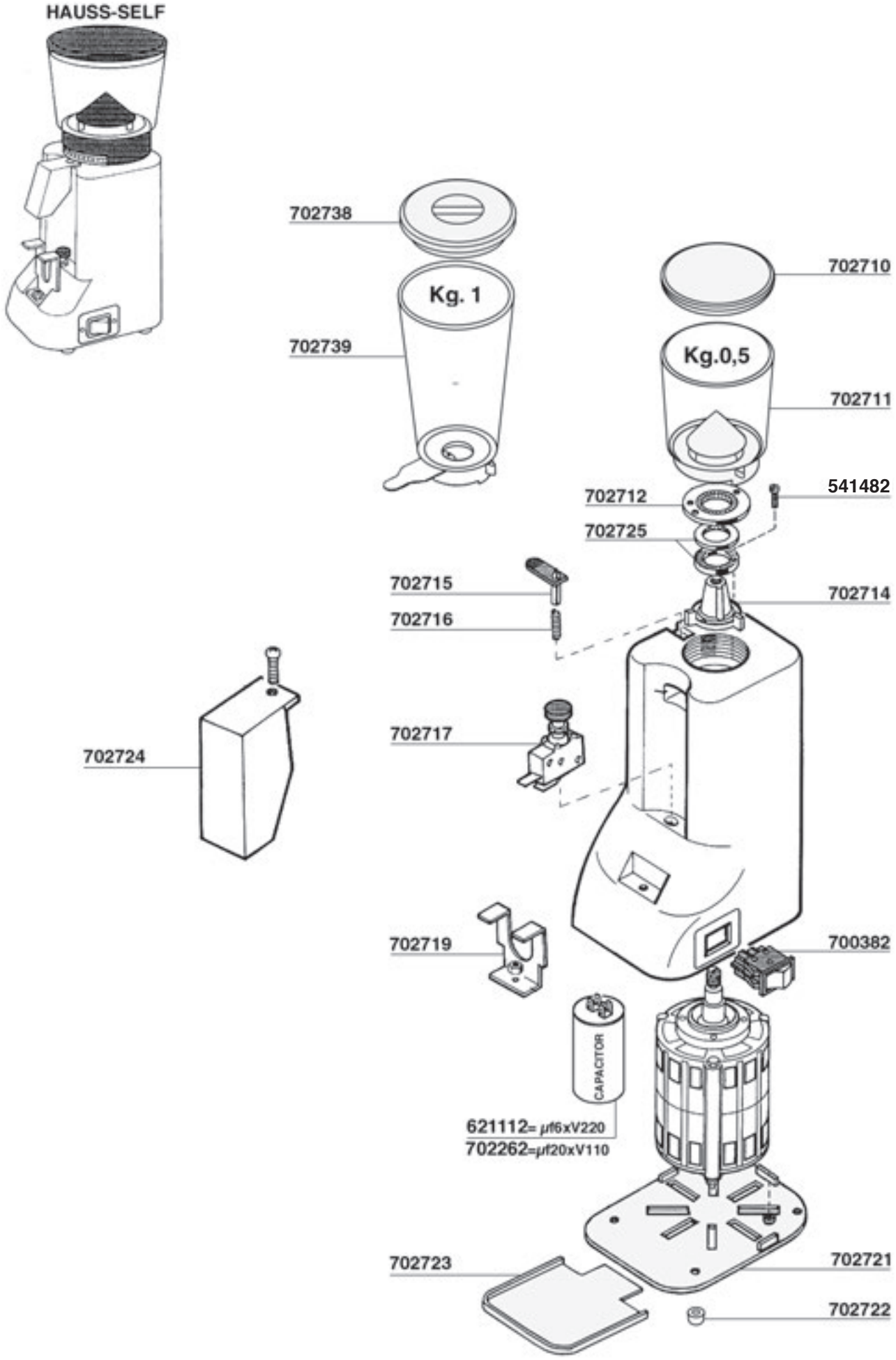

MACINACAFFE'

Tav. 03

ANFIM MODEL: BEST

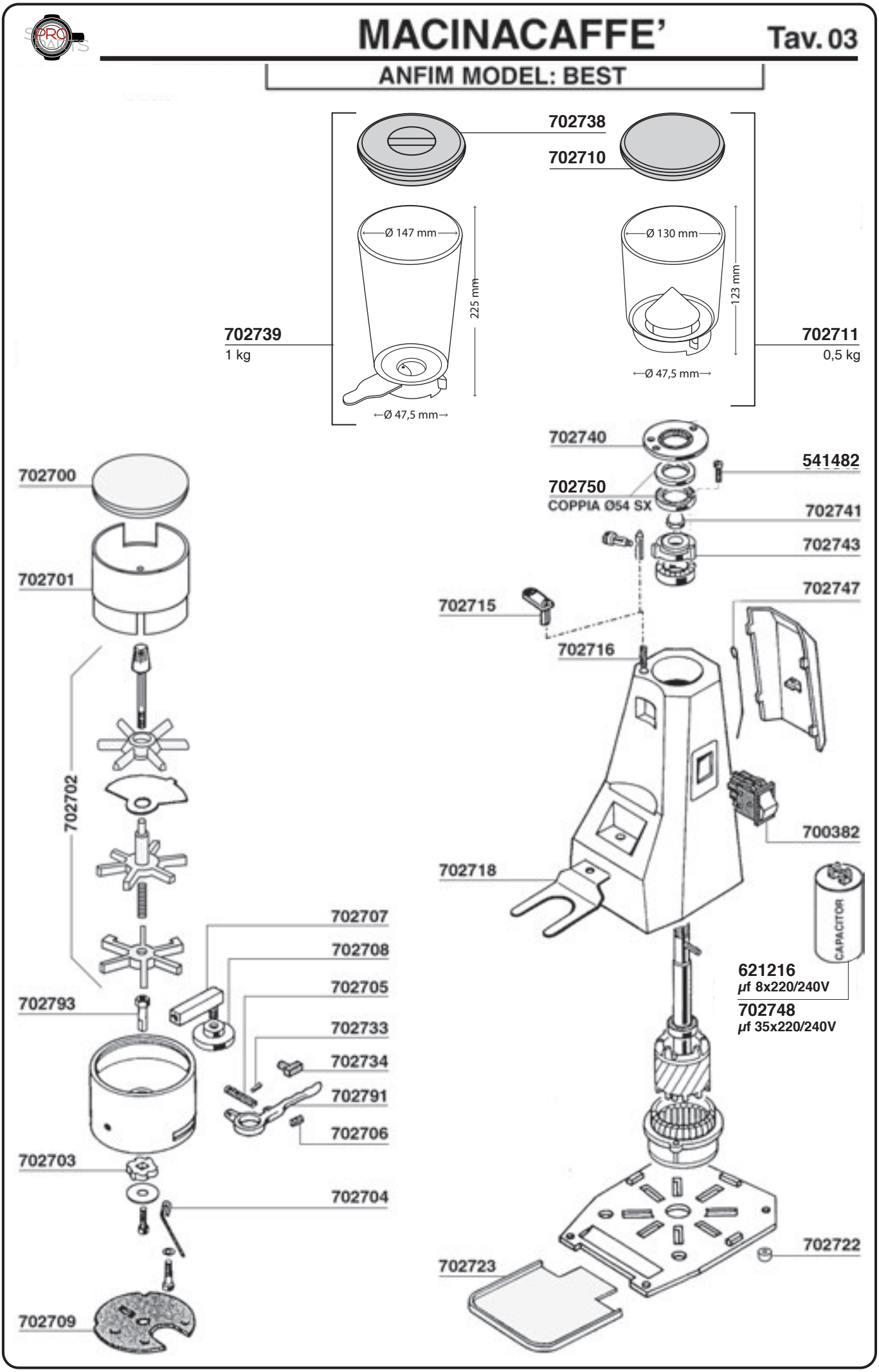

MACINACAFFE'

Tav. 04

ANFIM MODEL: SUPER BEST

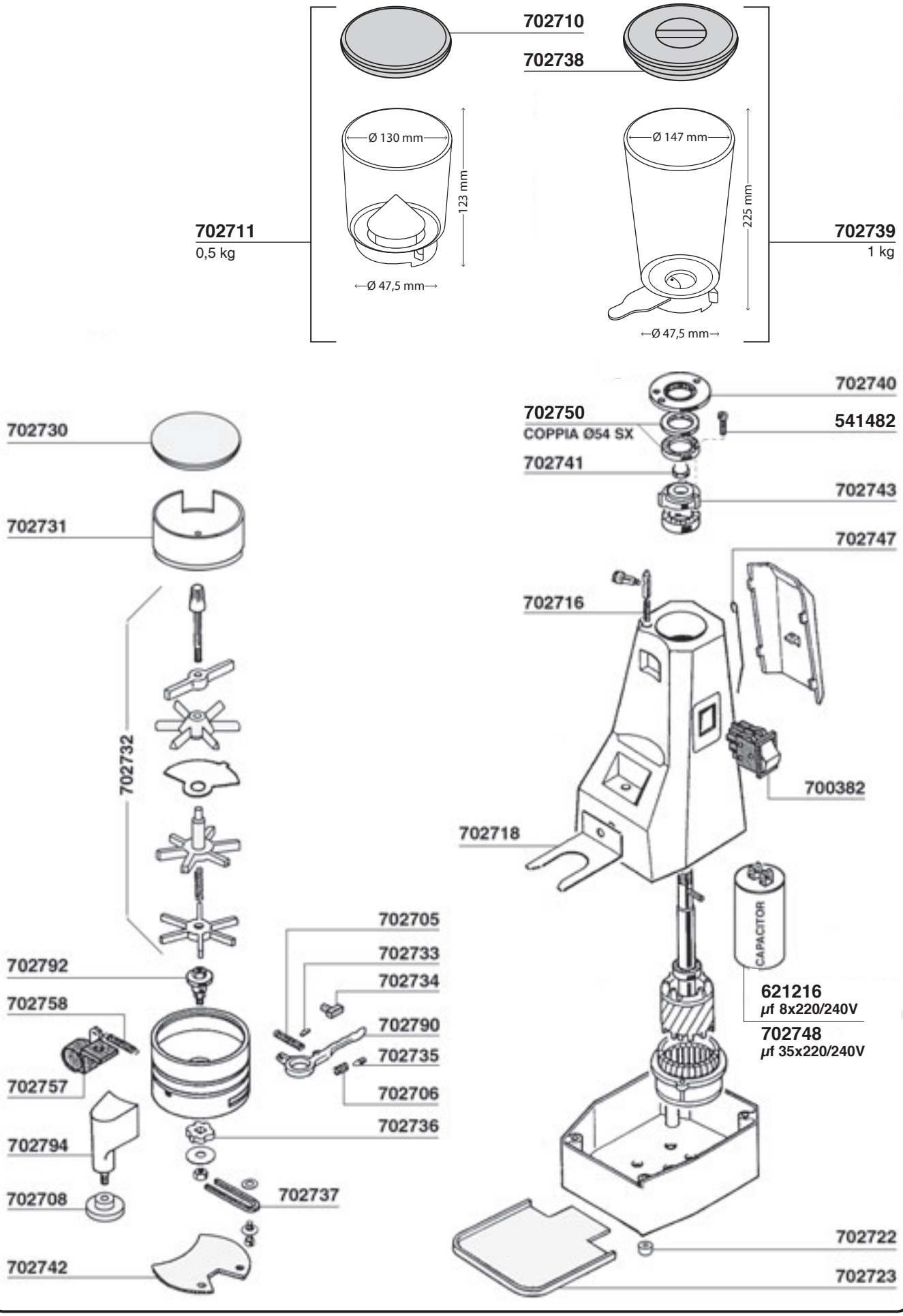

MACINACAFFE'

Tav. 05

ANFIM MODEL: LUSSO

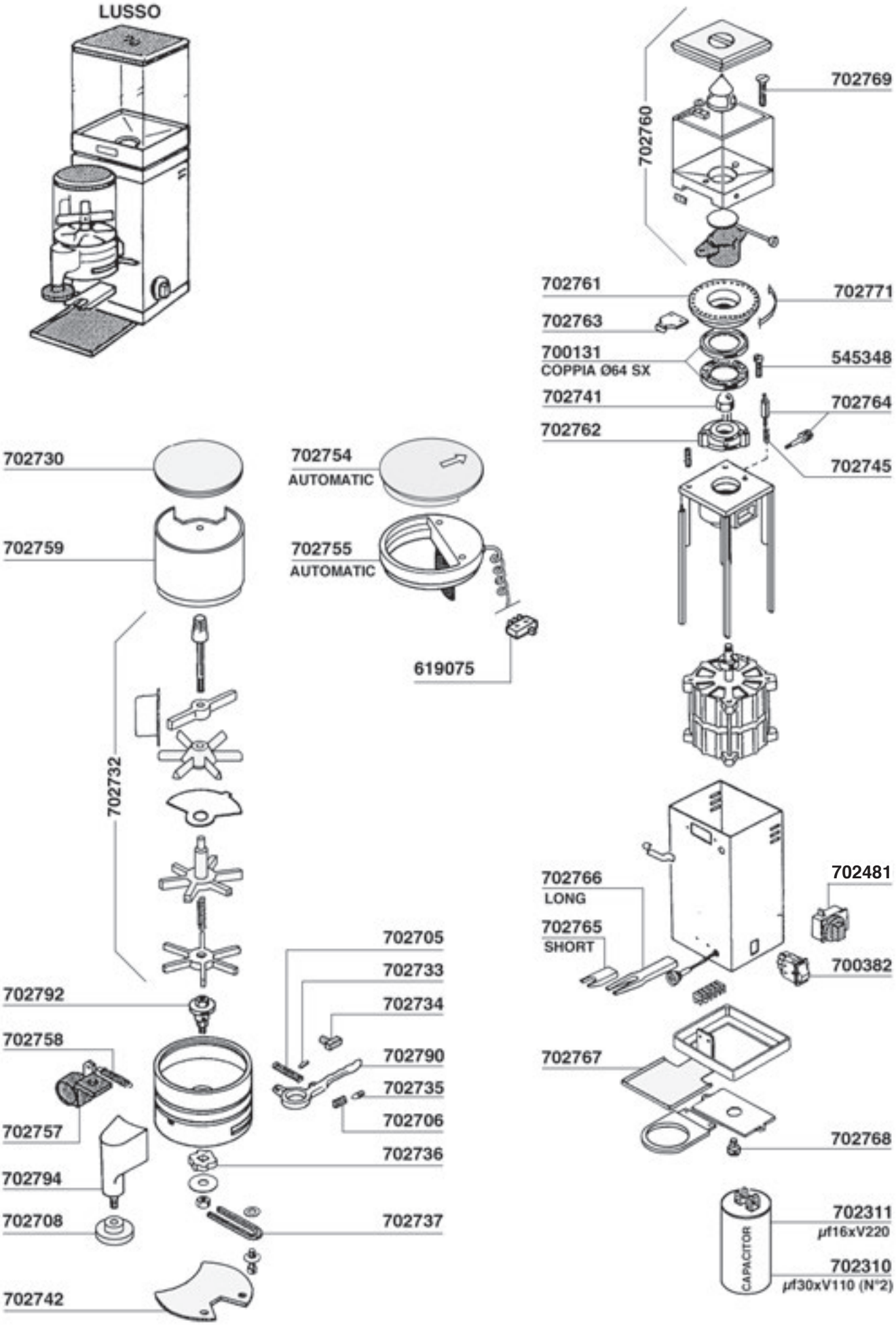

MACINACAFFE'

Tav. 06

ANFIM MODEL: SUPER LUSSO

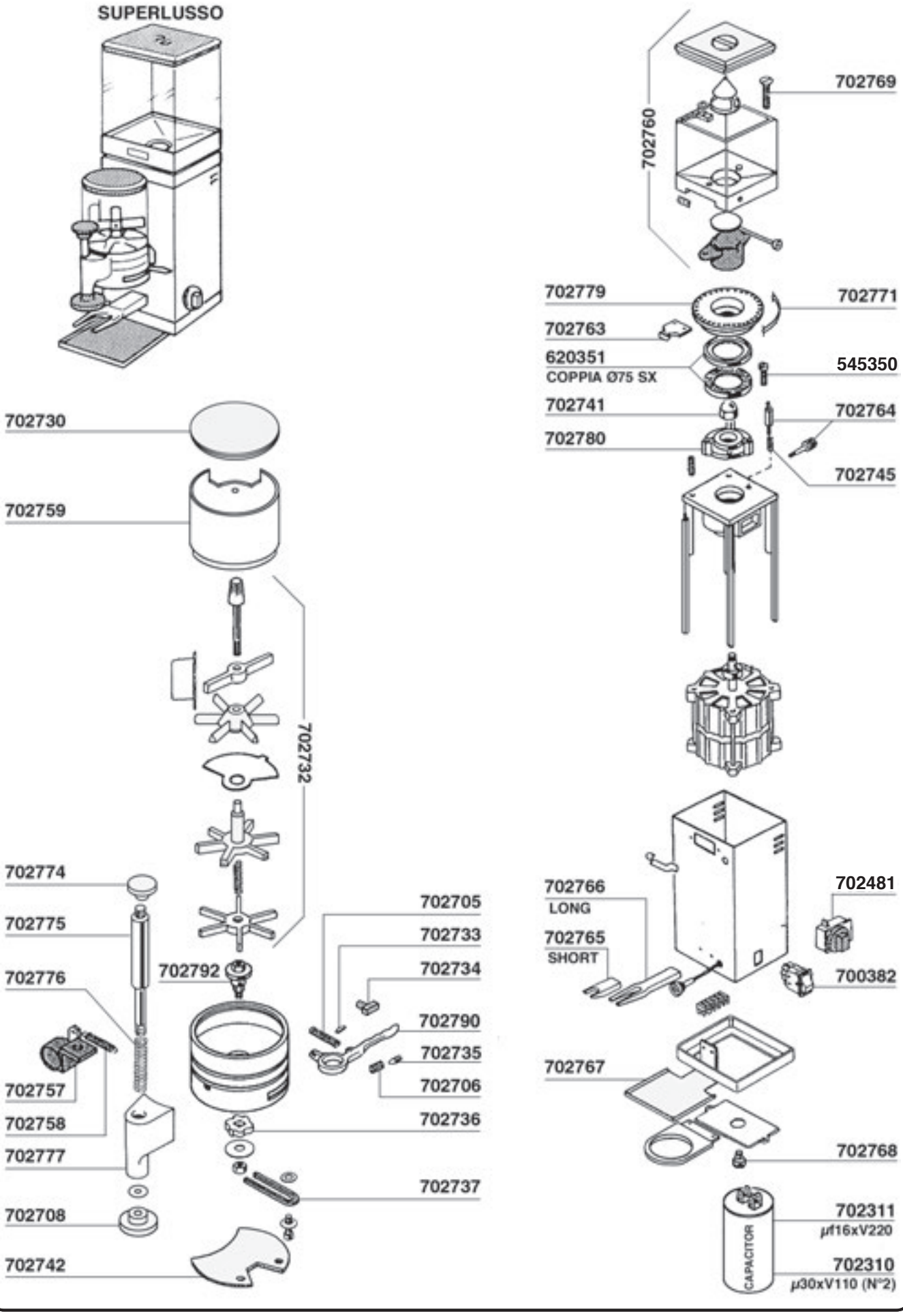

MACINACAFFE

Tav. 07

ANFIM MODEL: CAIMANO

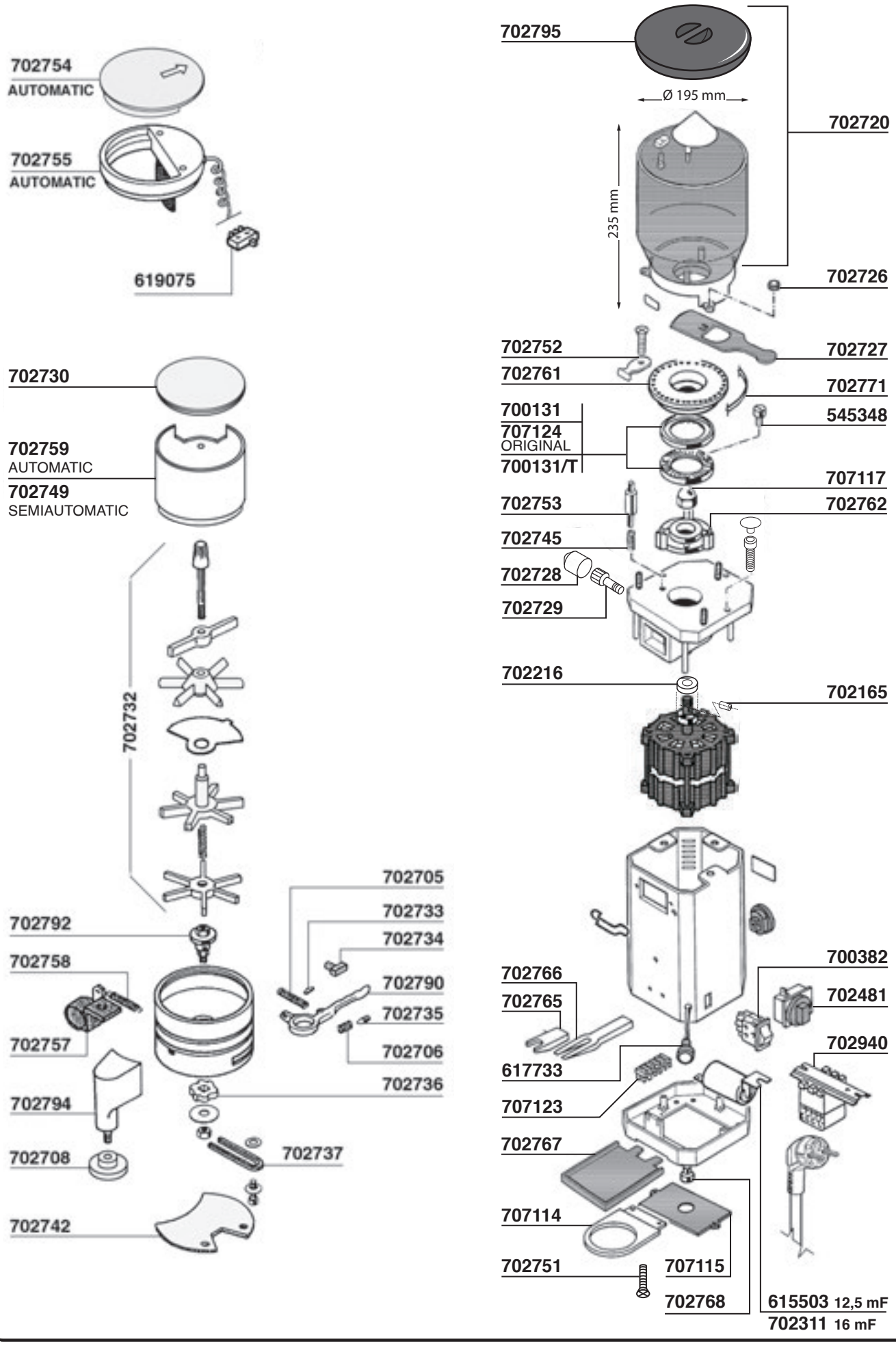

MACINACAFFE

Tav. 08

ANFIM MODEL: SUPER CAIMANO

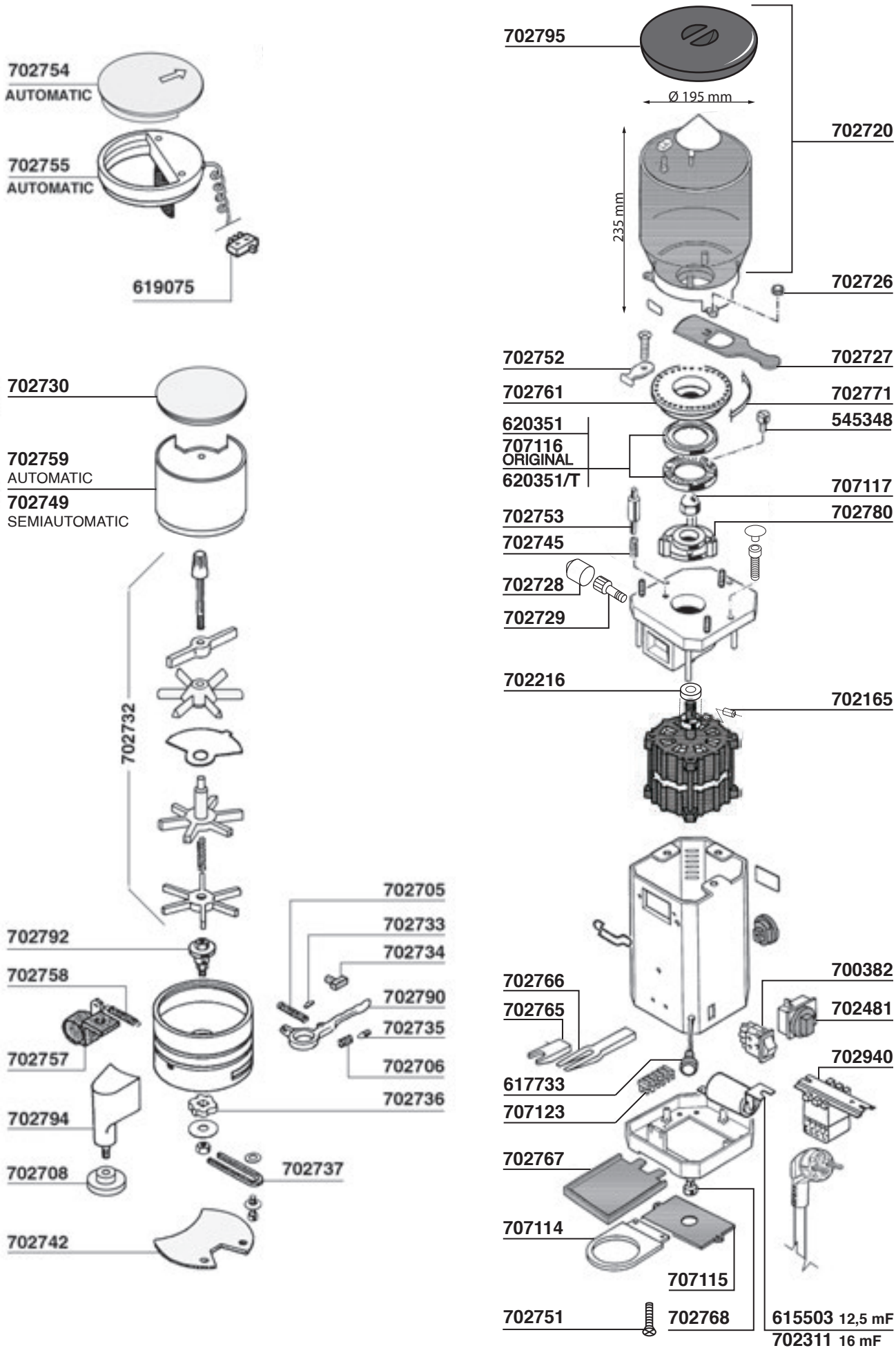

MACINACAFFE

Tav.09

ANFIM MODEL: SCODY-II

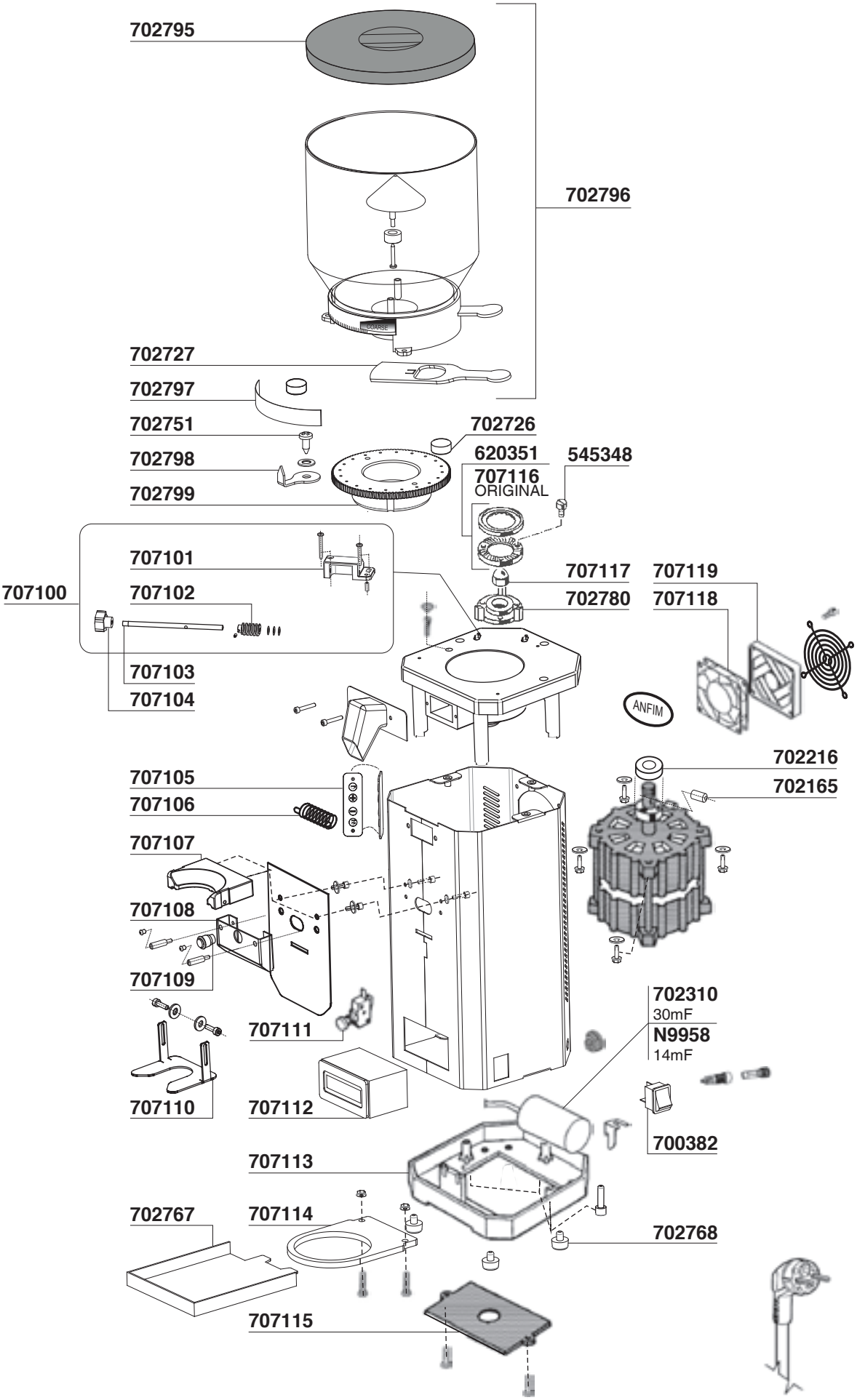

MACINACAFFE

Tav. 10

ANFIM MODEL: SP-II

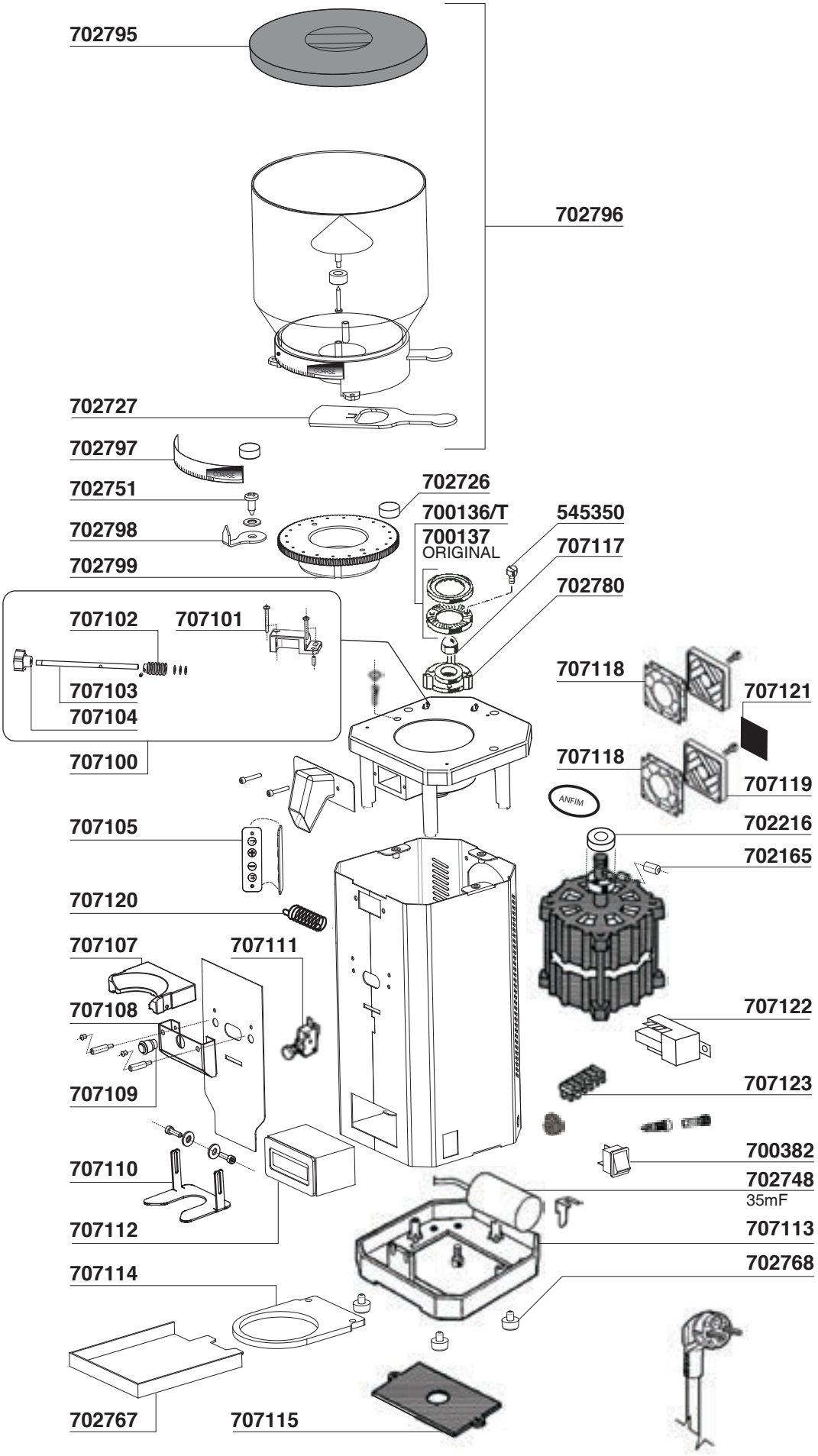

MACINACAFFE’ Tav. 11

BNZ: MD64 - MD74

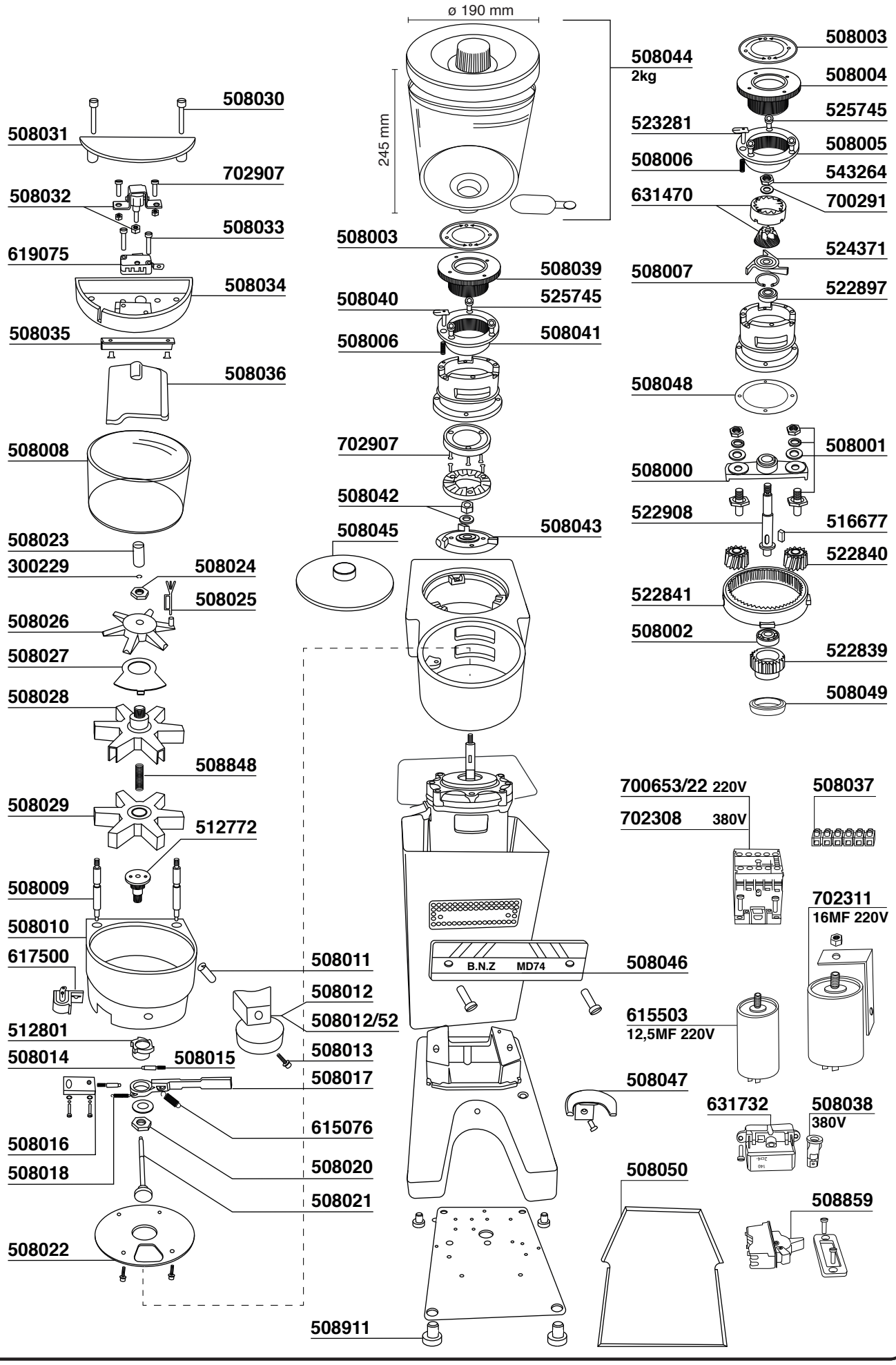

MACINACAFFE'

Tav. 12

COMPAK

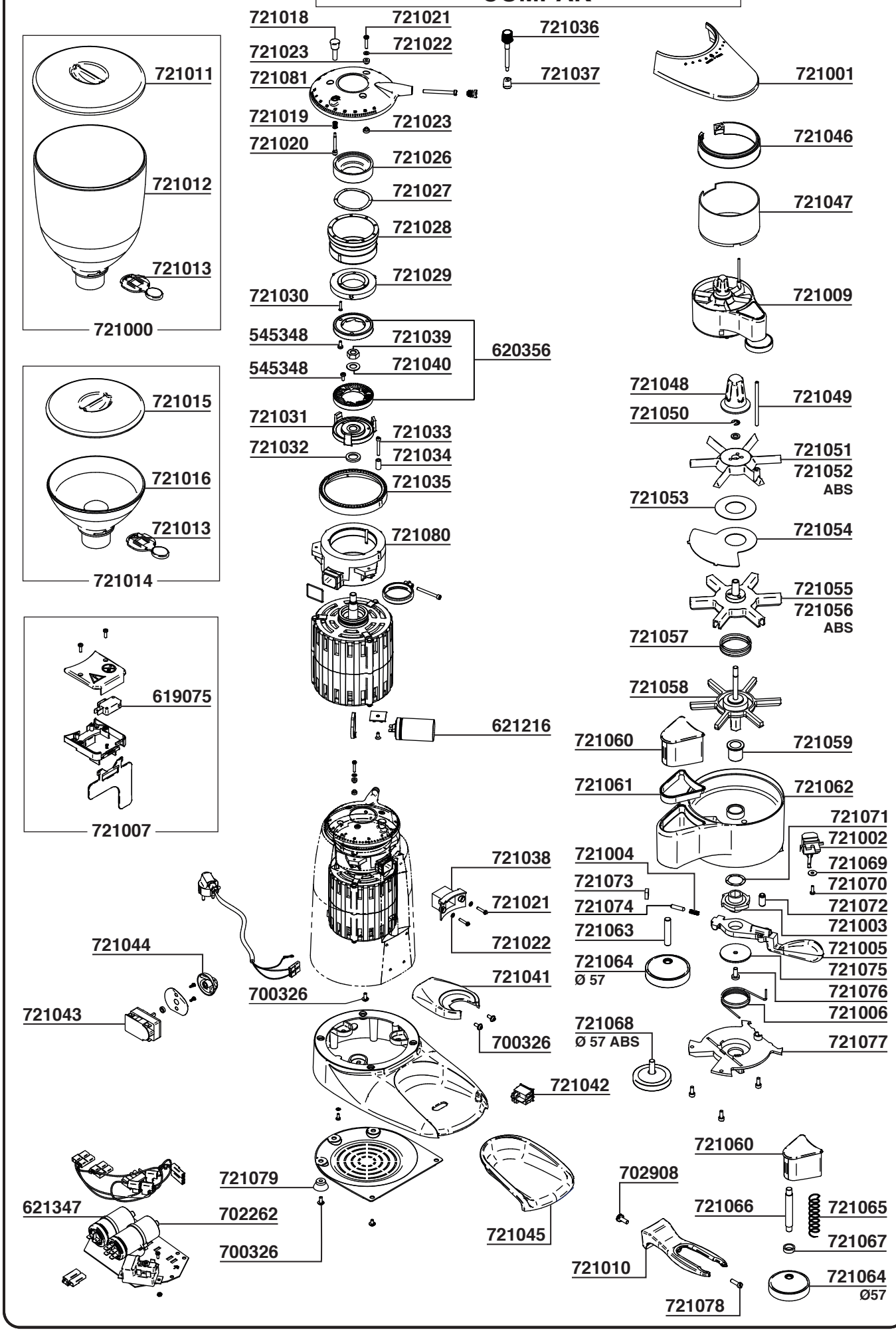

MACINACAFFE'

Tav. 13

EUREKA MODEL MDM - MDMCA - MDME - MDMEA

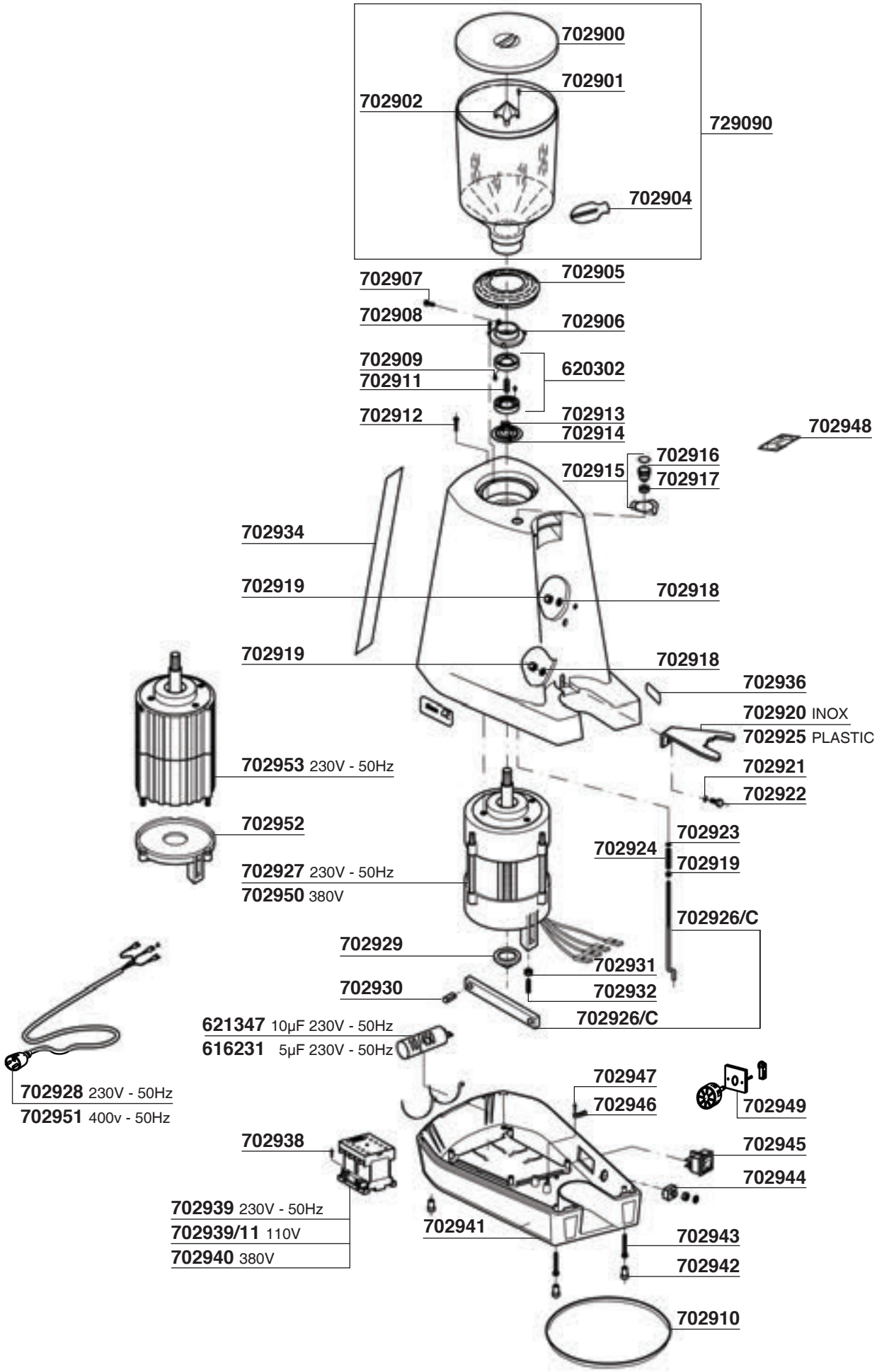

MACINACAFFE'

Tav. 14

EUREKA MODEL: MDM - MDMCA - MDME - MDMEA

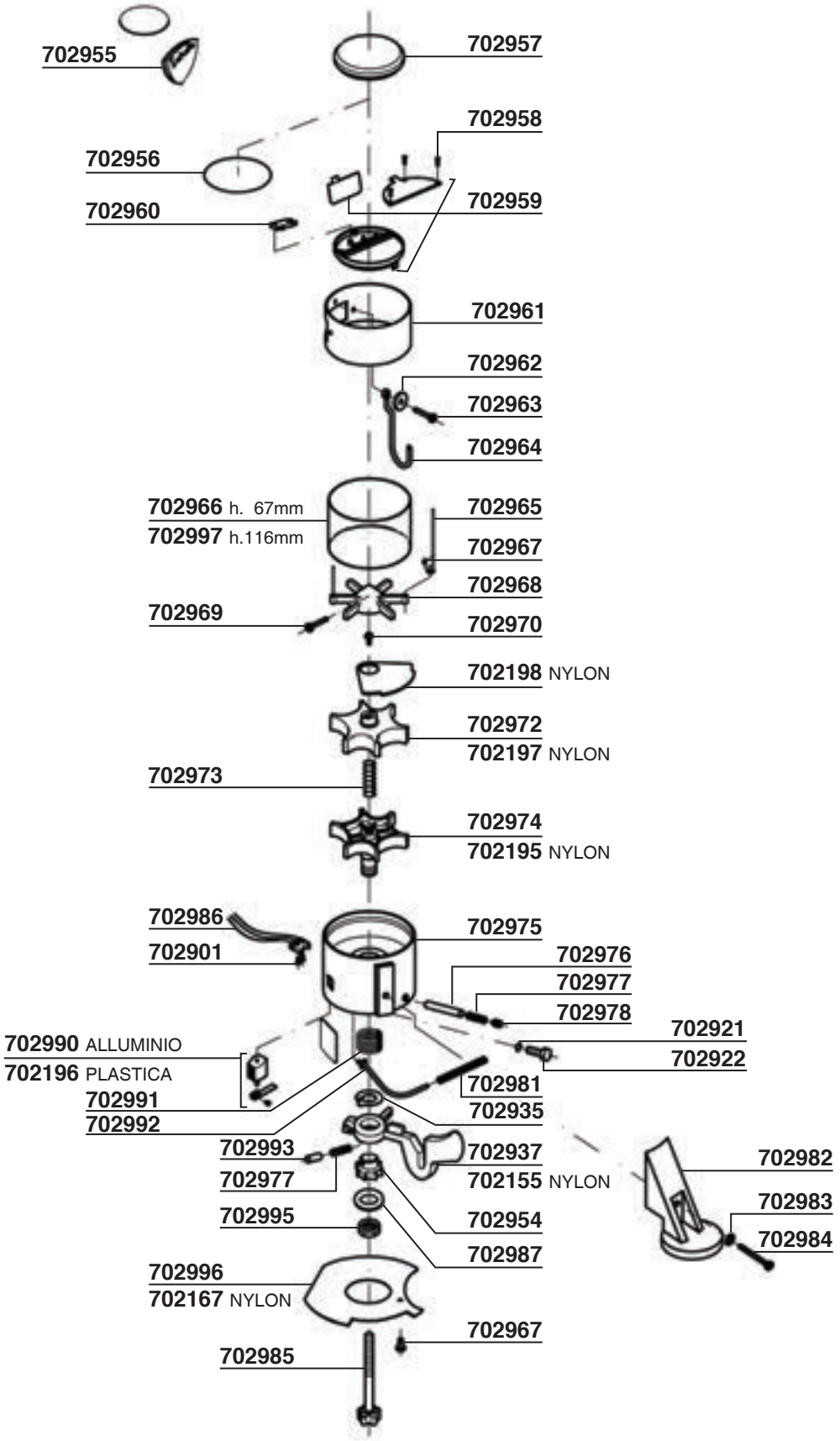

MACINACAFFE'

Tav. 15

EUREKA MODEL MCF

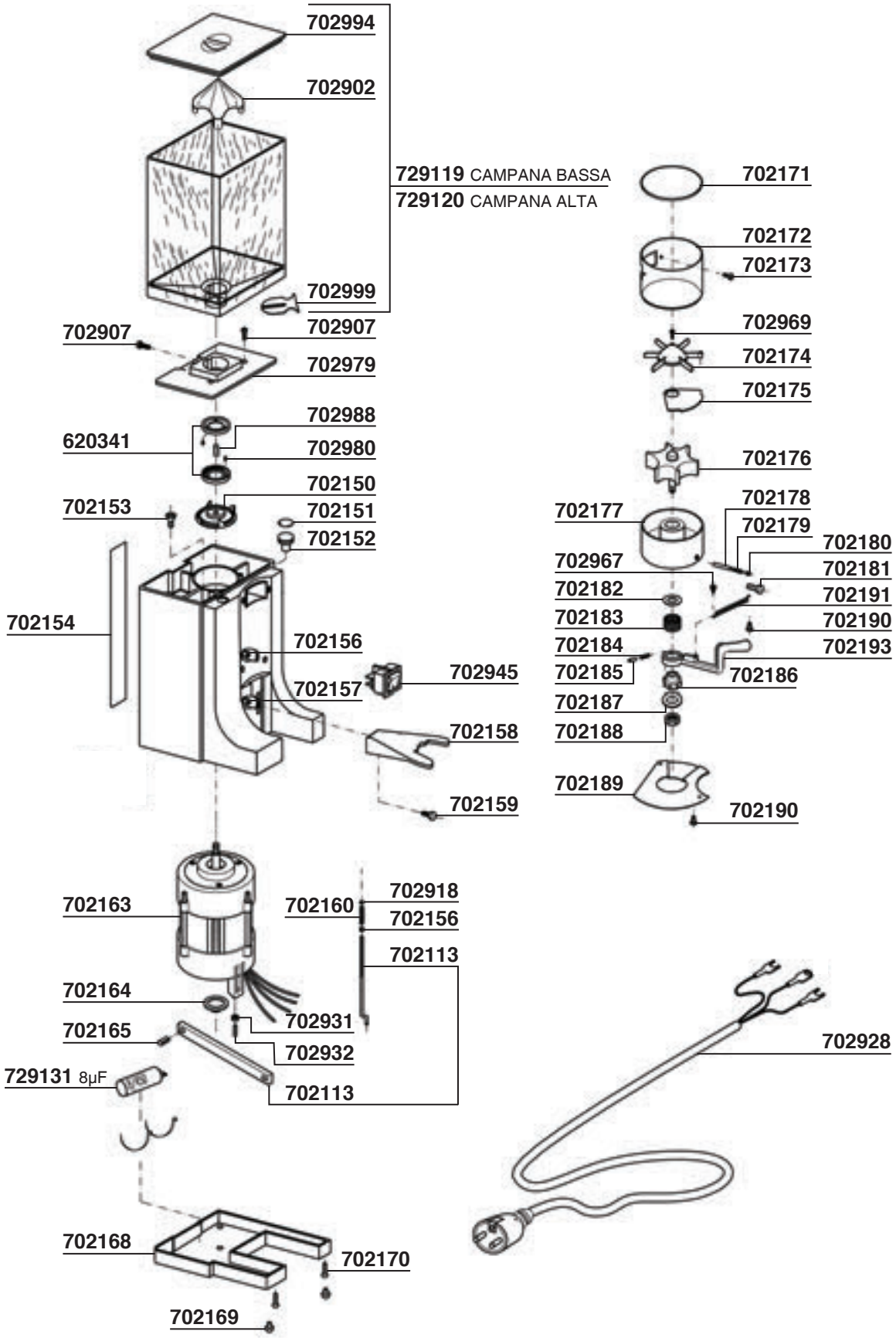

MACINACAFFE’ Tav. 16

EUREKA MODEL: MYTHOS

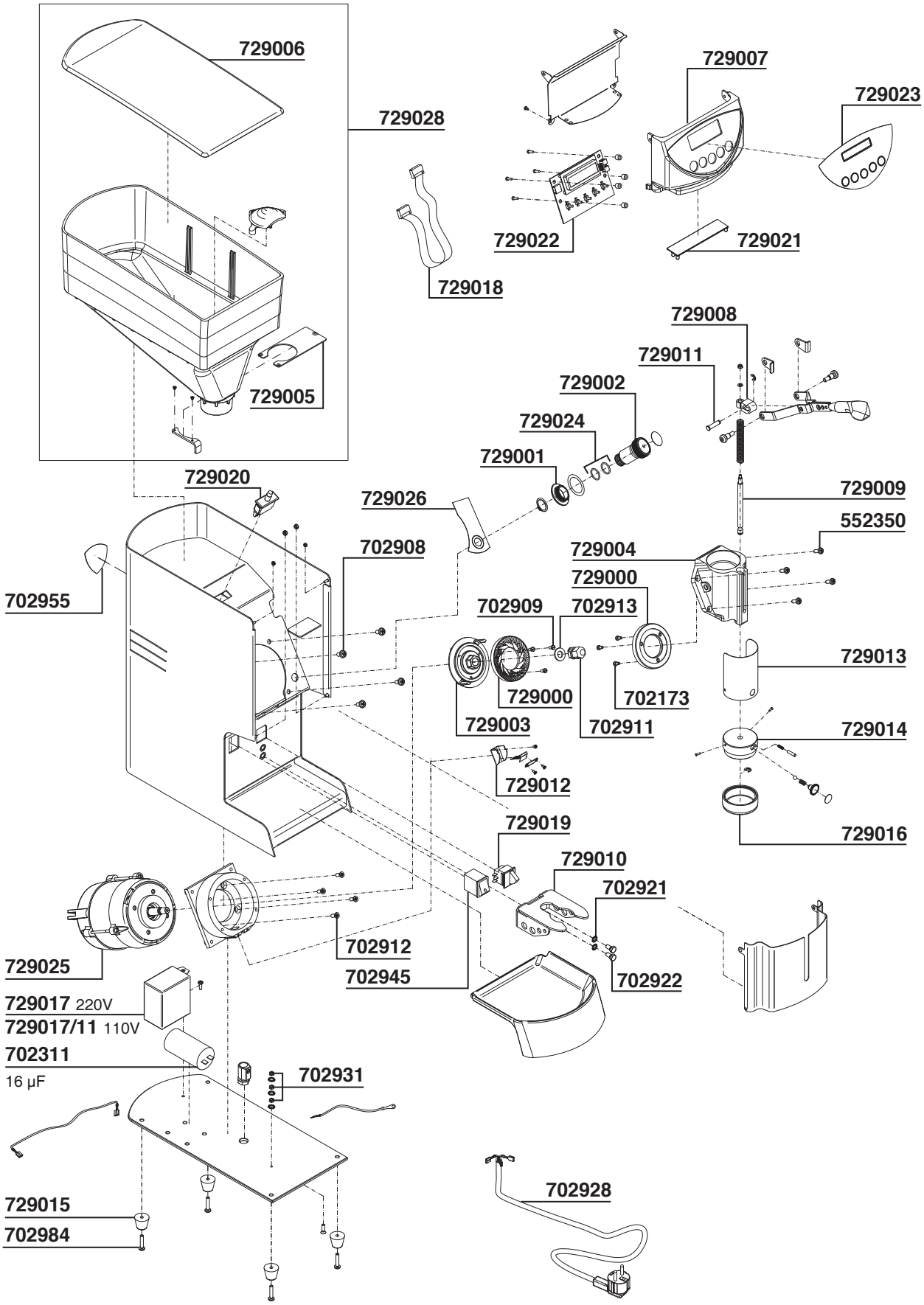

MACINACAFFE'

Tav. 17

EUREKA MODEL: OLYMPUS

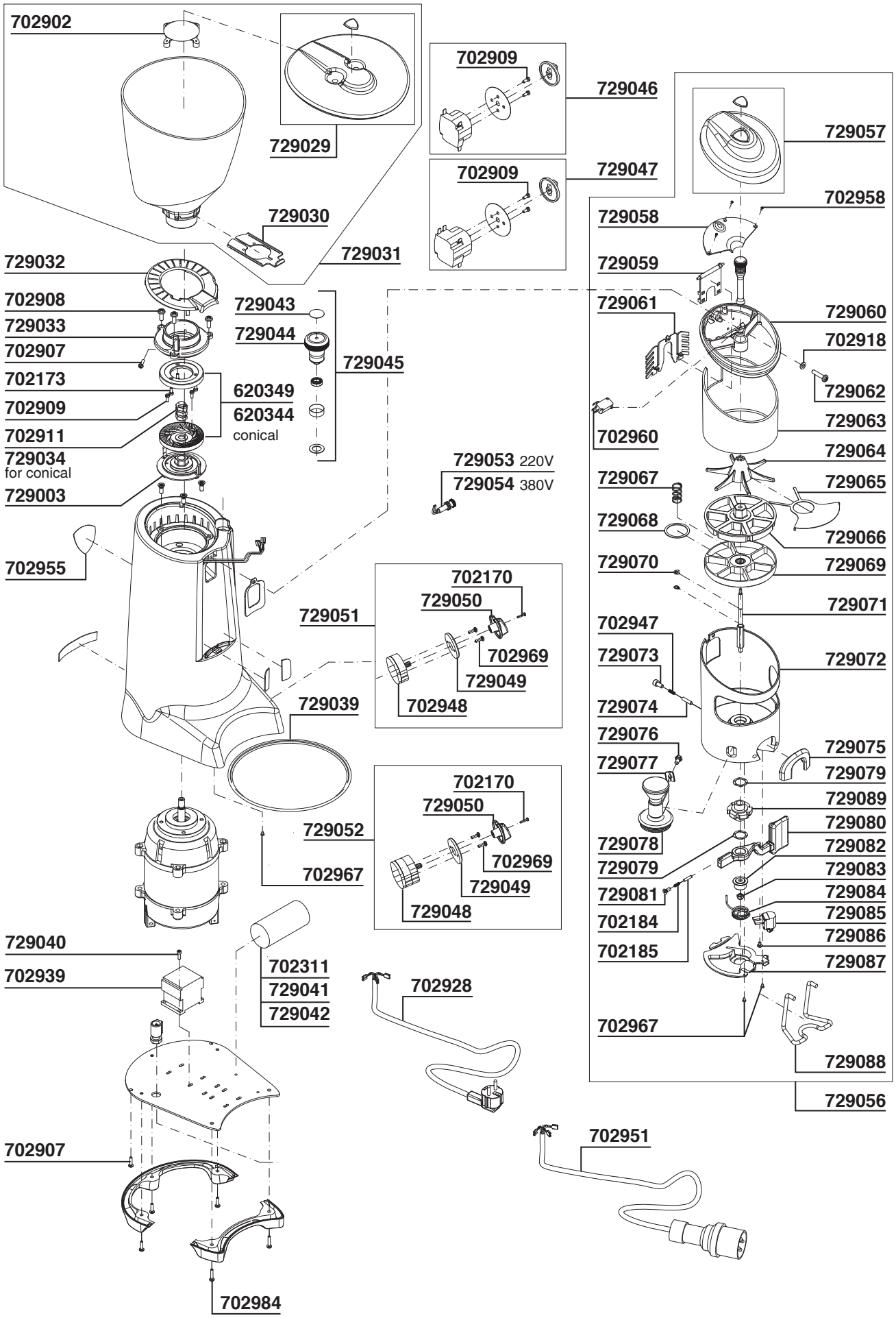

MACINACAFFE'

Tav. 18

EUREKA MODEL: FASHION

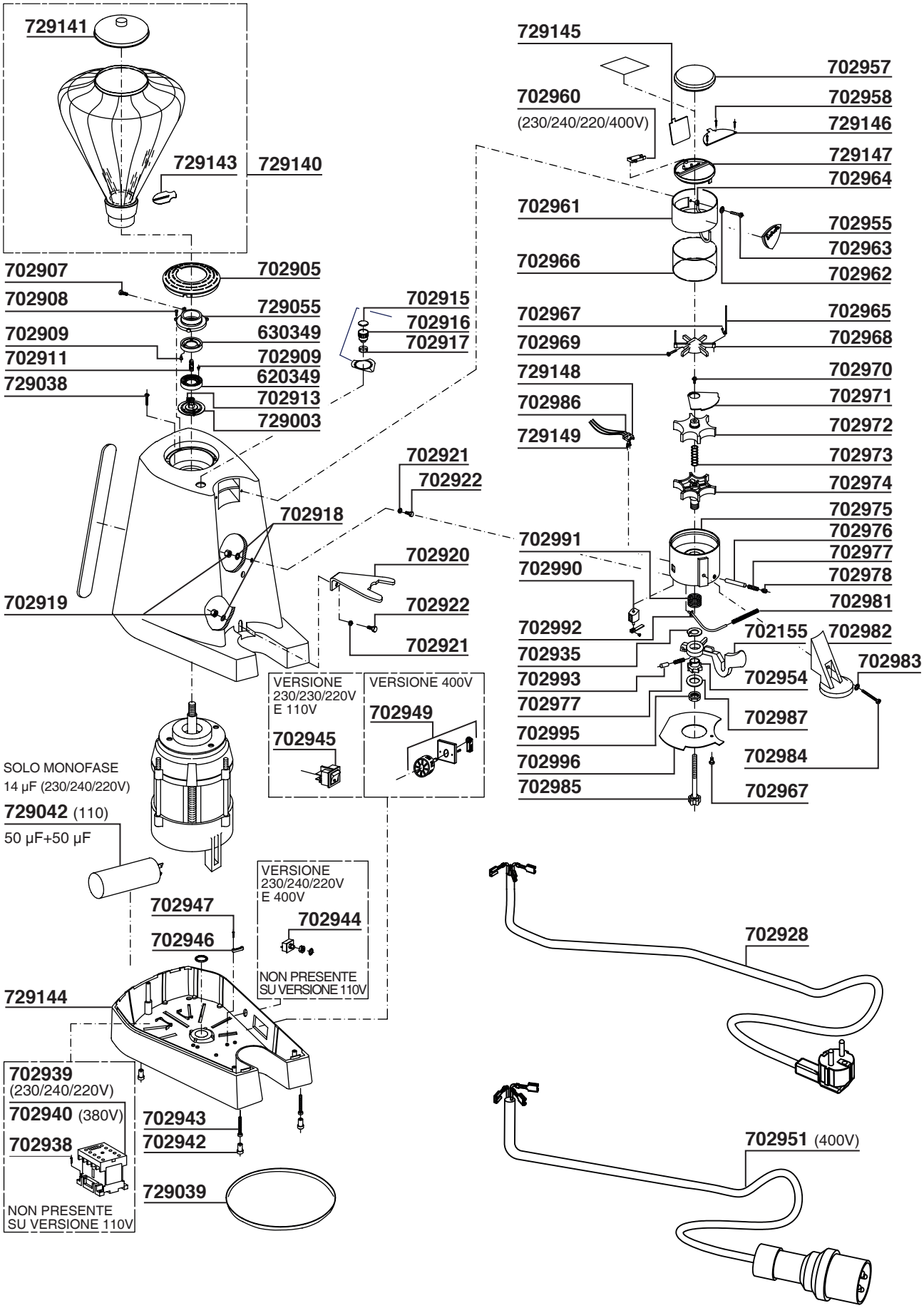

EUREKA MODEL: MIGNON ISTANTANEO

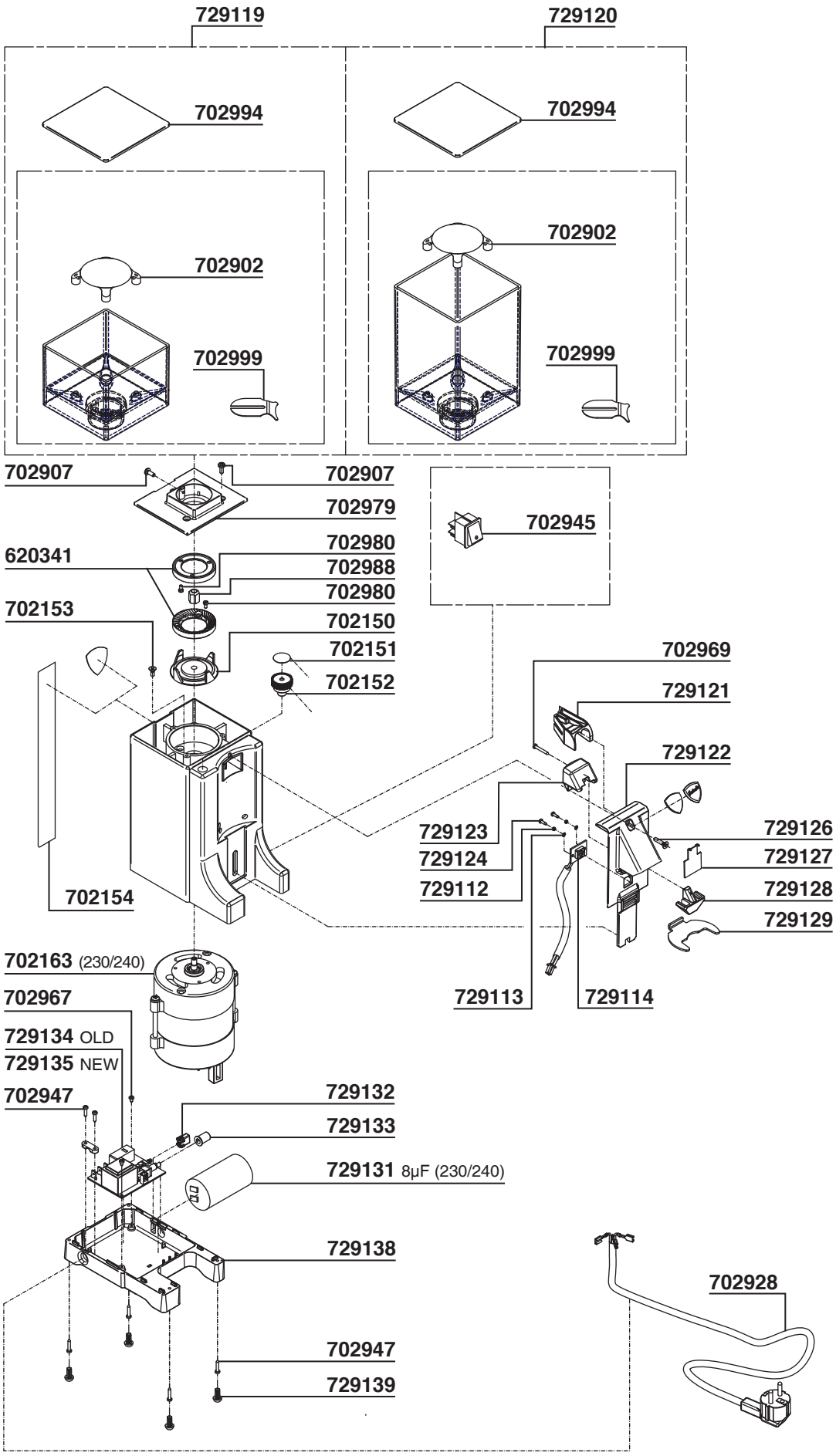

MACINACAFFE'

Tav.20

EUREKA MODEL: ZENITH

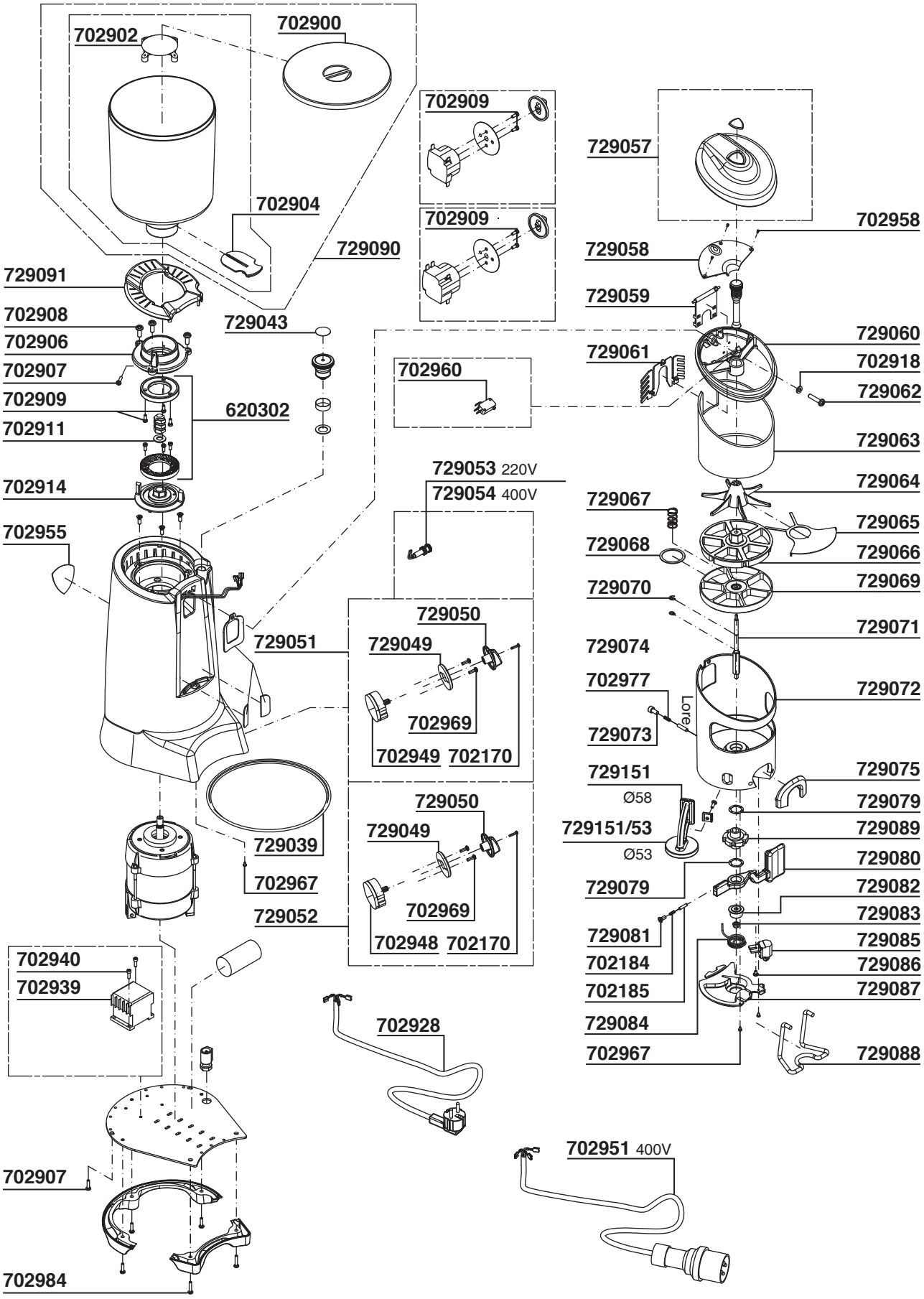

MACINACAFFE’ Tav. 21

EUREKA MODEL: ZENITH ELETTRONICO

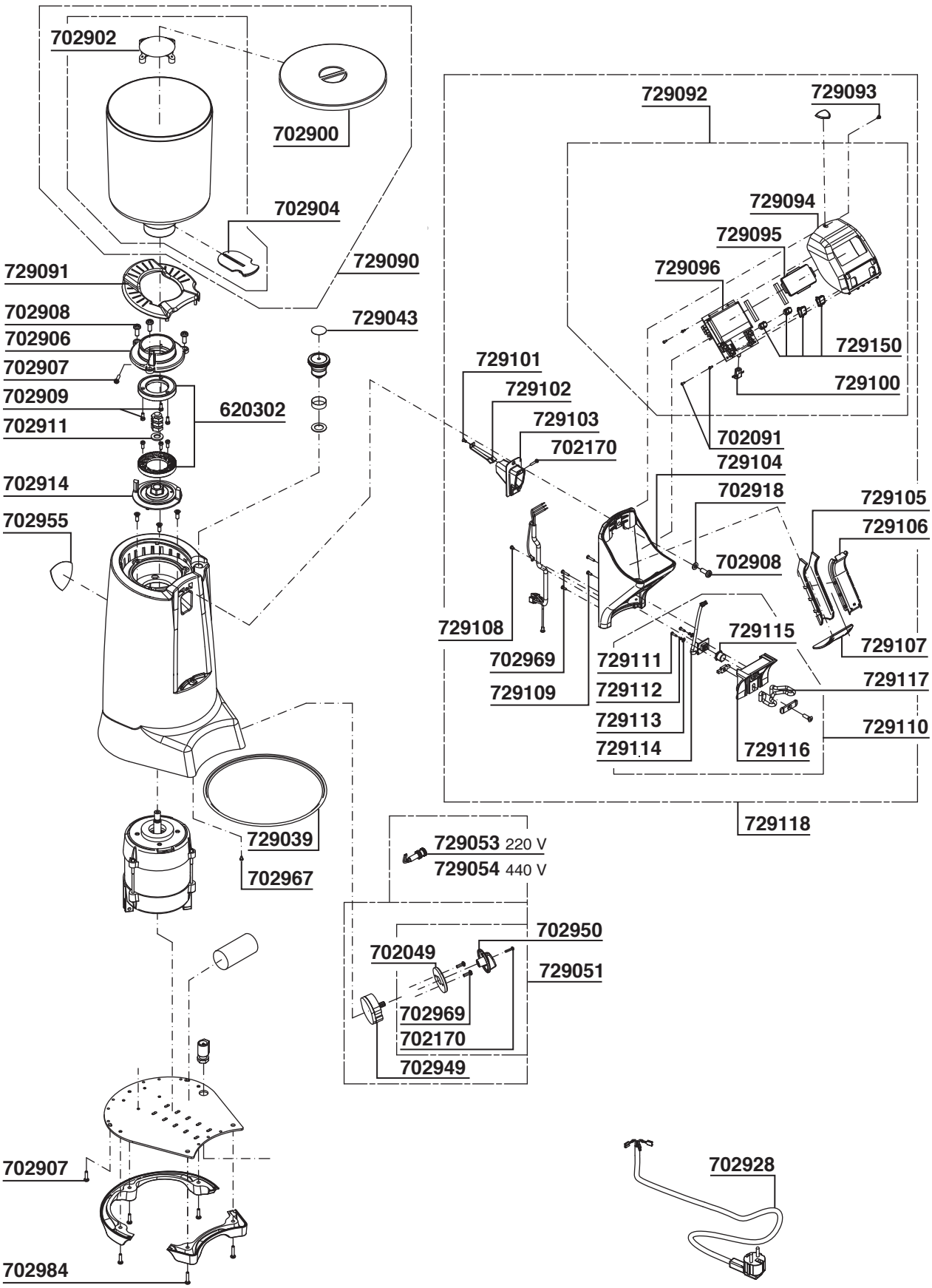

MACINACAFFE'

Tav. 22

PARTI COMPATIBILI FAEMA

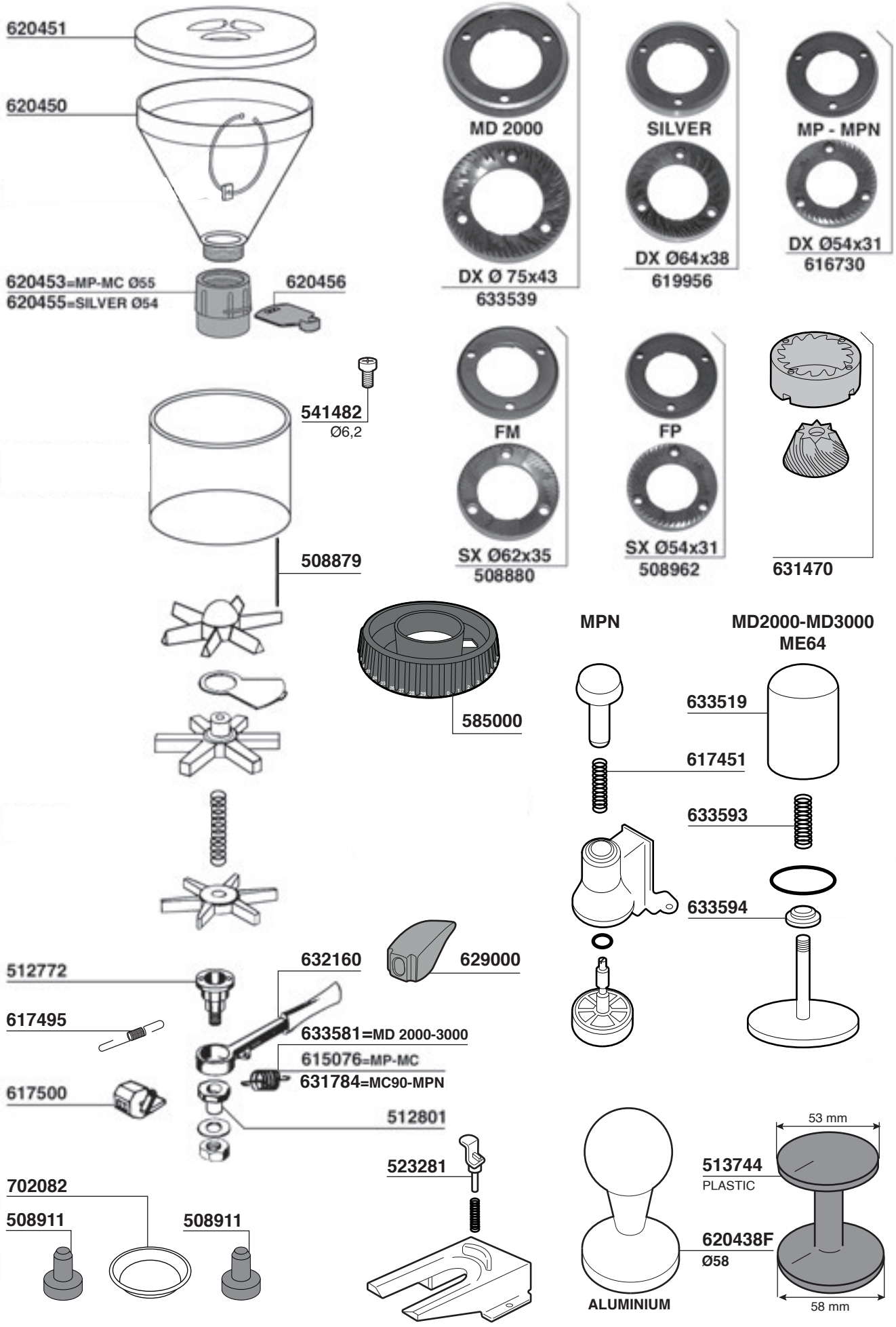

MACINACAFFE'

Tav. 23

PARTI COMPATIBILI FAEMA

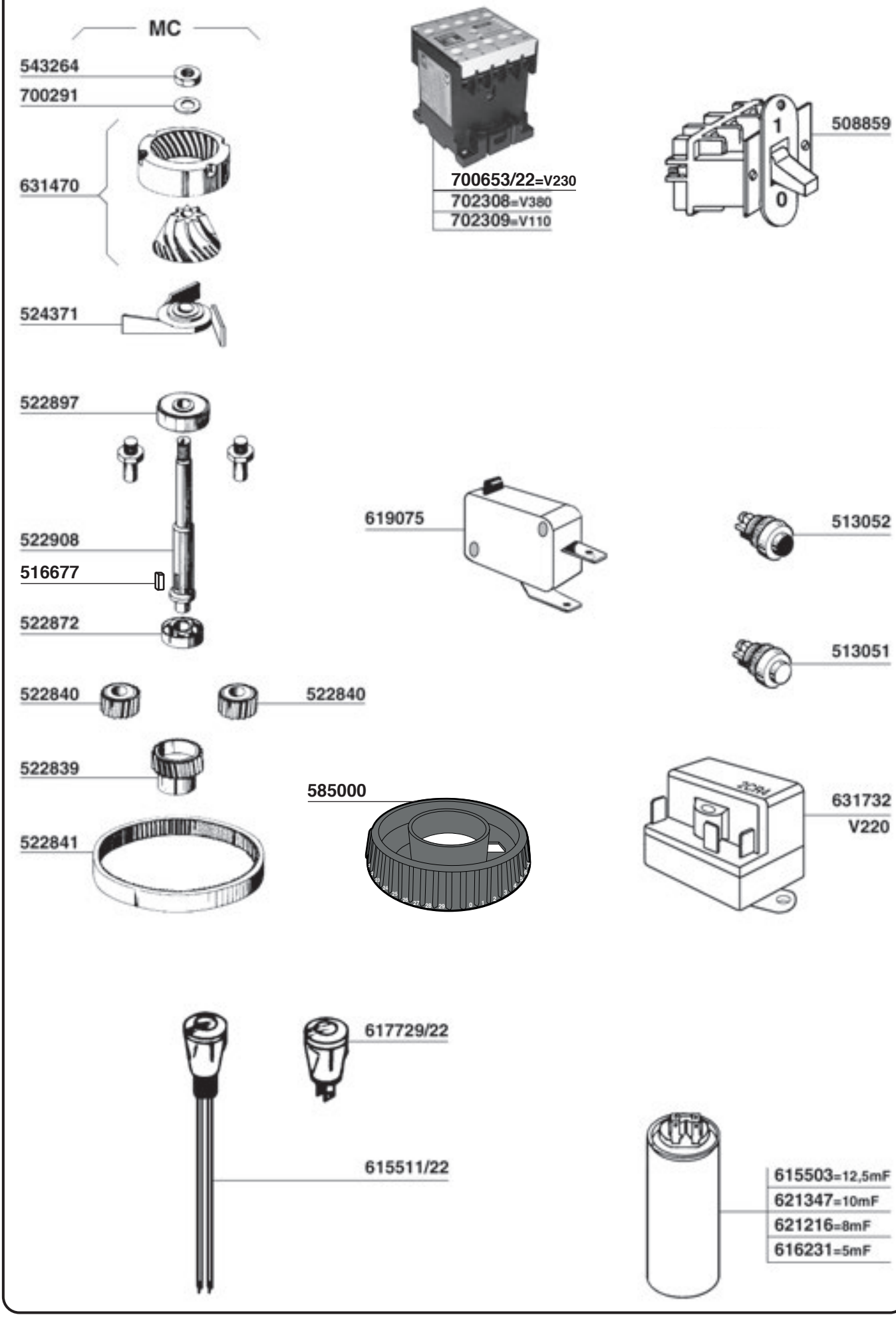

MACINACAFFE'

Tav. 24

FIORENZATO MC MODEL: F5 - F6

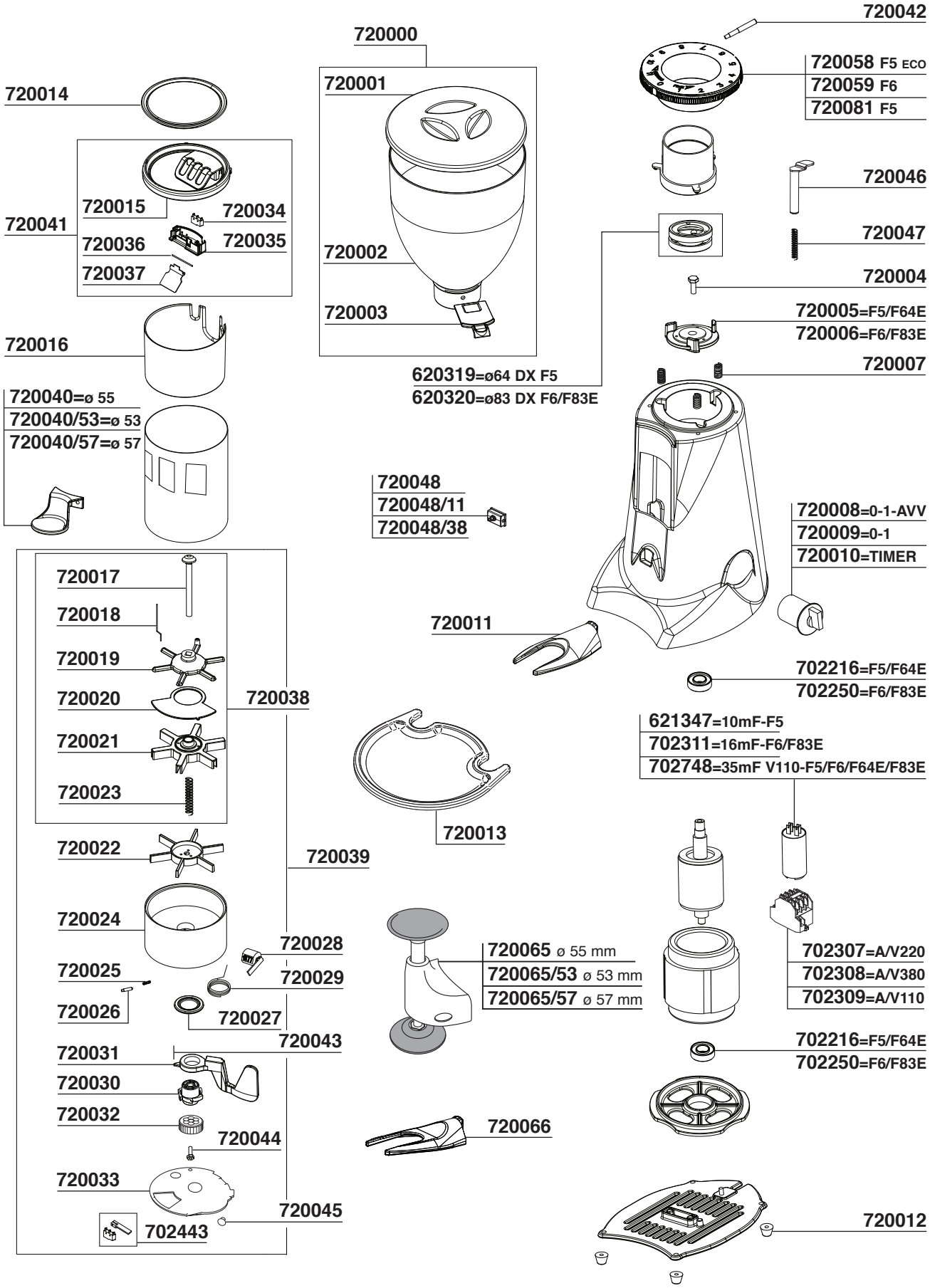

MACINACAFFE'

Tav. 25

FIORENZATO MC MODEL: F64E - F64EVO - F83E

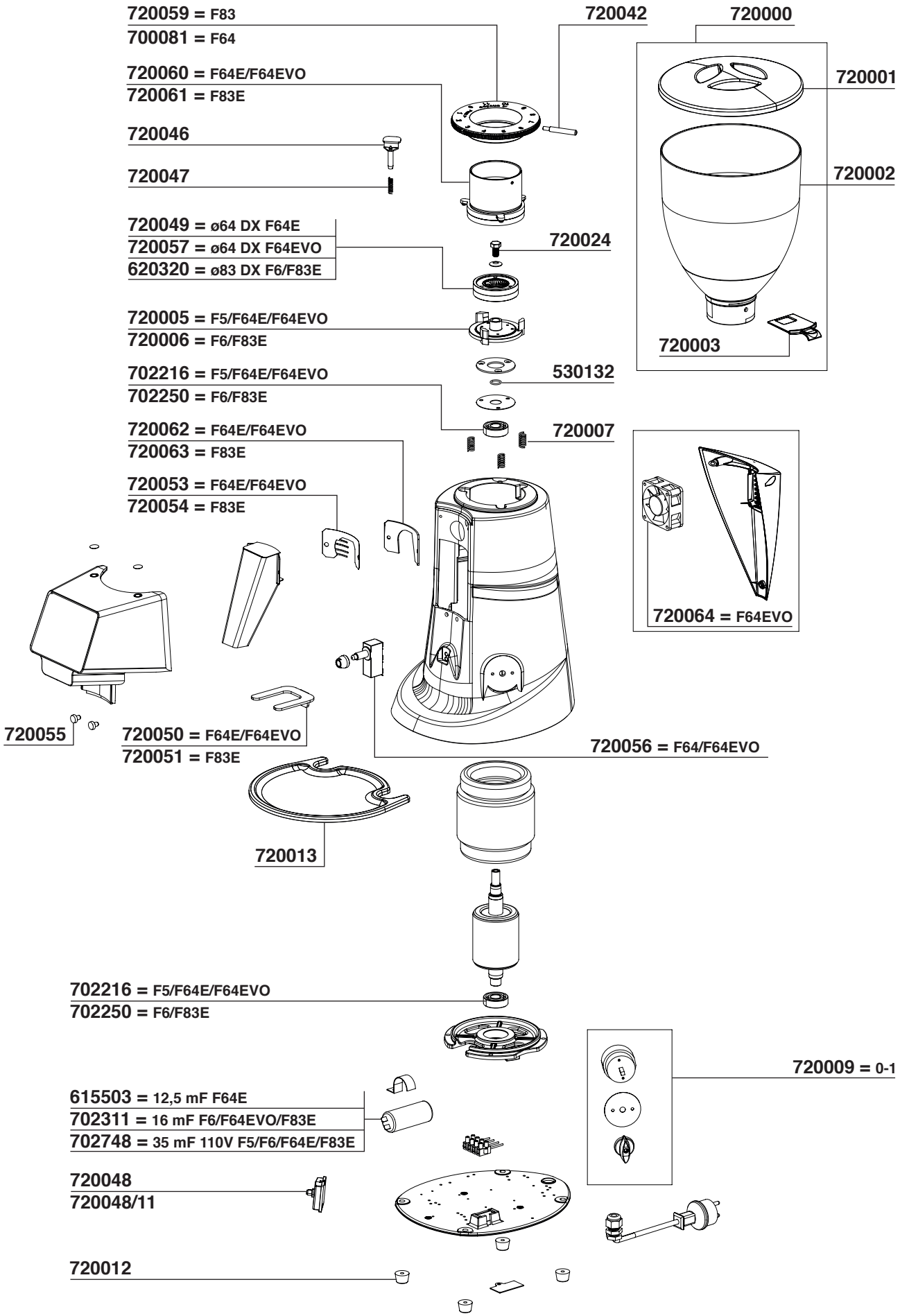

MACINACAFFE'

Tav. 26

H5

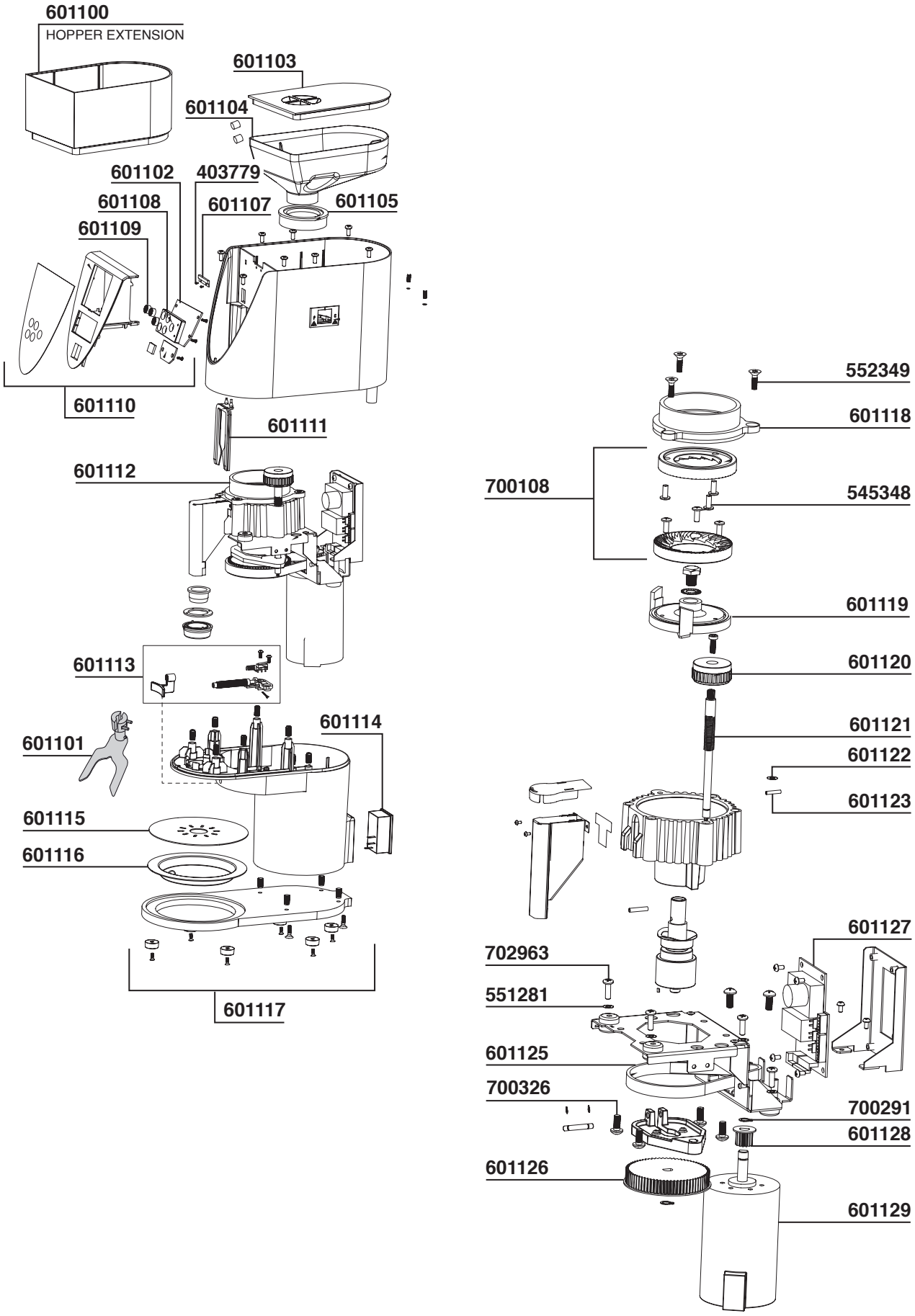

MACINACAFFE'

Tav. 27

HC 600

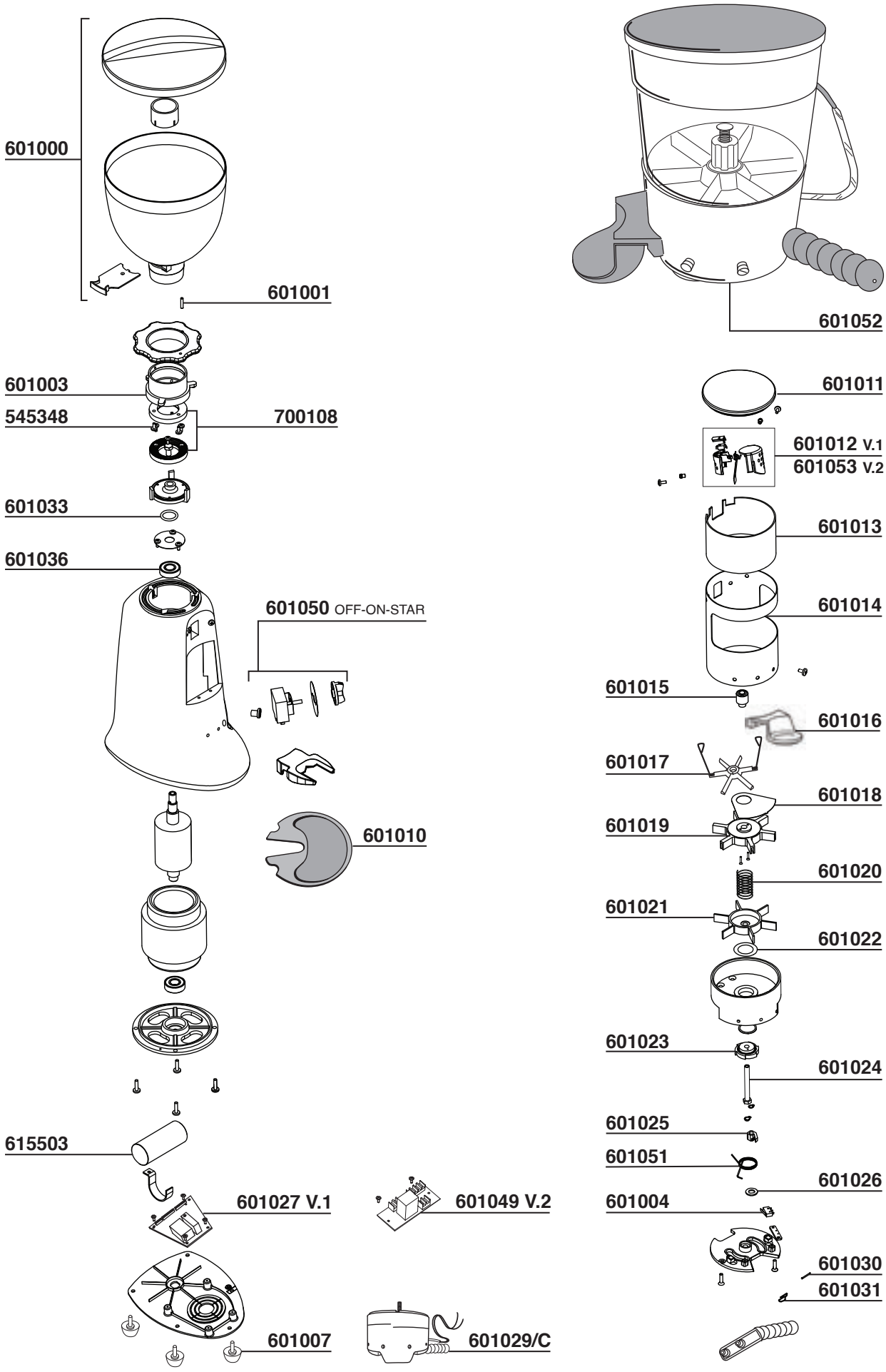

MACINACAFFE'

Tav. 28

HC 700

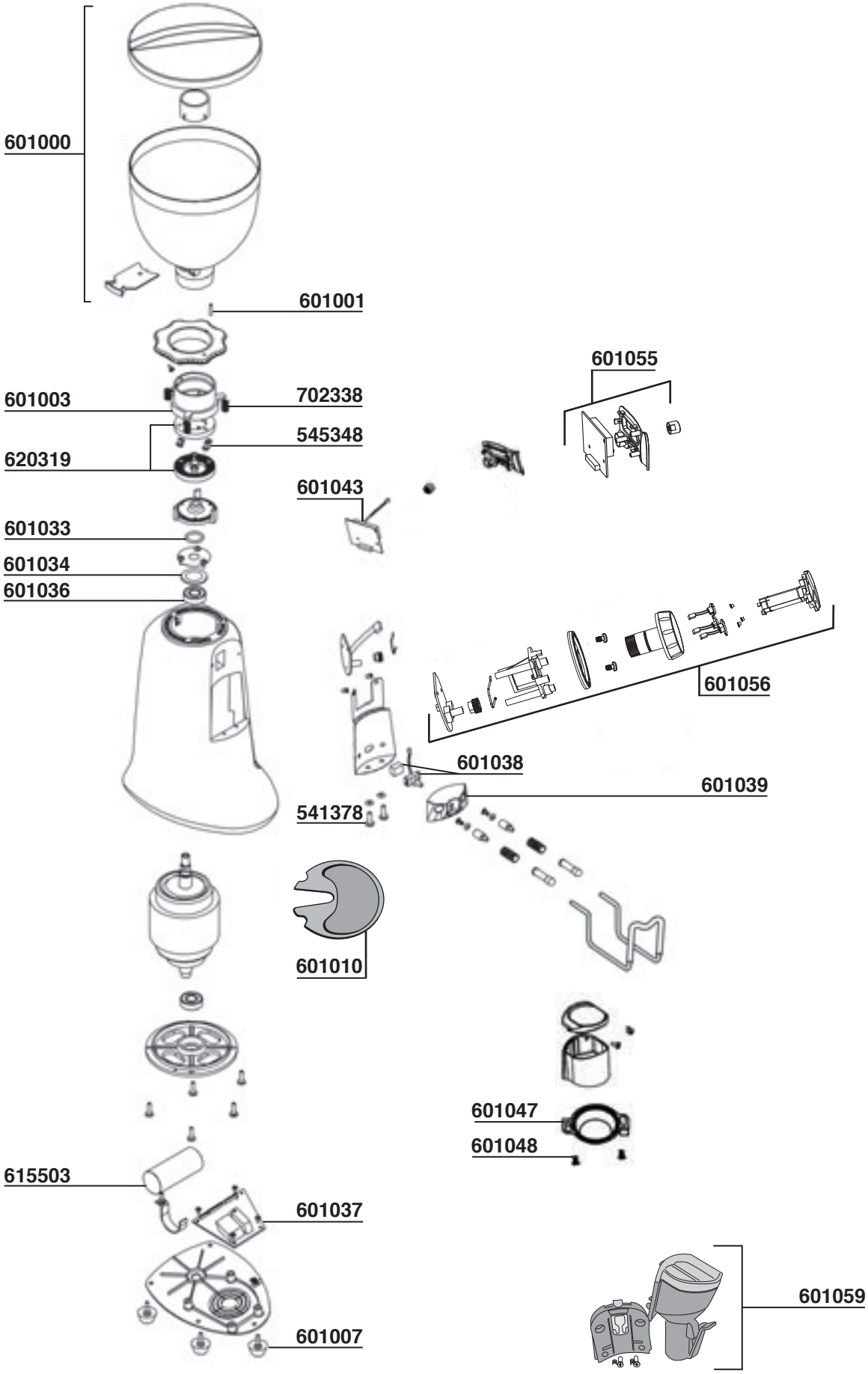

MACINACAFFE'

Tav. 29

LA SAN MARCO : SM 91/96/MK/FK

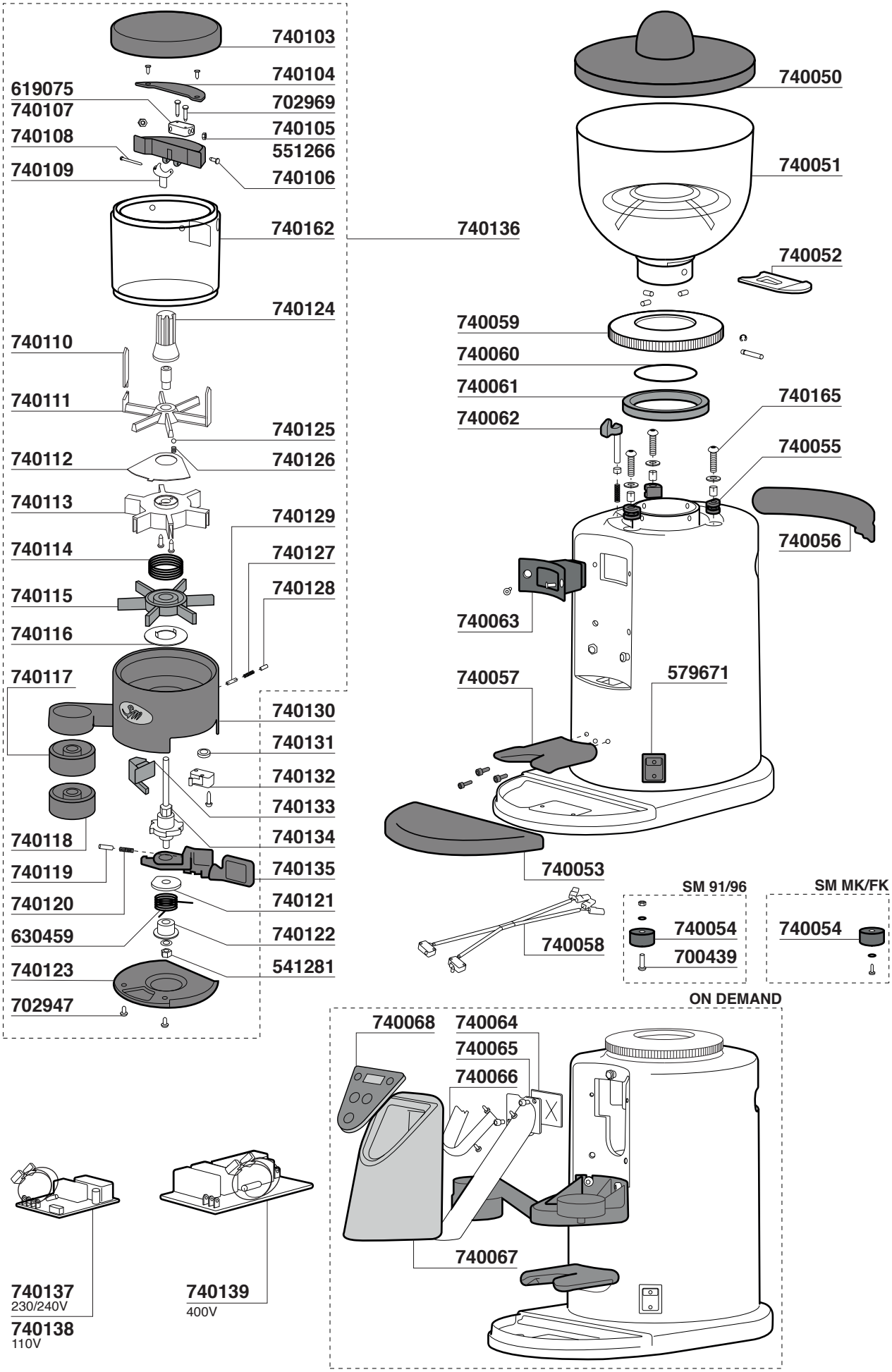

MACINACAFFE'

Tav. 30

LA SAN MARCO : SM 92/97/LK/TK

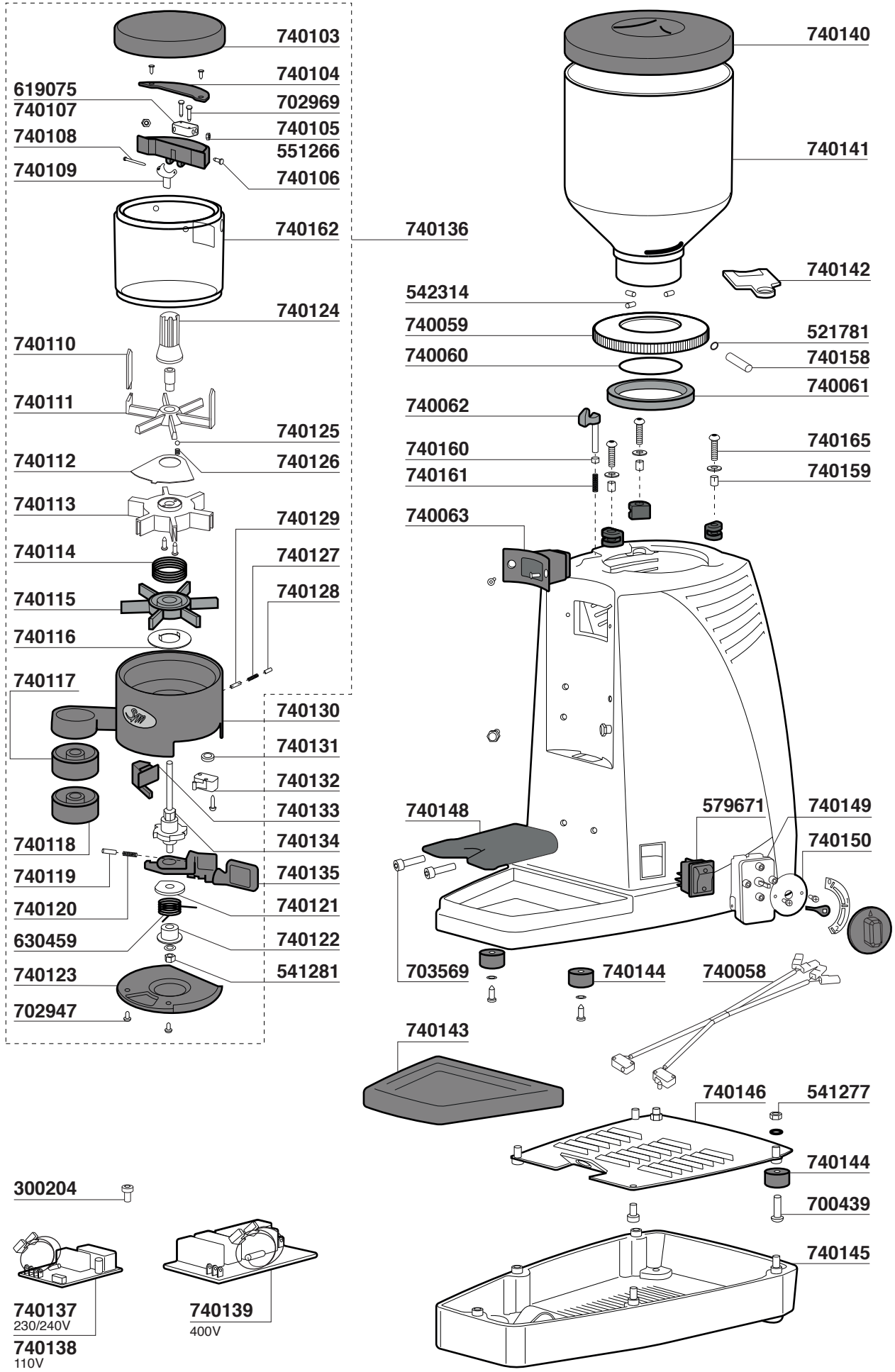

LA SAN MARCO : SM 92/97/LK/TK ON DEMAND

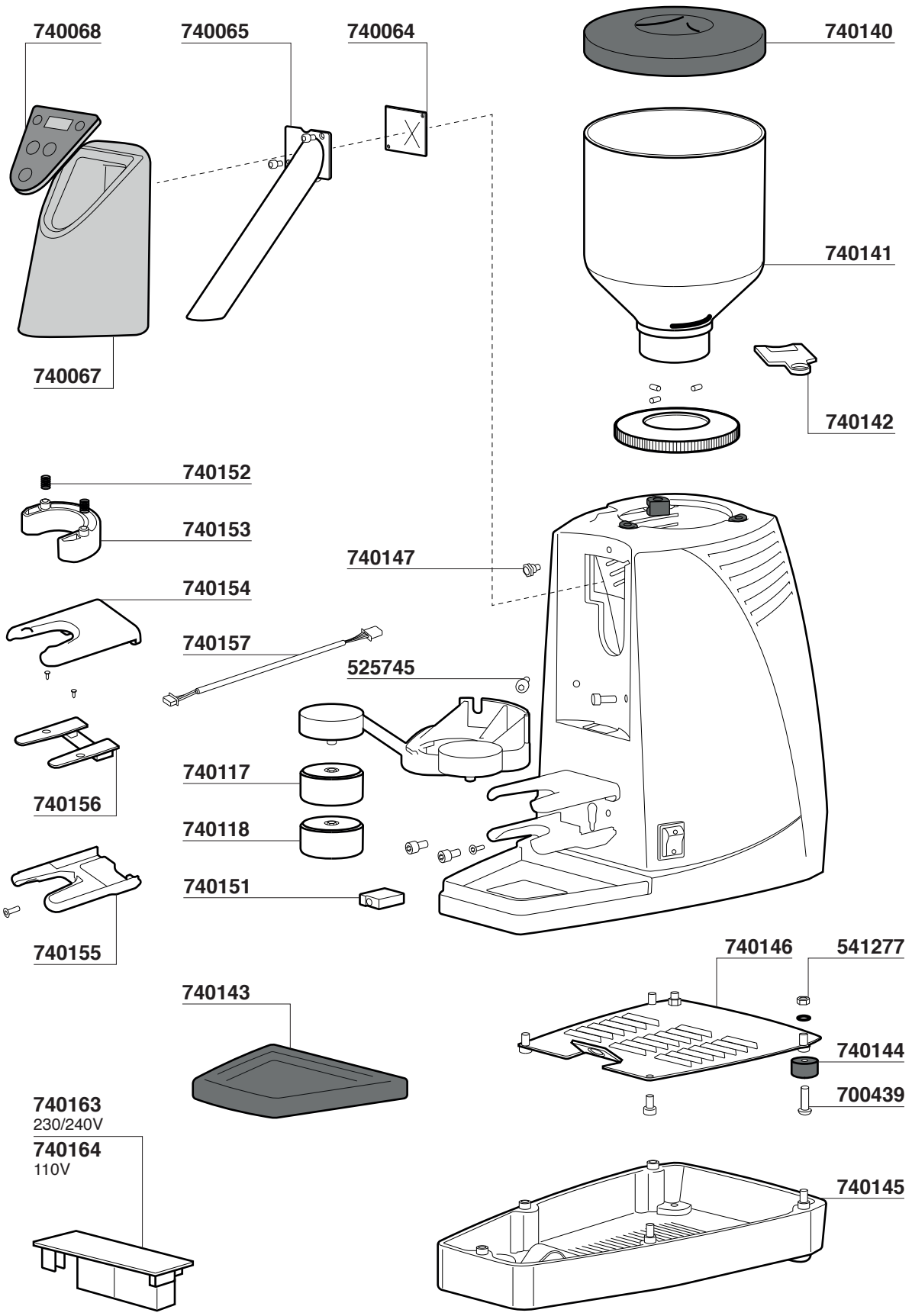

MACINACAFFE'

LA SAN MARCO : SM 91/92/96/97/MK/FK/LK/TK

MACINE / BURRS Ø64 SM-91/92

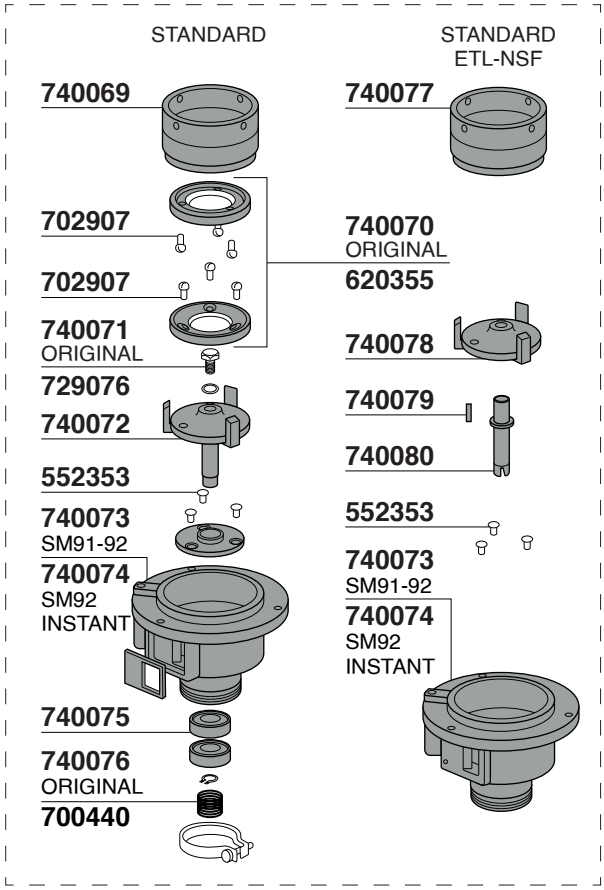

MACINE / BURRS Ø84 SM-96/97

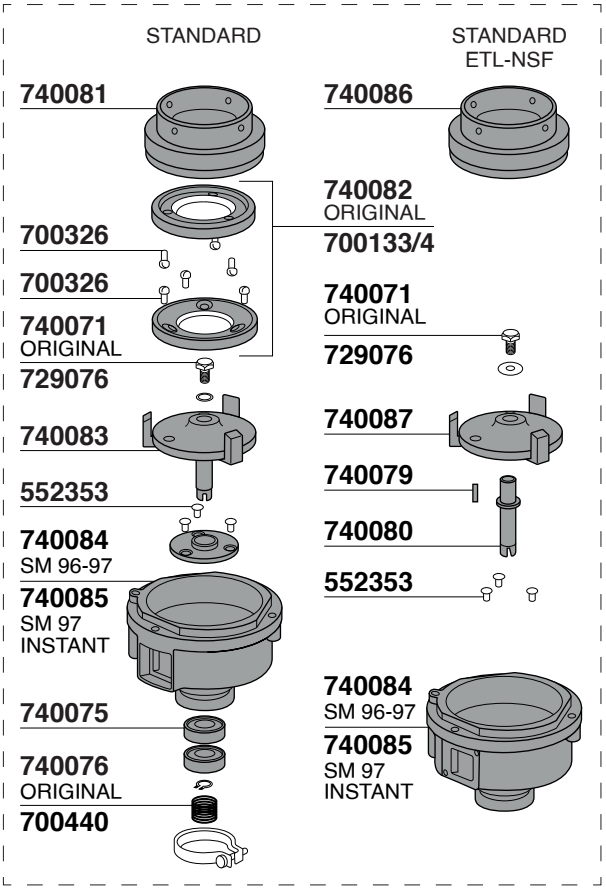

MACINE MISTE / MIXED BURRS SM-MK/LK

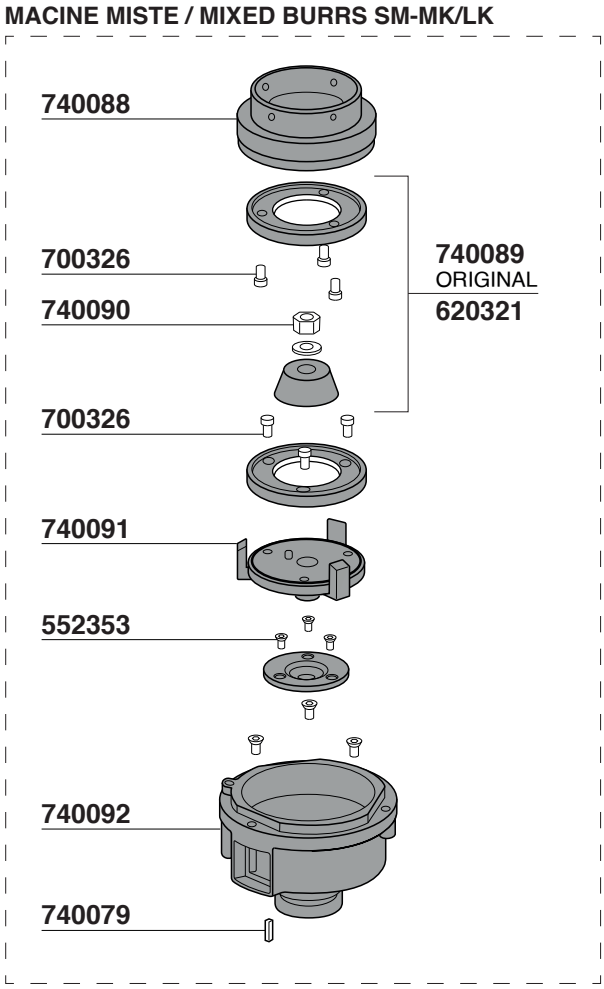

MACINE CONICHE / CONICALS BURRS SM-FK/TK

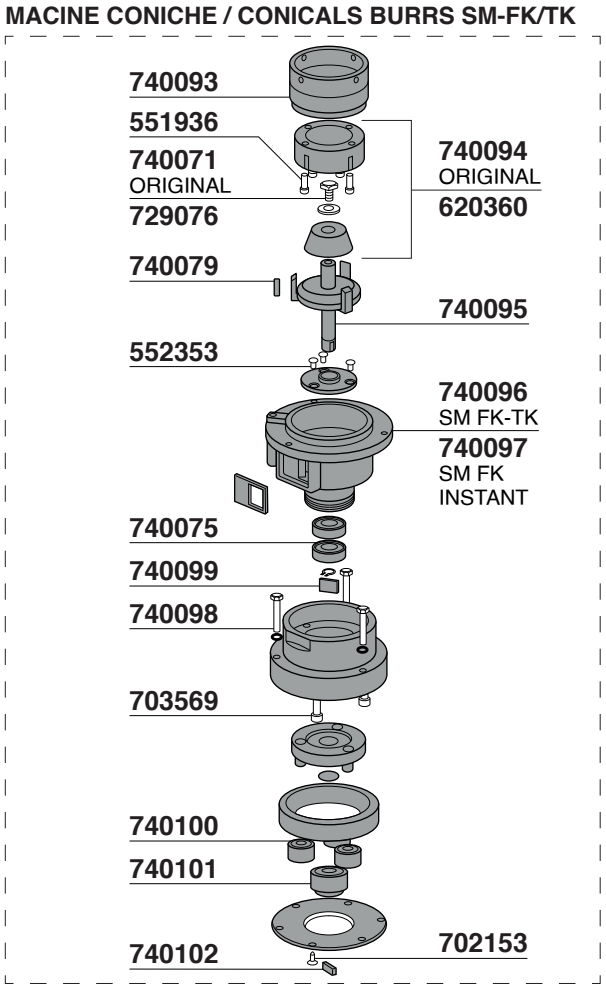

MACINACAFFE'

Tav. 33

MACAP MODEL MX - MXT - MXA - MXK

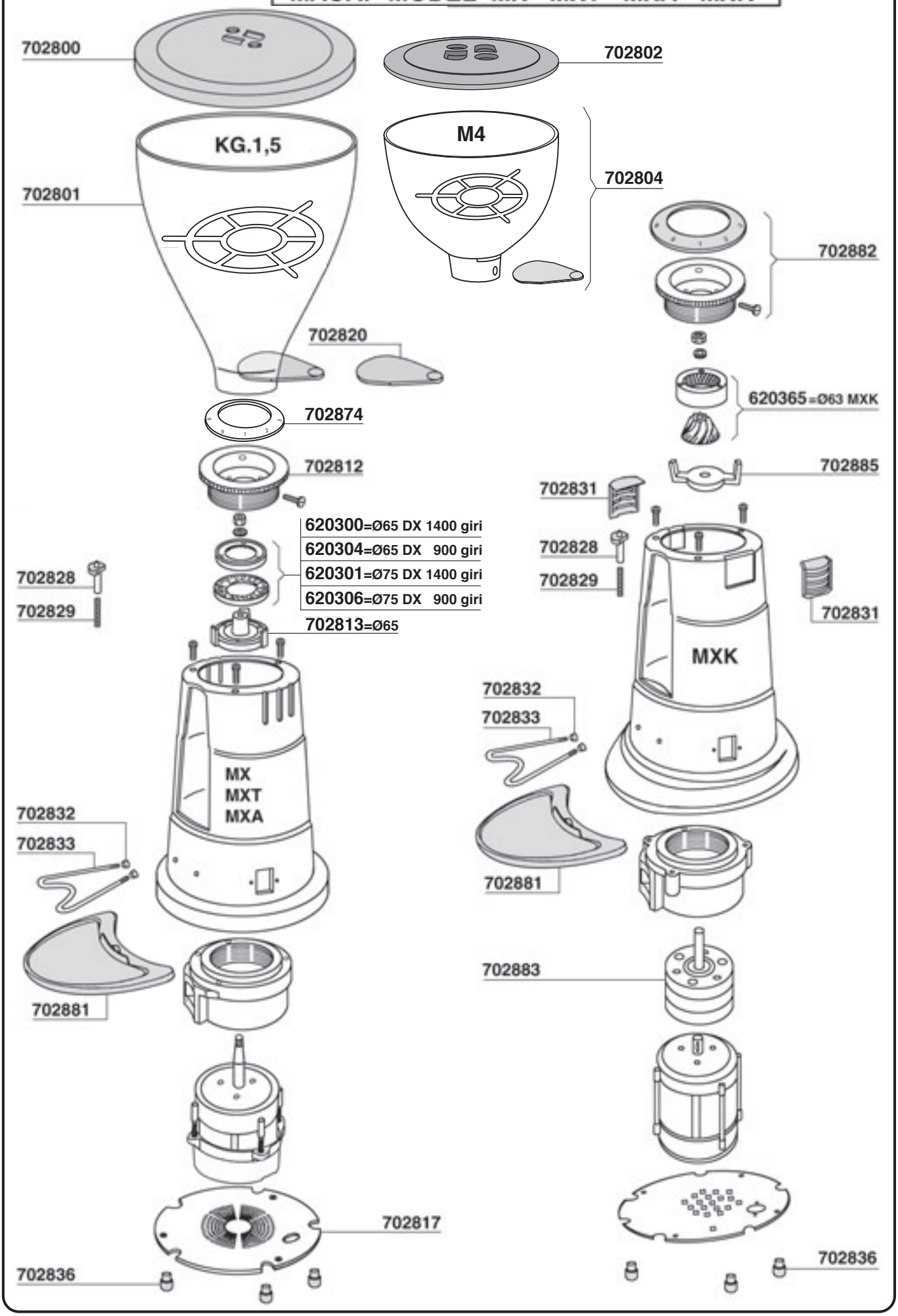

MACINACAFFE'

MACAP MODEL MX - MXT - MXA - MXK

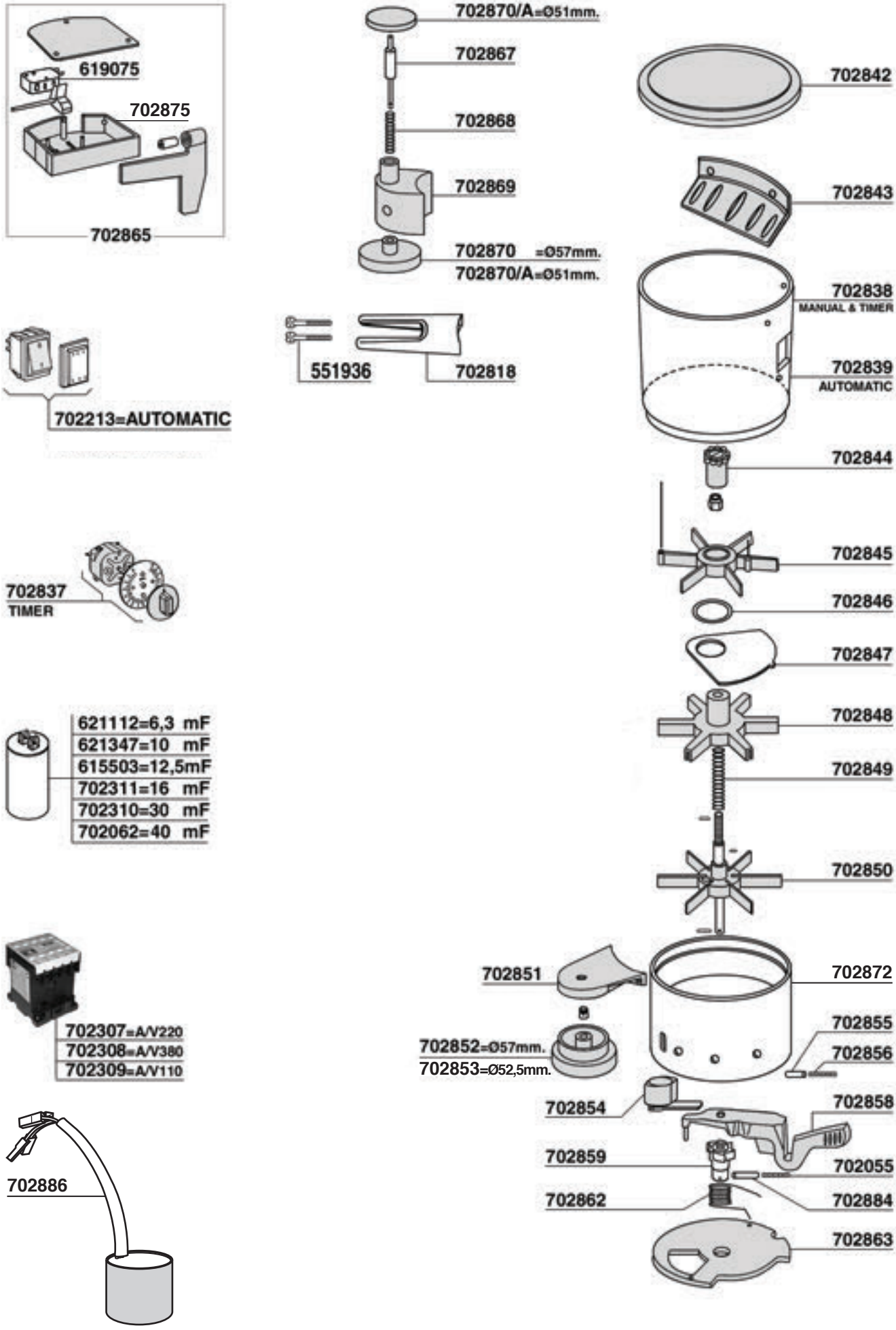

MACINACAFFE'

Tav. 35

MACAP MODEL M2D

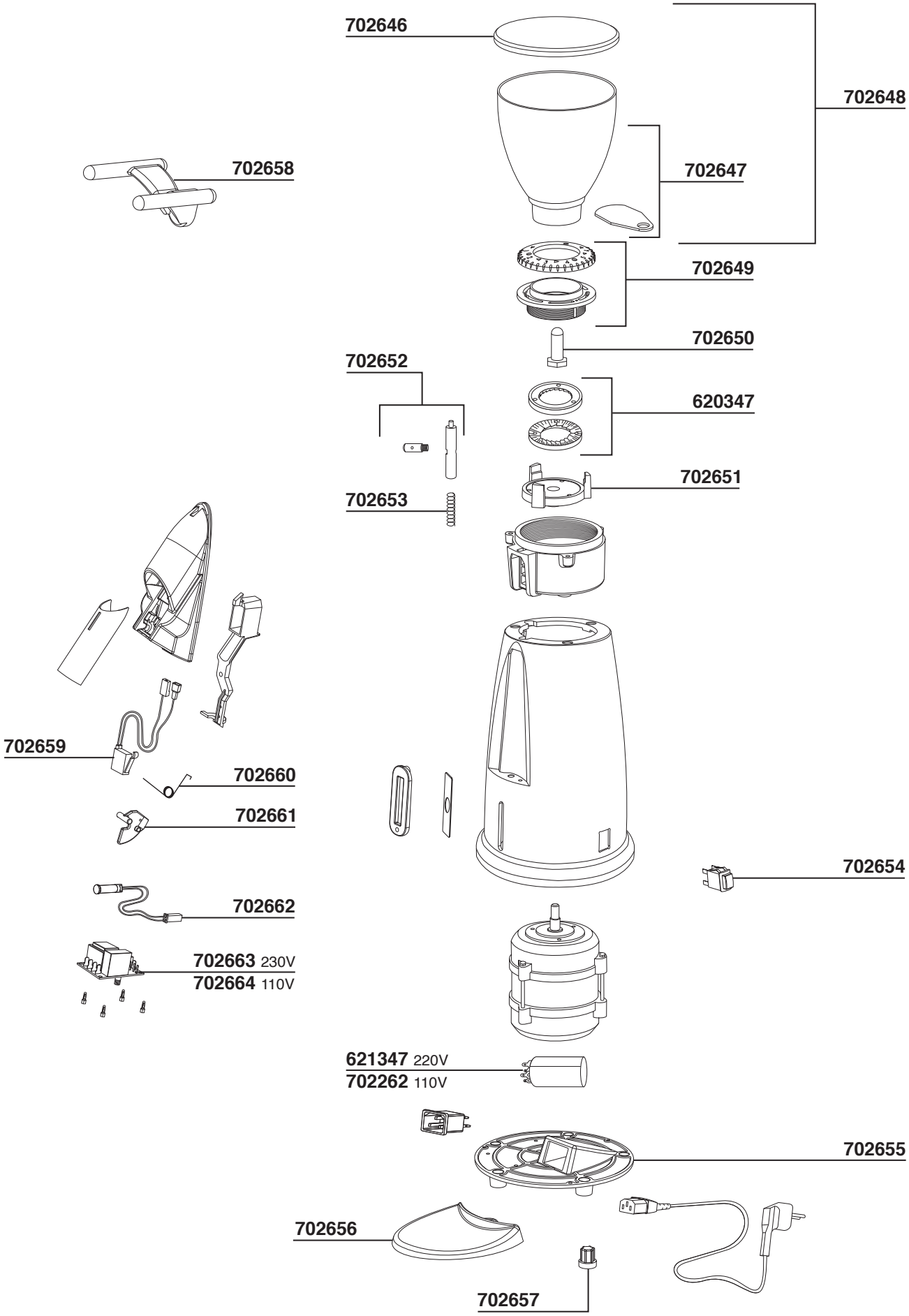

MACINACAFFE'

Tav. 36

MACAP MODEL M5D-M5D PLUS

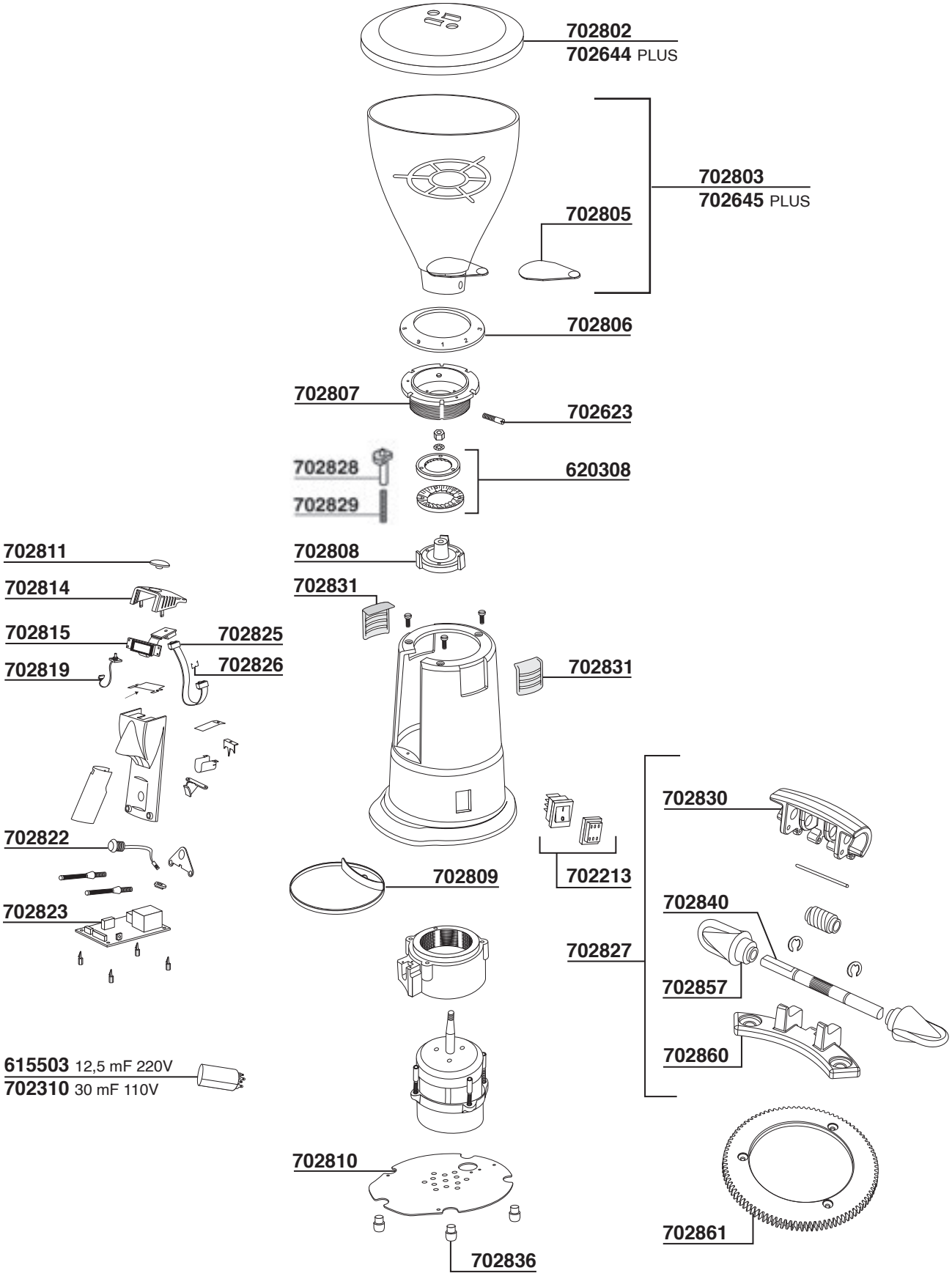

MACINACAFFE’ Tav. 37

MACAP MODEL M7D

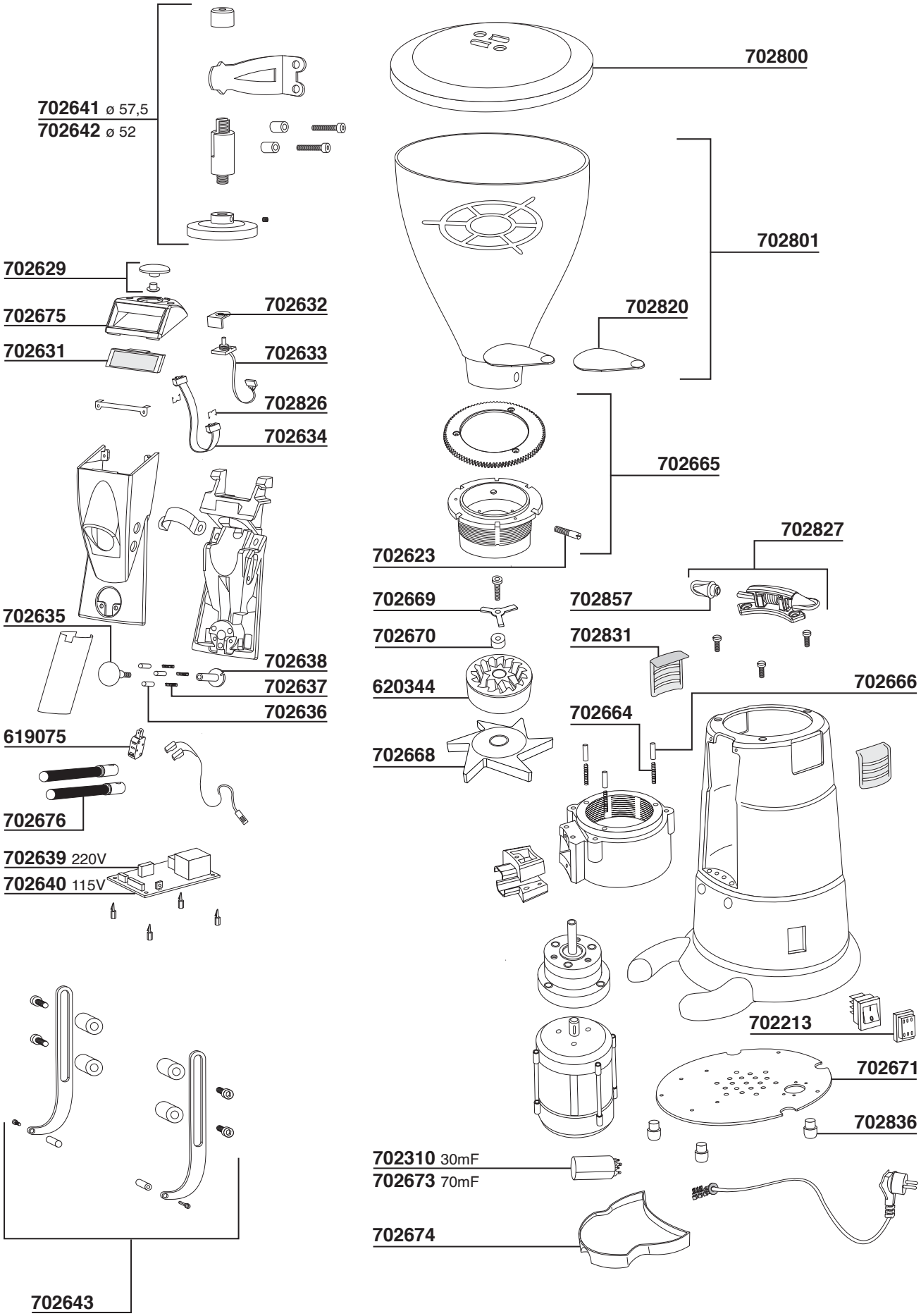

MACINACAFFE'

Tav. 38

MACAP MODEL MXD Xtreme

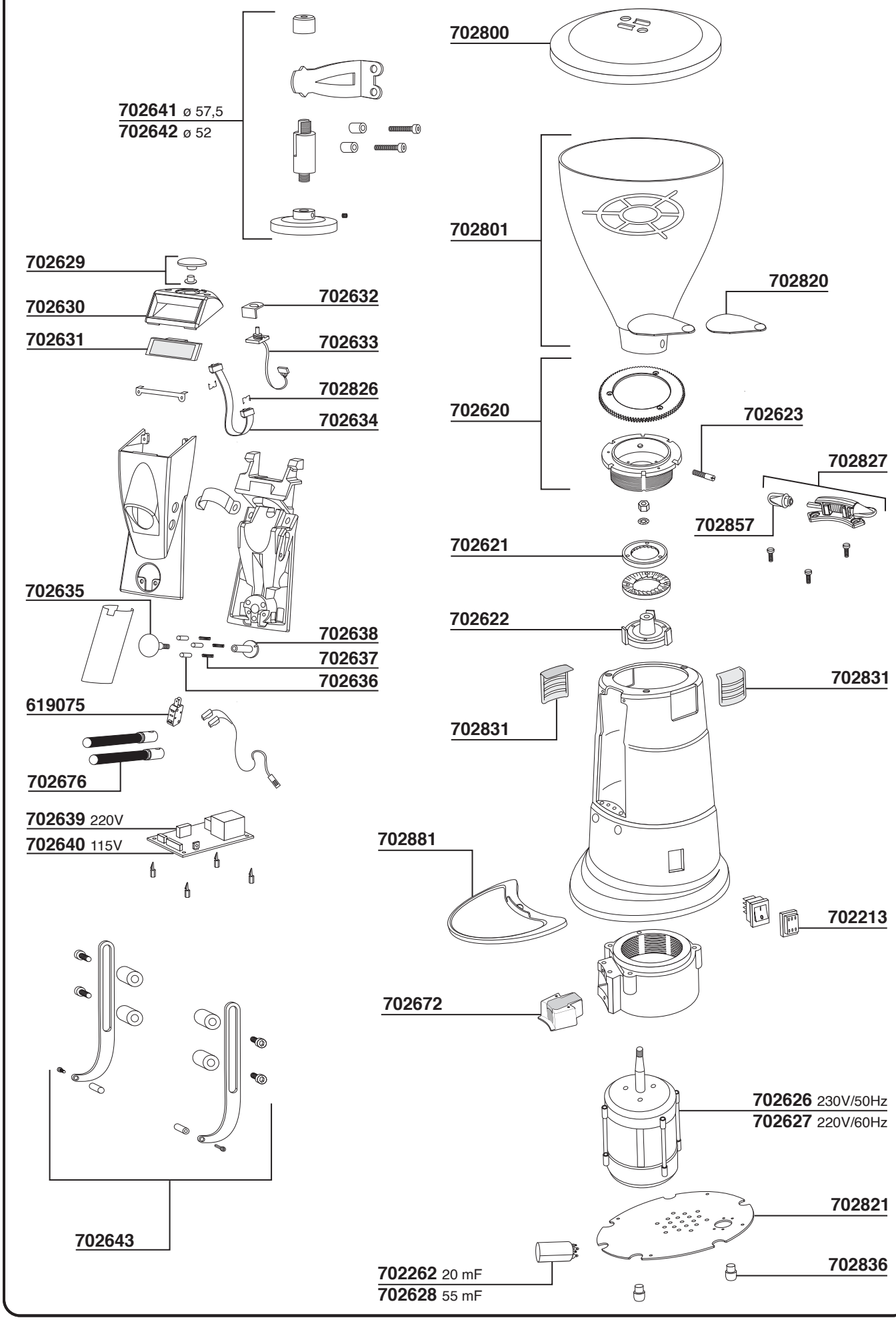

MACINACAFFE'

Tav. 39

MACAP MODEL CPS

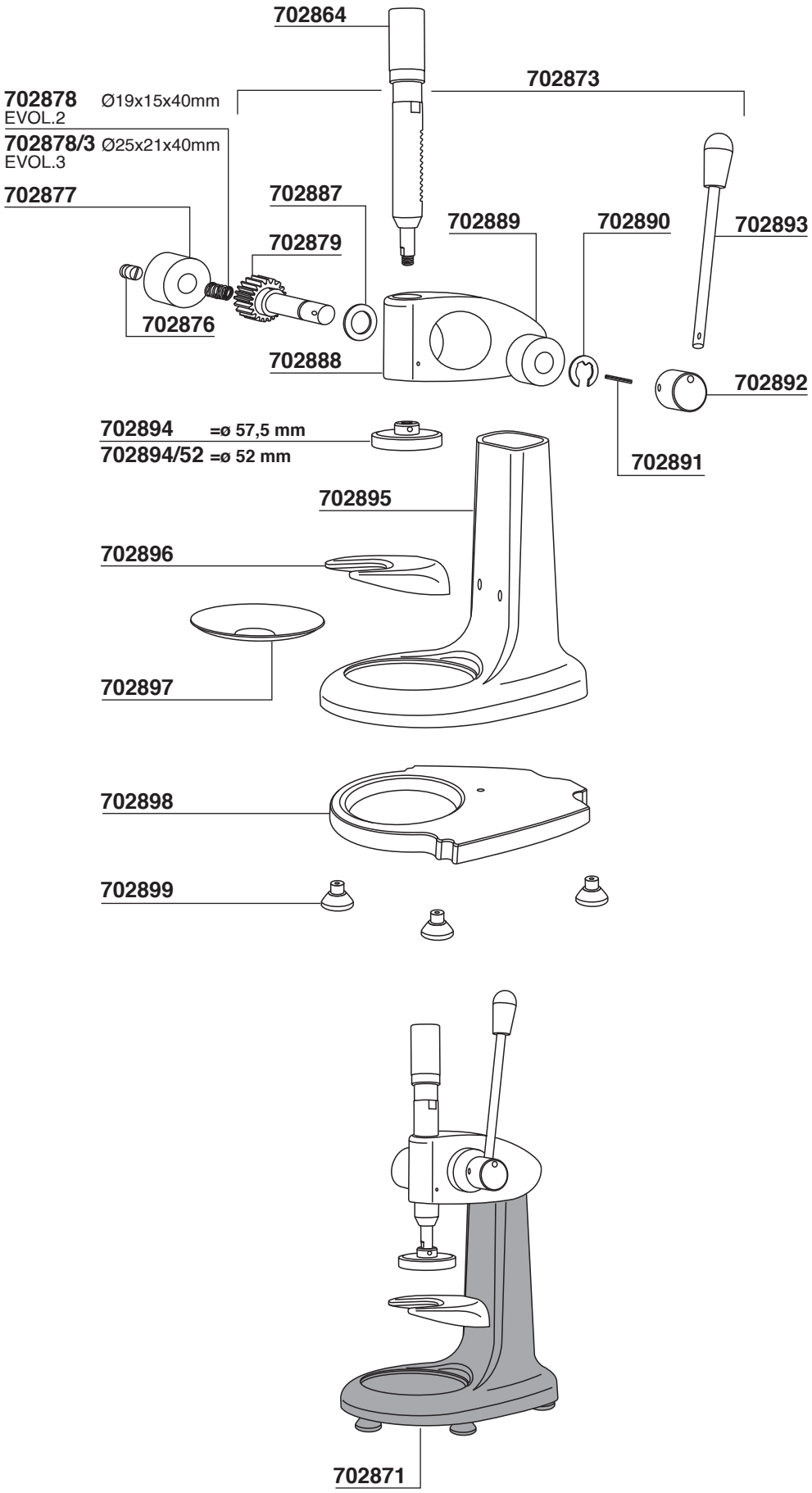

MACINACAFFE'

Tav. 40

MAZZER MODEL: JOLLY - MAJOR

JLY =MODEL JOLLY MJR =MODEL MAJOR

S= MANUAL A= AUTOMATIC

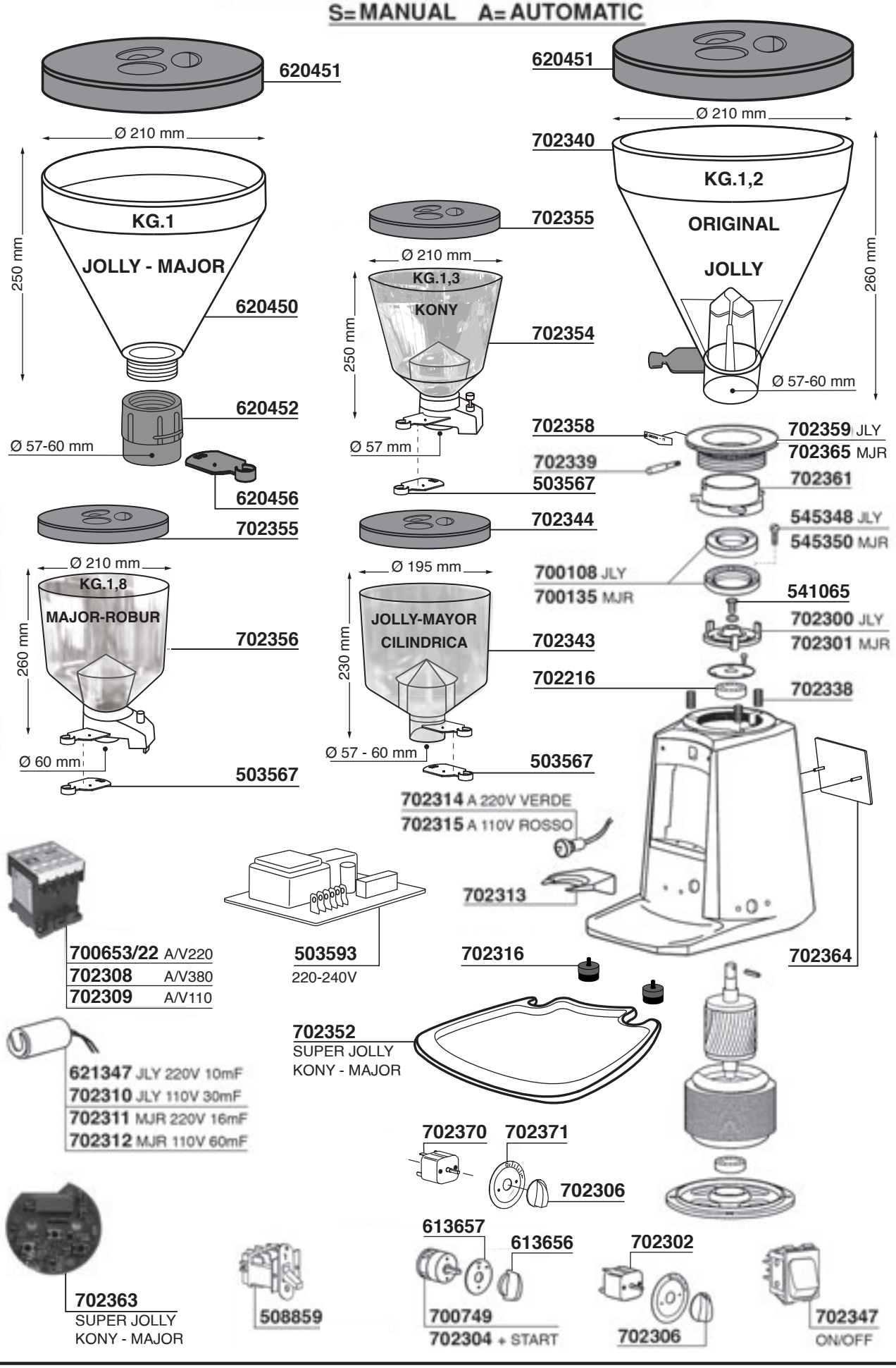

MACINACAFFE'

Tav. 41

MAZZER MODEL: MINI

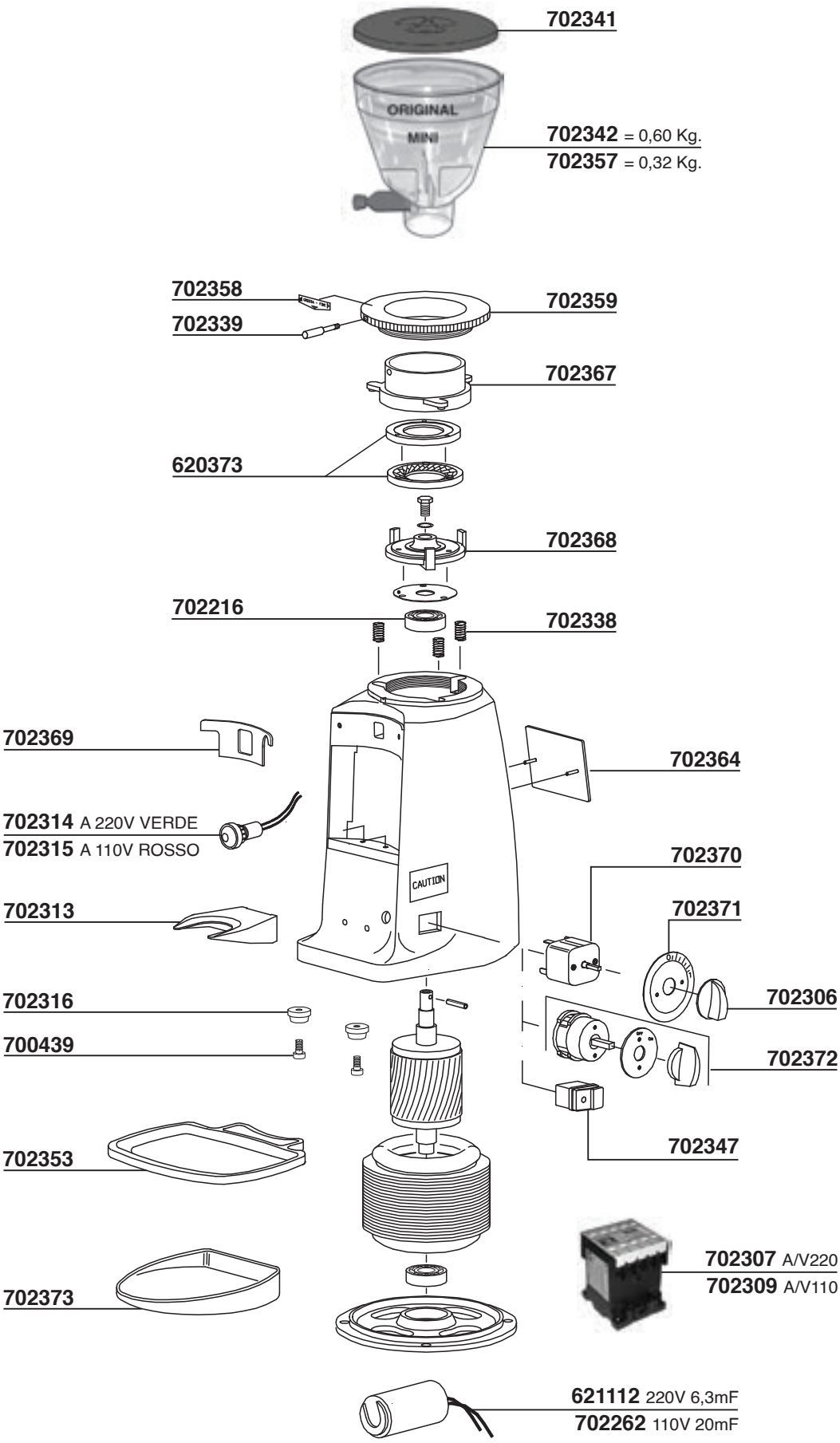

MACINACAFFE'

Tav. 42

MAZZER MODEL: JOLLY-MAJOR-MINI

JLY=MODEL JOLLY
S=MANUAL

MJR=MODEL MAJOR
A=AUTOMATIC

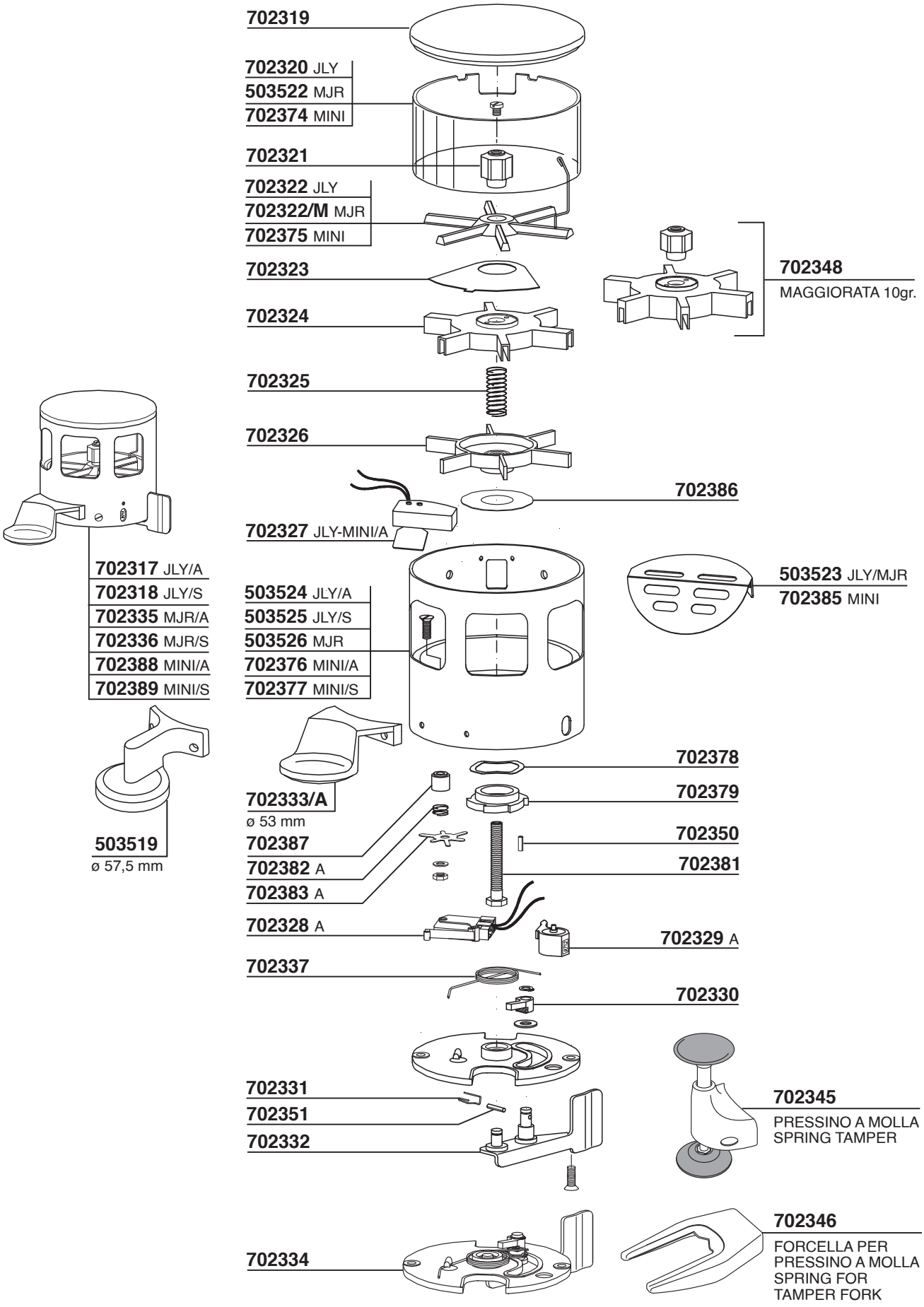

MACINACAFFE' Tav. 43

MAZZER MODEL:MINI ELETRONICO A-B

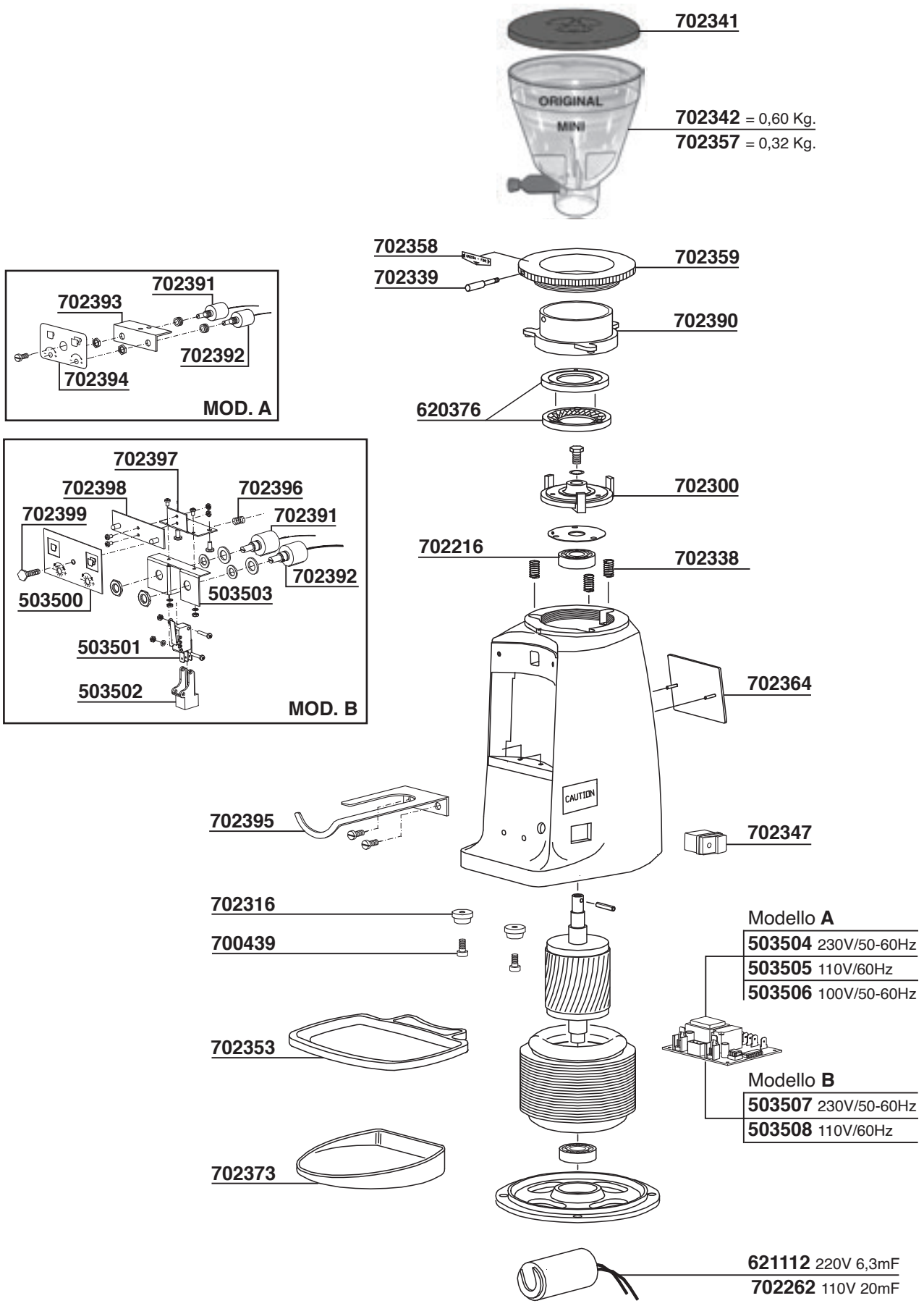

MACINACAFFE’ Tav. 44

MAZZER MODEL:MINI ELETRONICO A-B

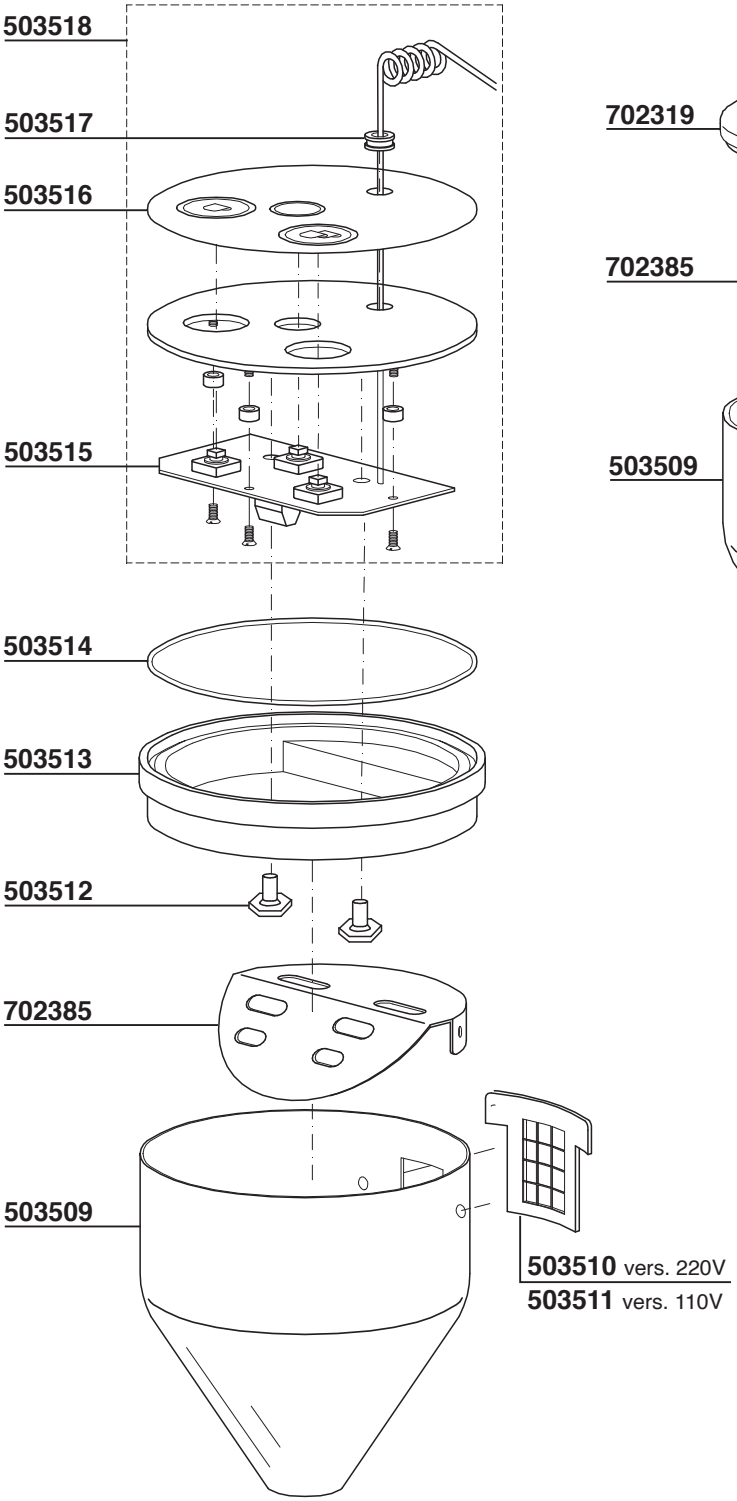

MOD. A

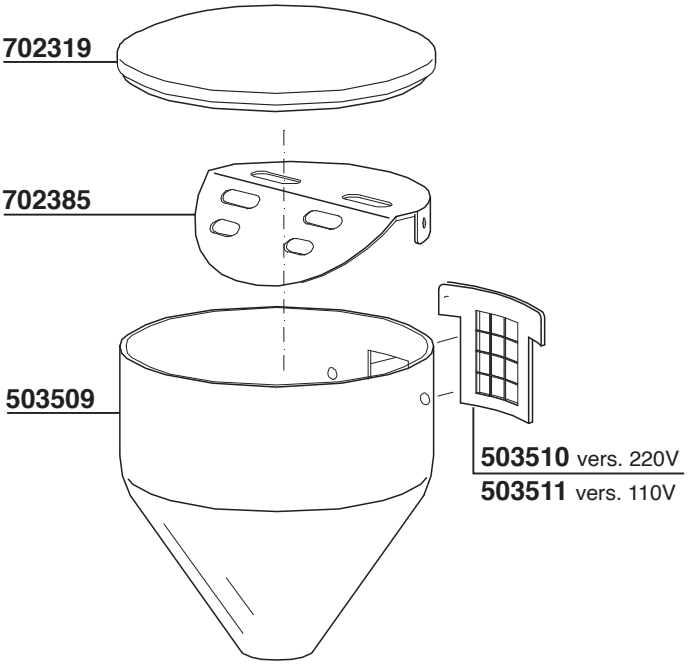

MOD. B

MACINACAFFE'

Tav. 45

MAZZER MODEL: ROBUR DOSATORE

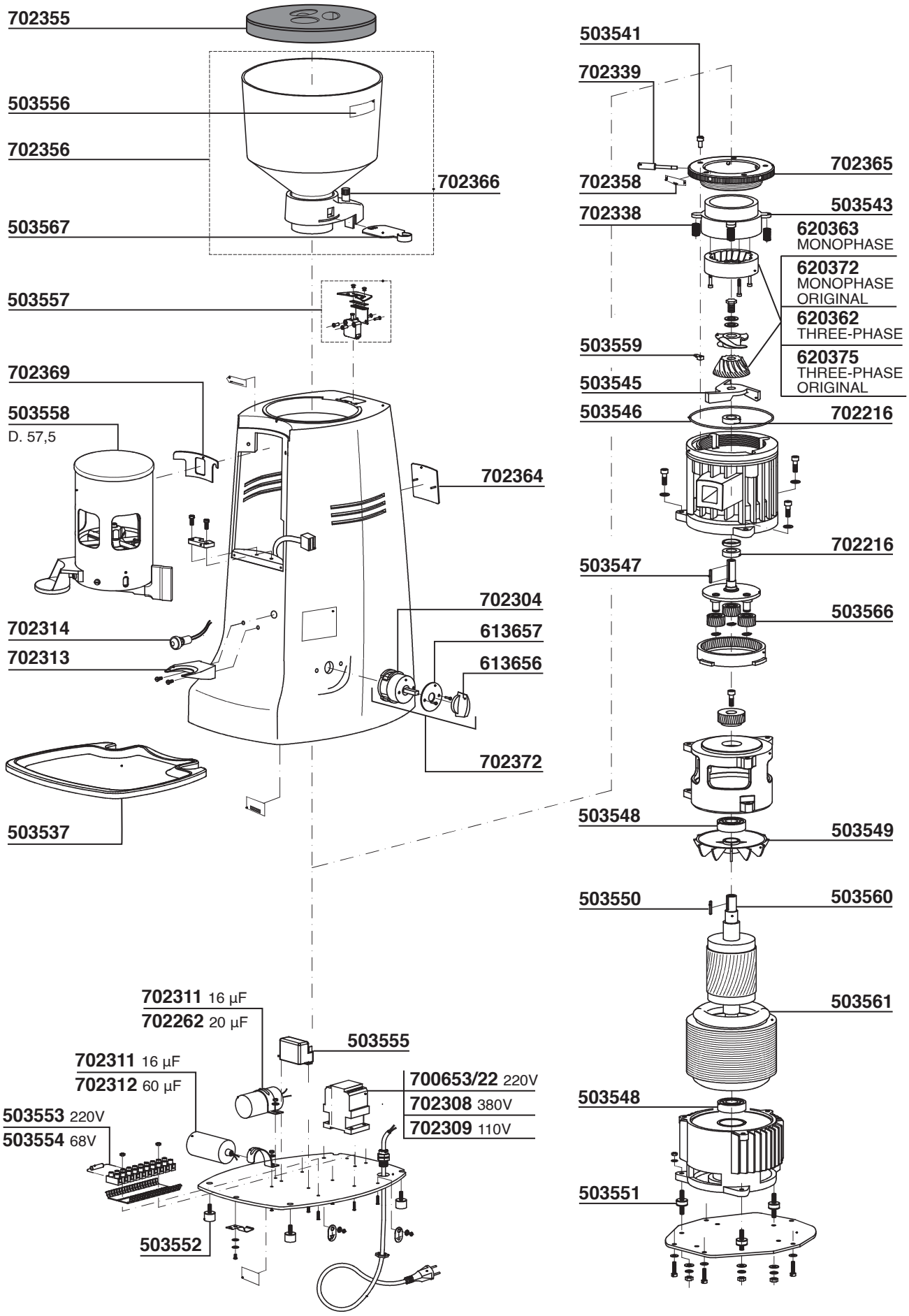

MACINACAFFE'

Tav. 46

MAZZER MODEL: ROBUR DOSATORE

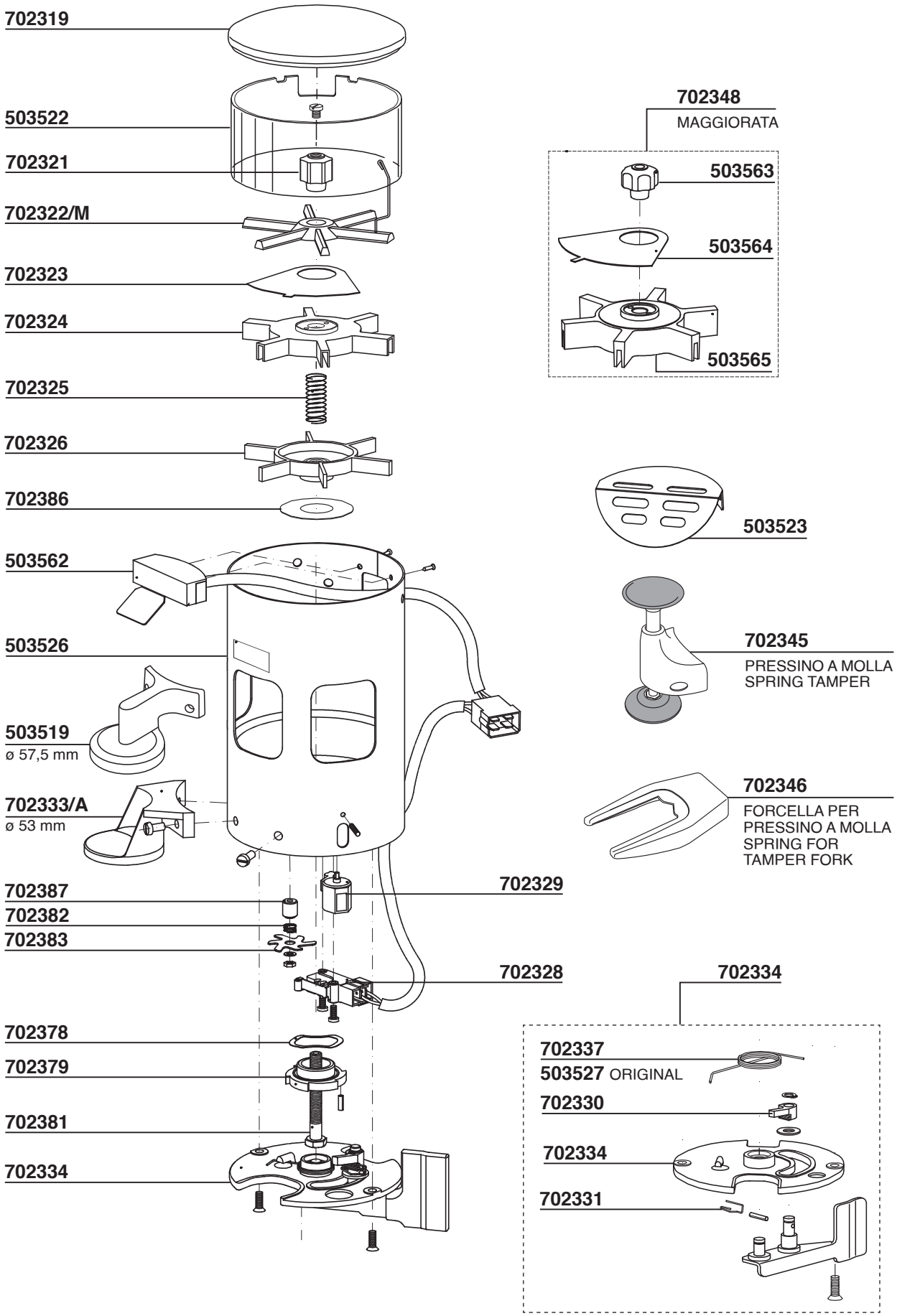

MACINACAFFE’ Tav. 47

MAZZER MODEL: ROBUR ELETTRONICO

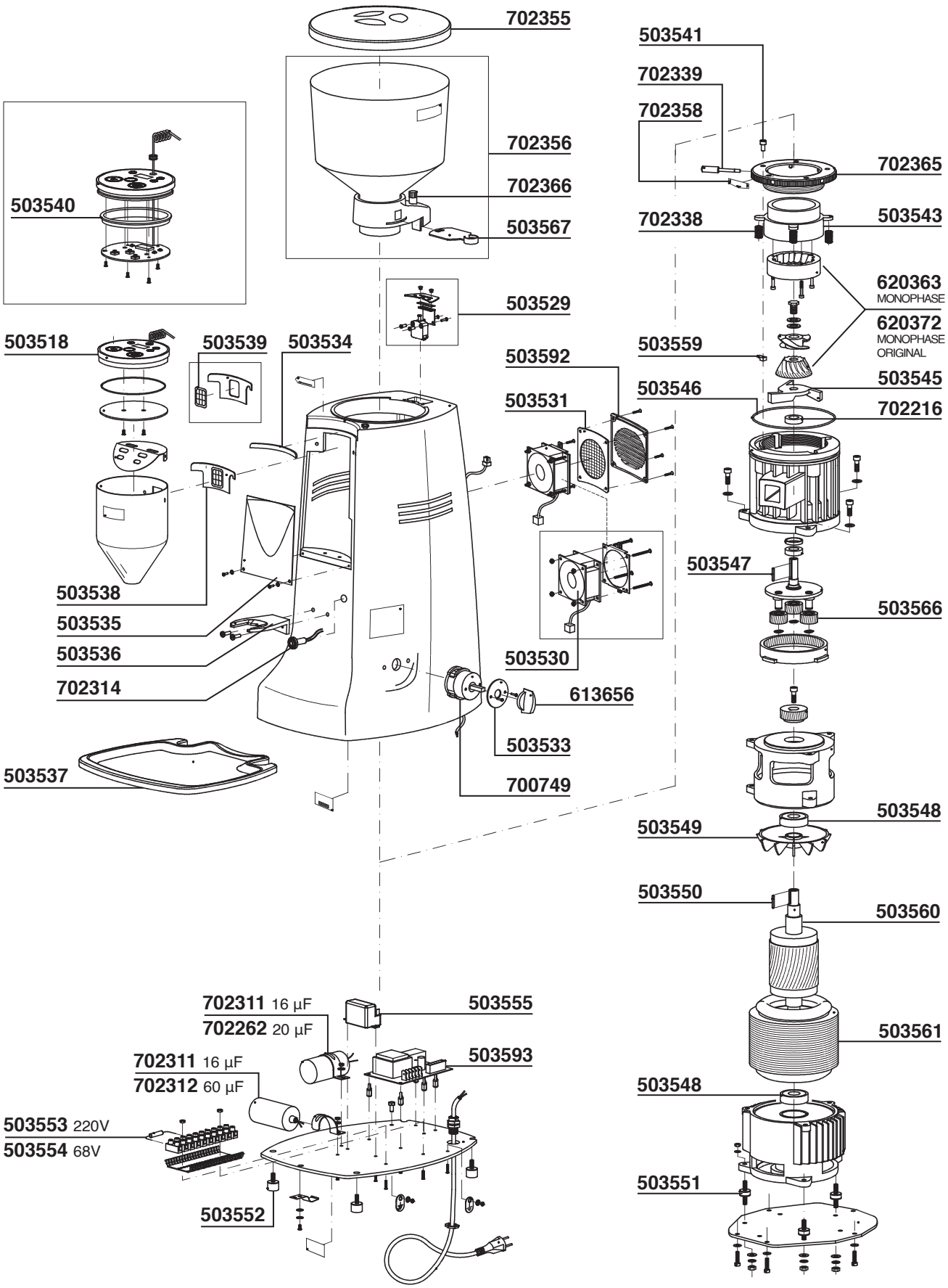

MACINACAFFE'

Tav. 48

NUOVA SIMONELLI MODEL: GRINTA AMM-AMMT

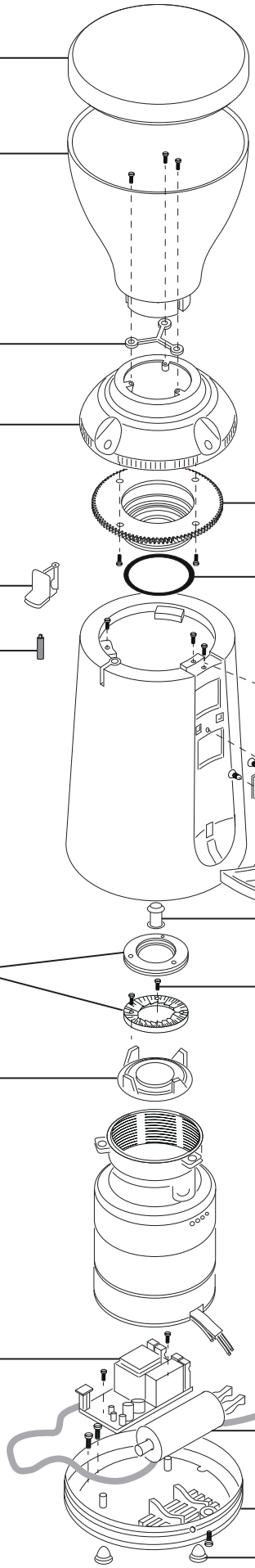

MACINACAFFE' Tav. 49

NUOVA SIMONELLI MODEL: MYTHOS ONE

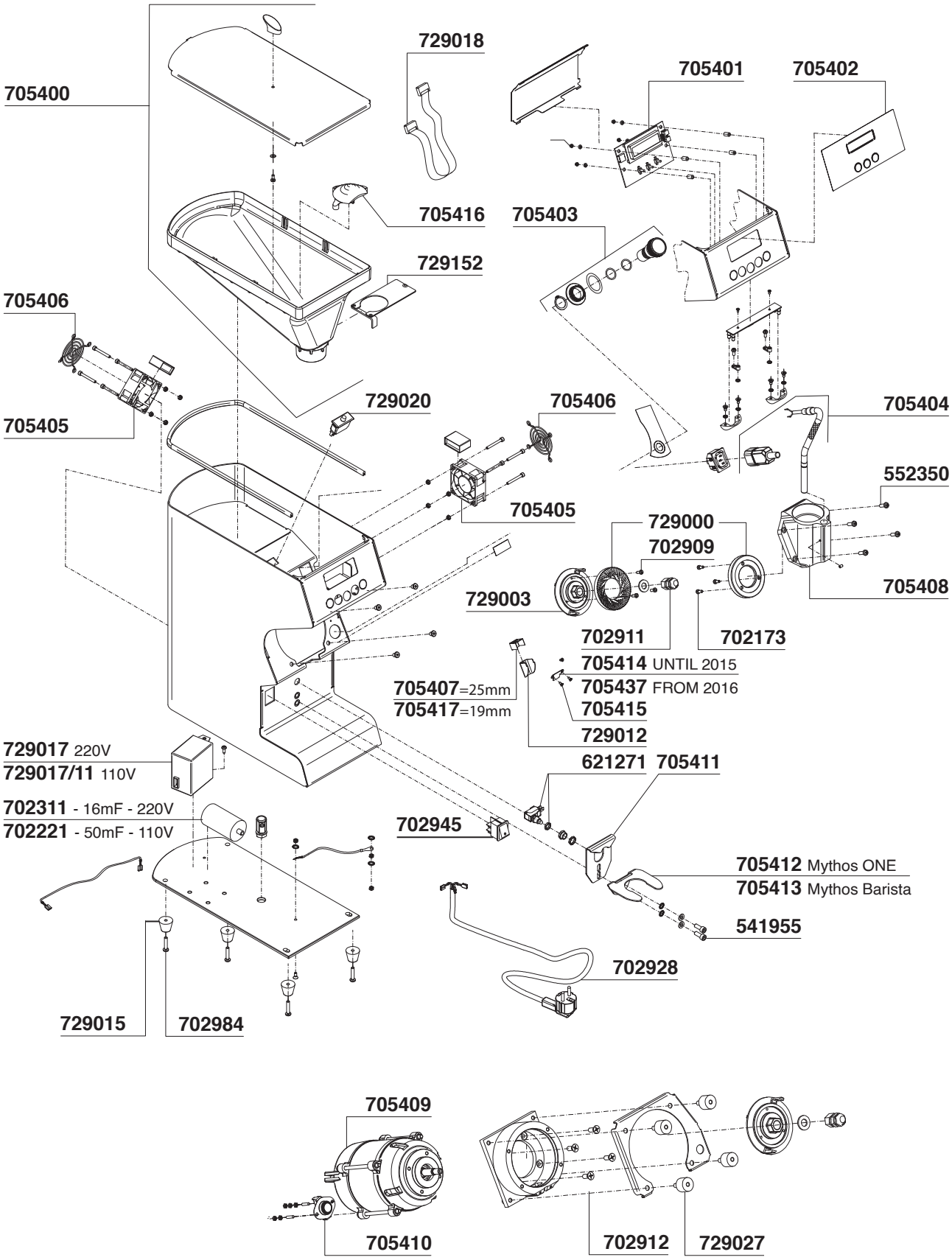

MACINACAFFE'

Tav. 50

OBEL MODEL:DSQ - NR1400 - NR900

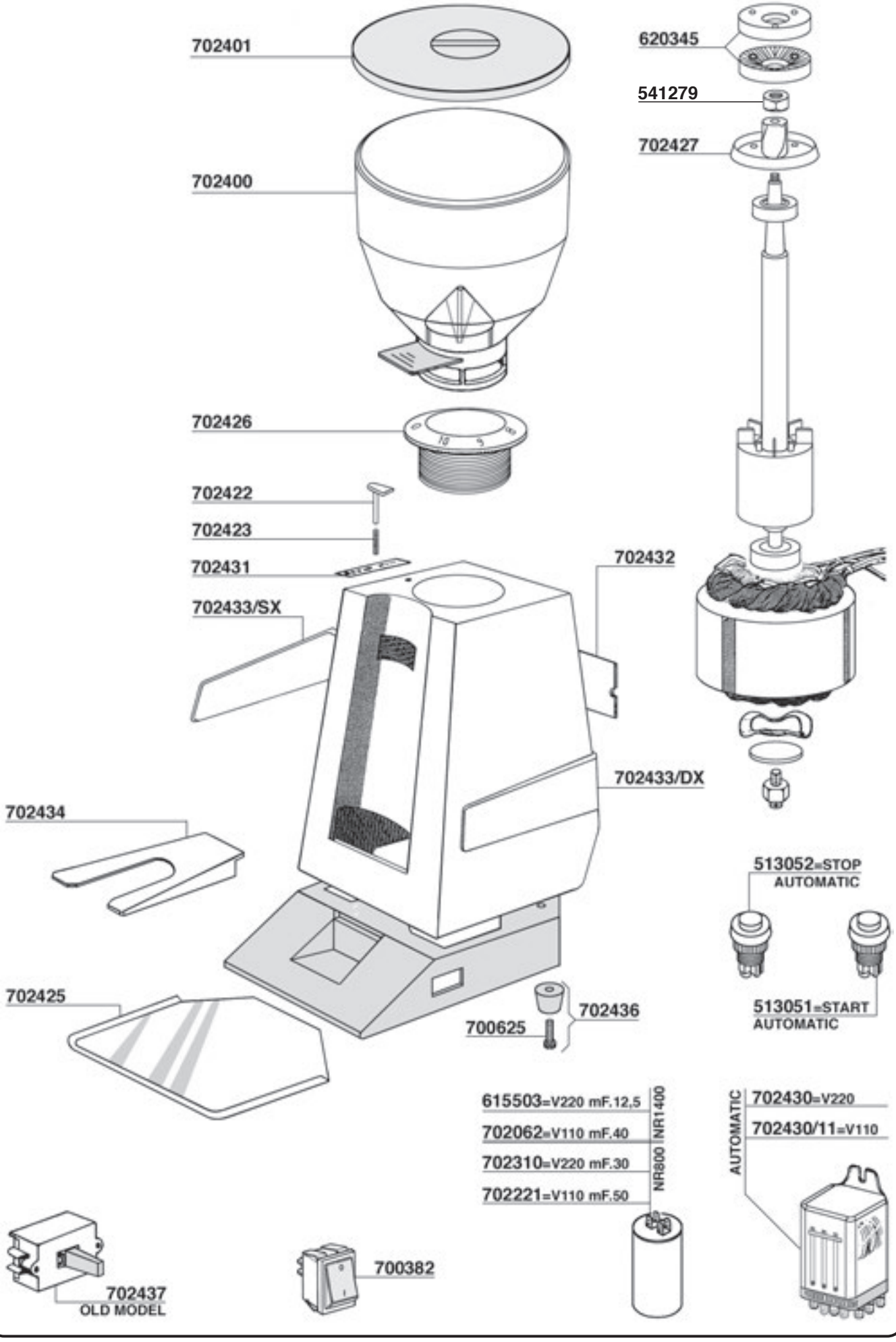

MACINACAFFE'

Tav. 51

OBEL MODEL: EB

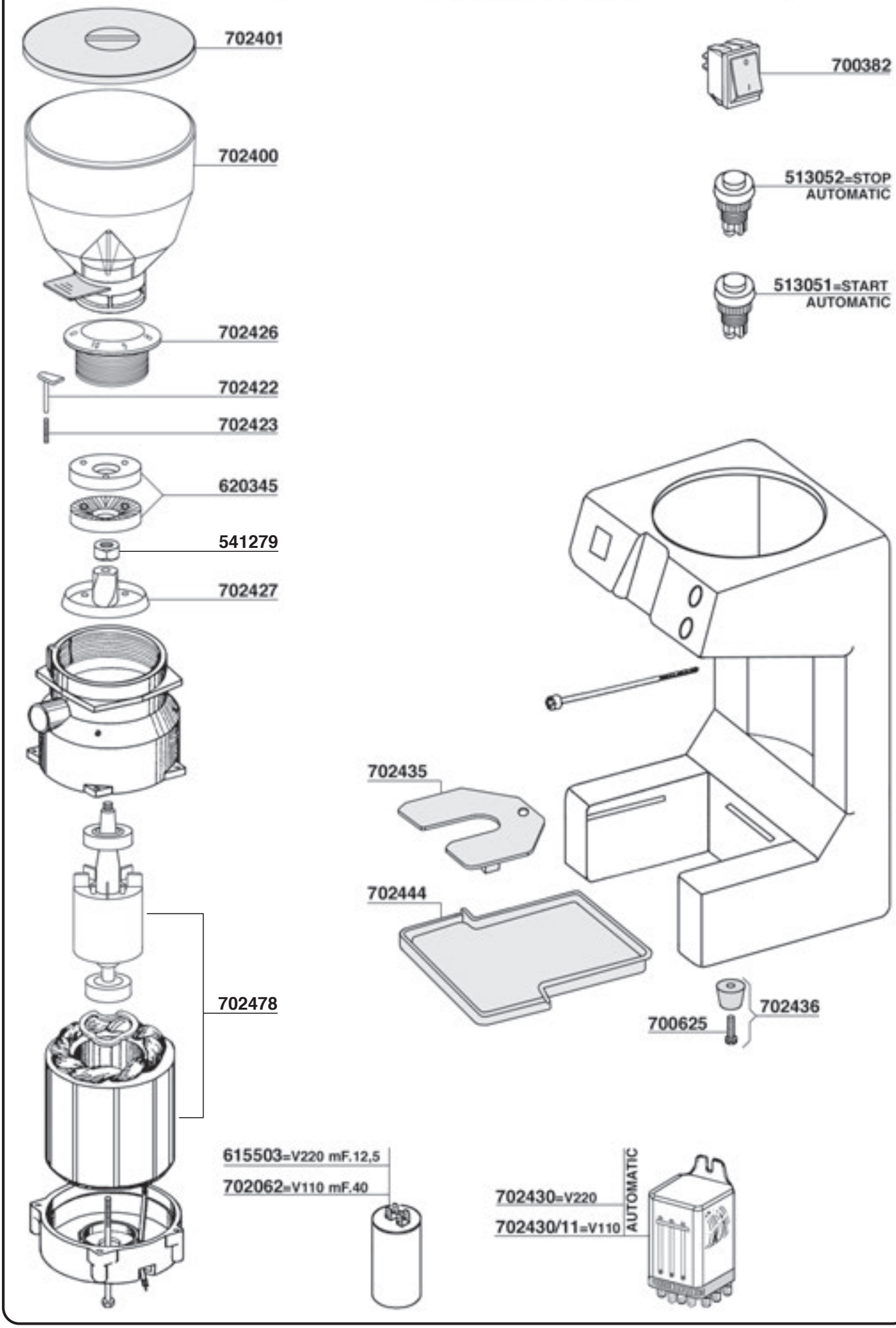

MACINACAFFE'

Tav. 52

OBEL MODEL: DSQ-EB-NR1400-NR900-MITO

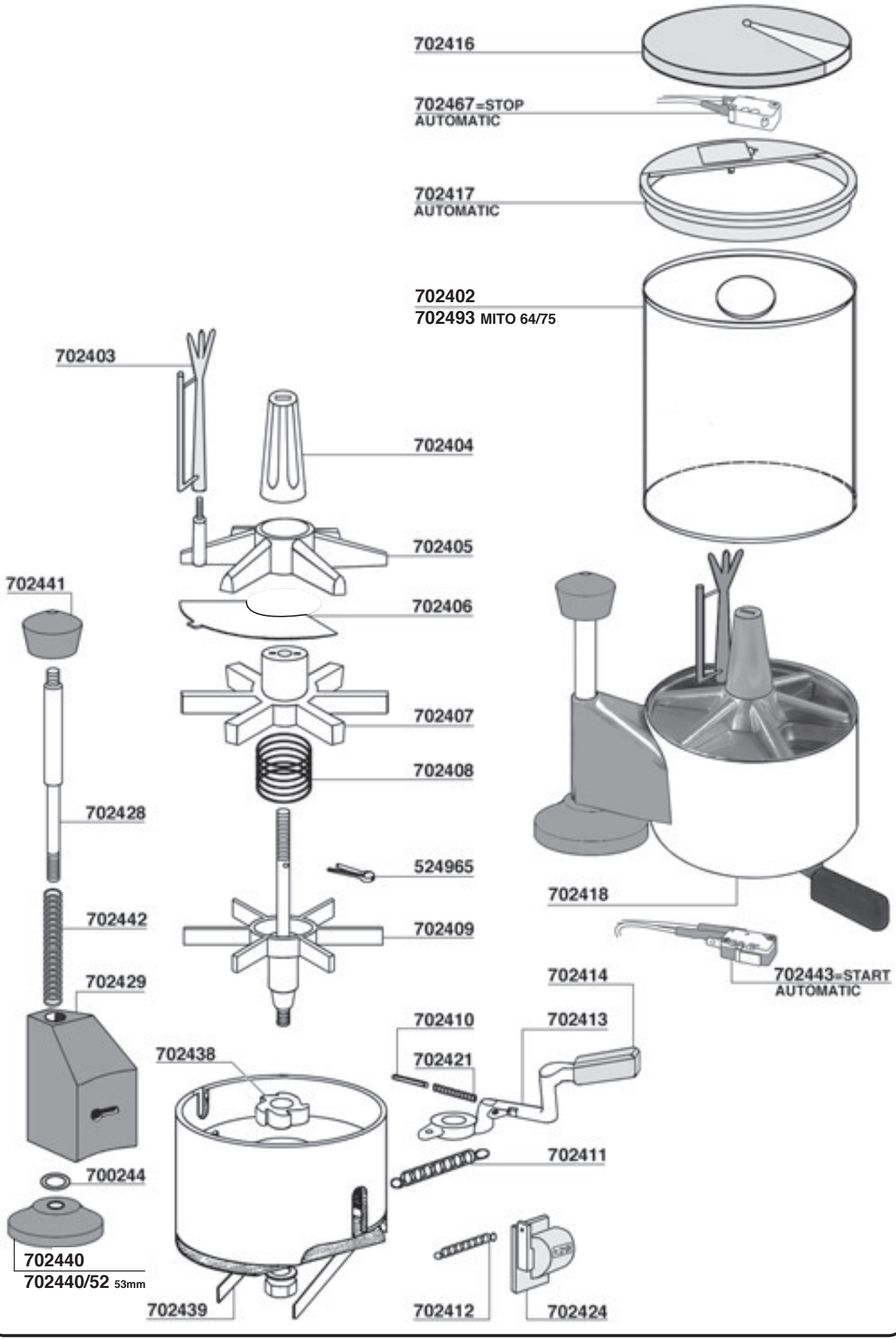

MACINACAFFE'

Tav. 53

OBEL MODEL:JUNIOR - ROMA

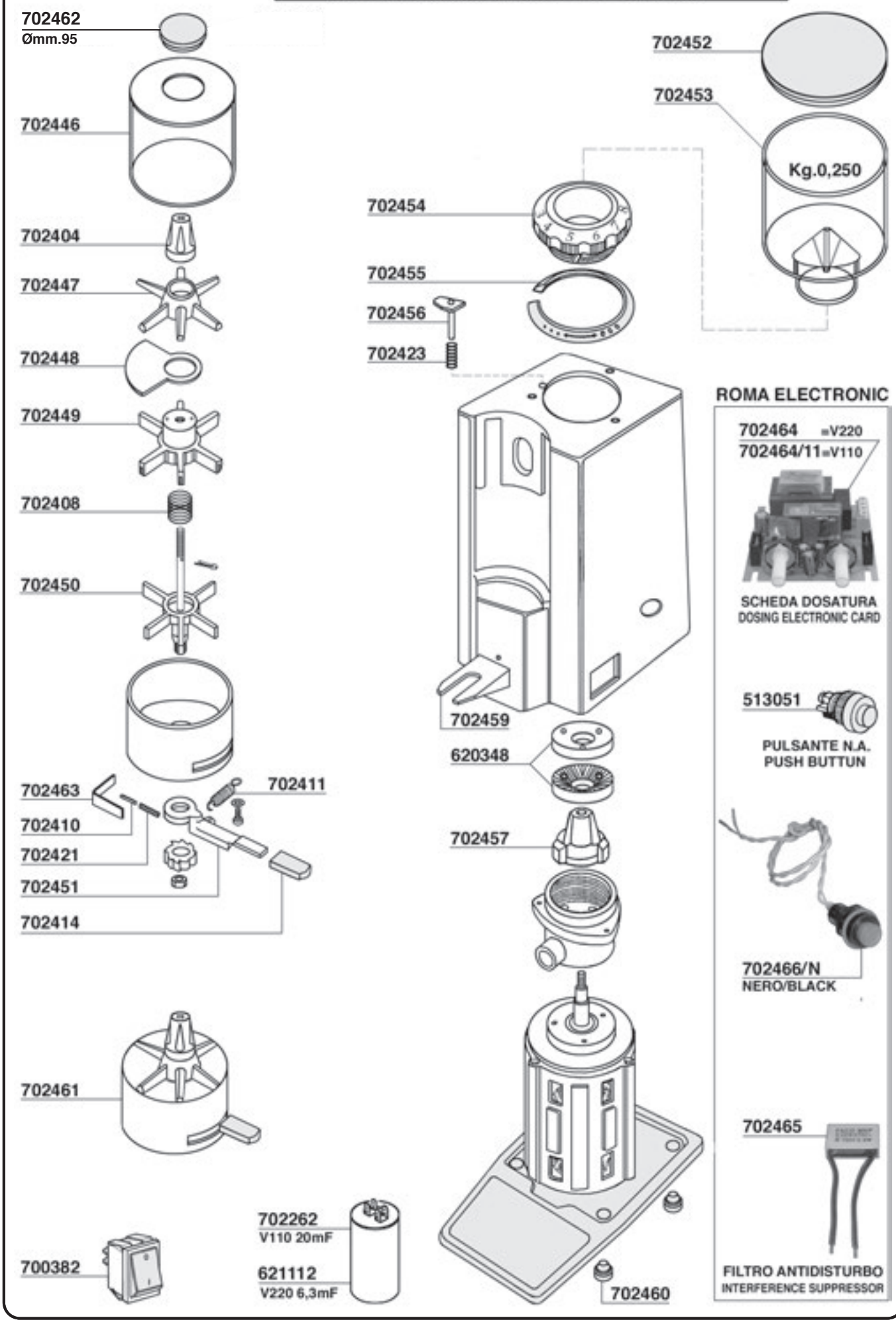

MACINACAFFE’ Tav. 54

OBEL MODEL: MITO ATR – MITO ON DEMAND

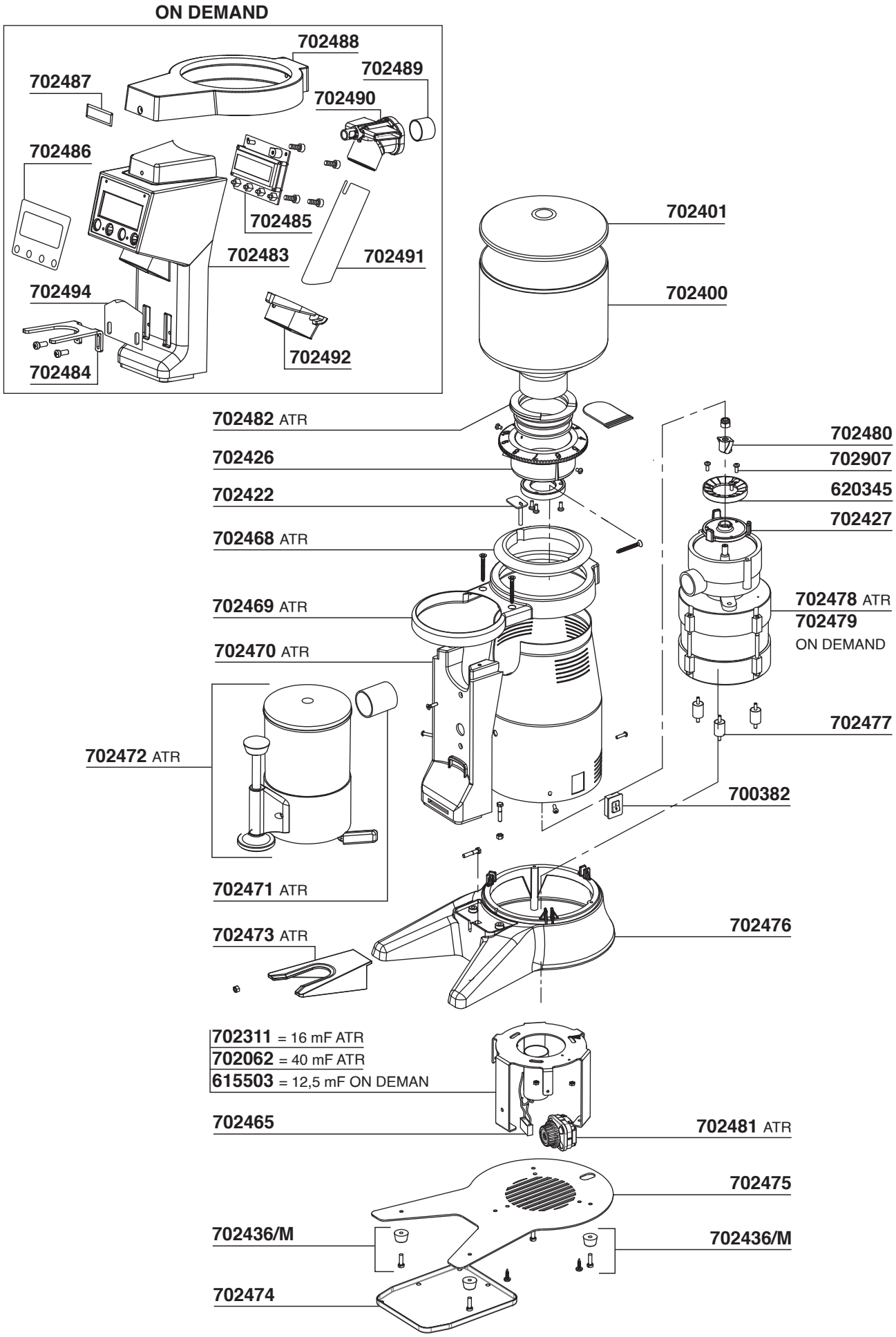

MACINACAFFE'

Tav. 55

QUAMAR MODEL: T.80A - T.80E

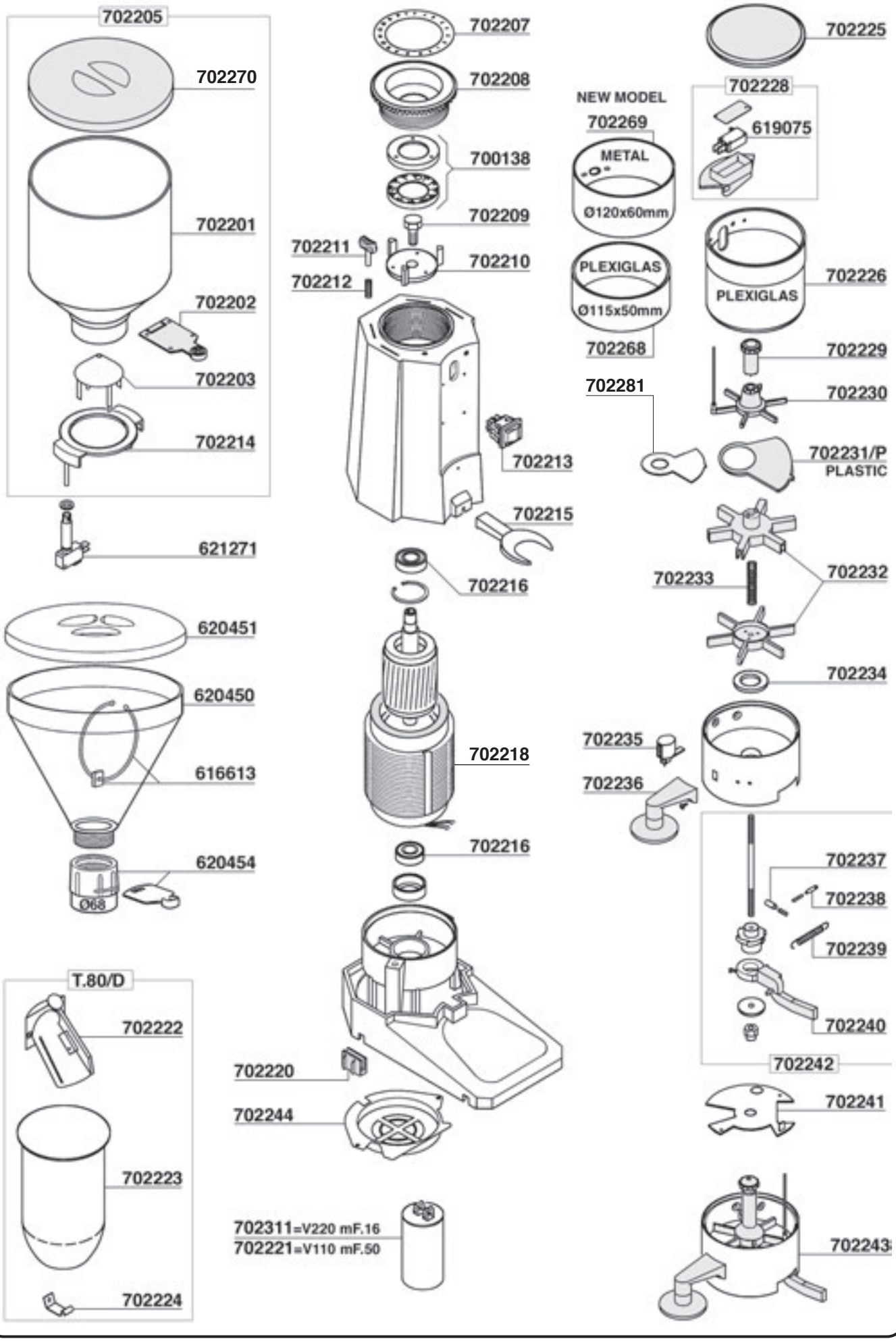

MACINACAFFE'

Tav. 56

QUAMAR MODEL: T.48A

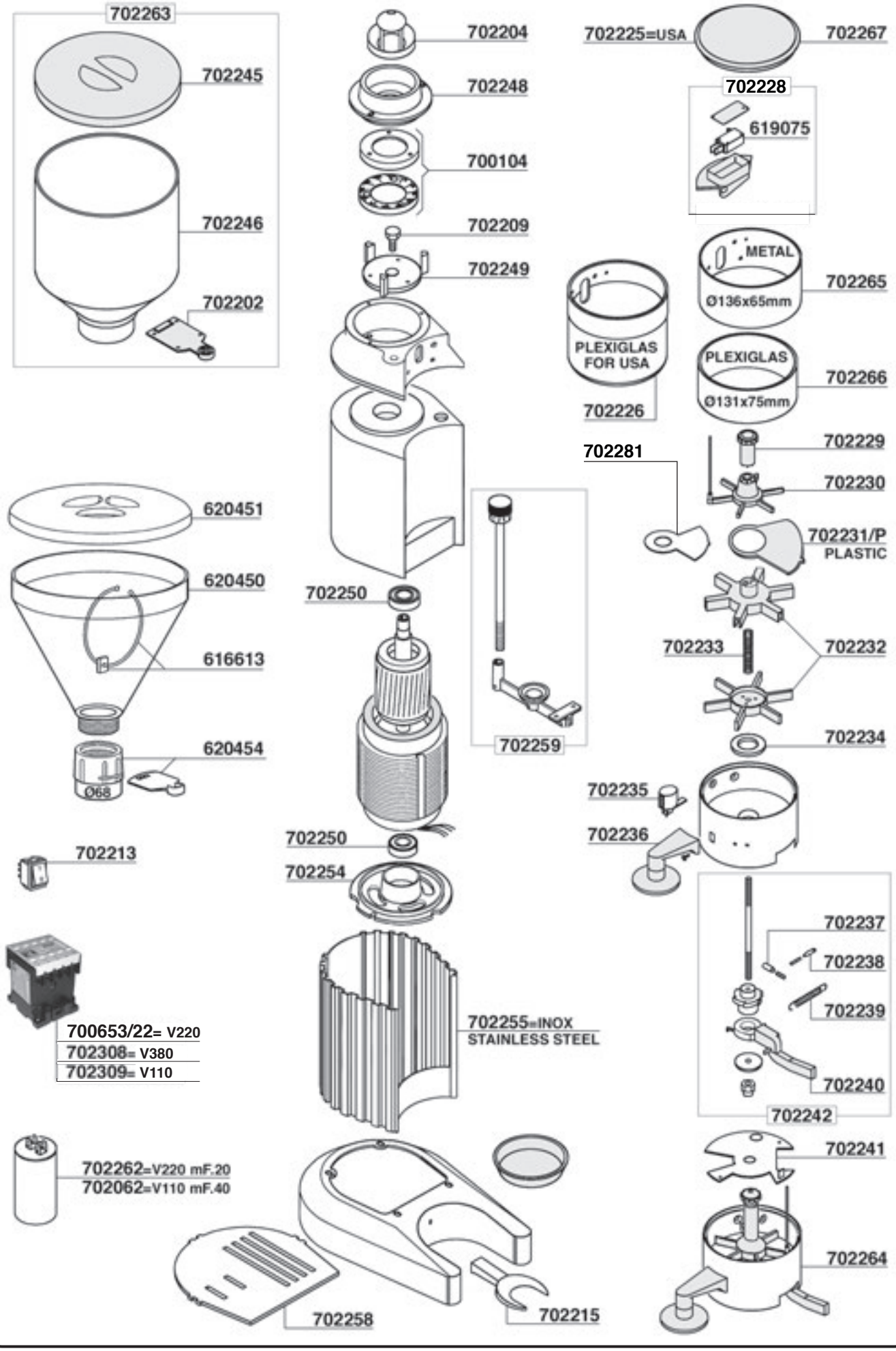

MACINACAFFE' Tav. 57

QUAMAR MODEL: M80 AUT.-MAN.-TEMPORIZZATO

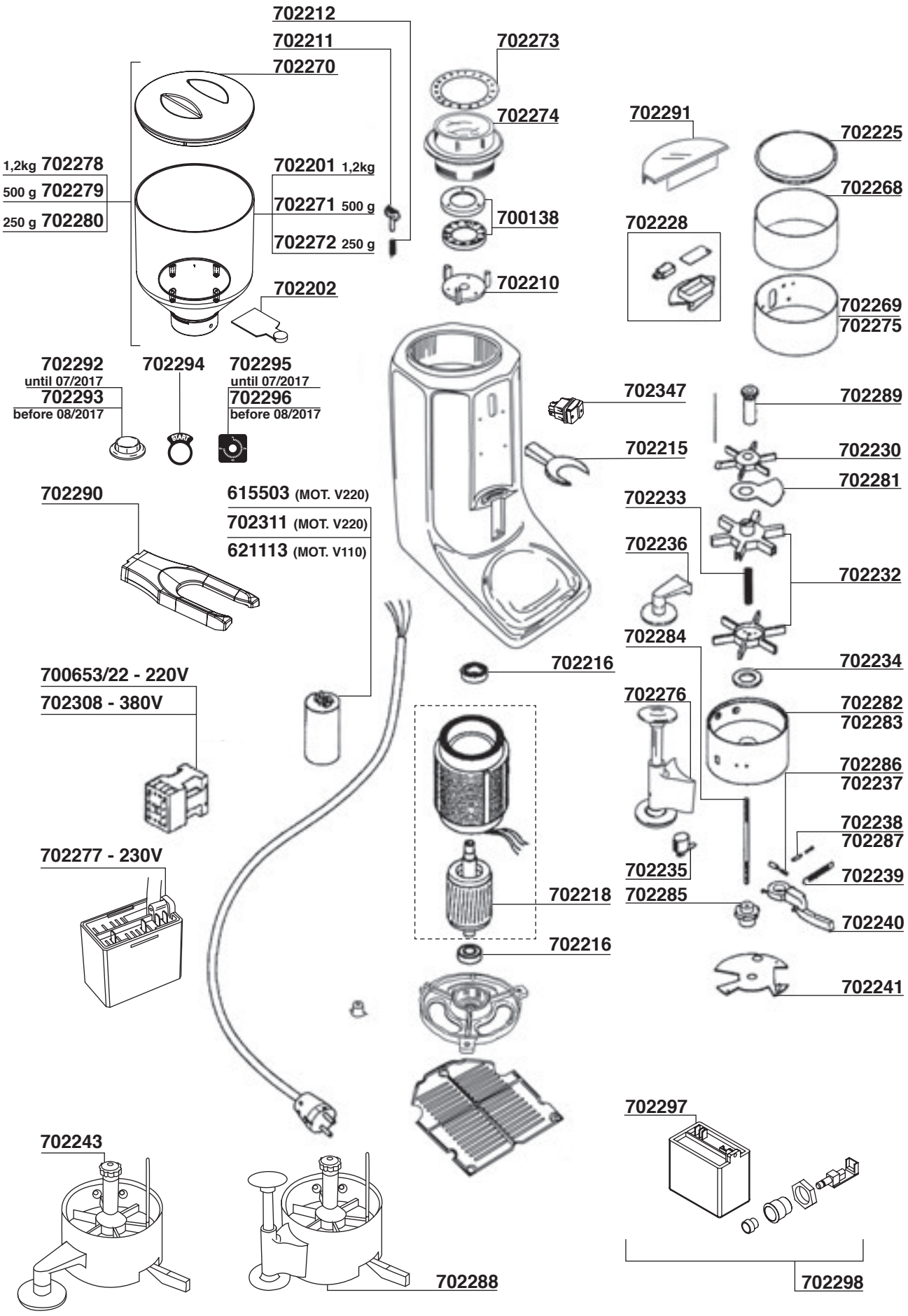

MACINACAFFE'

Tav. 58

QUAMAR MODEL: M80/E

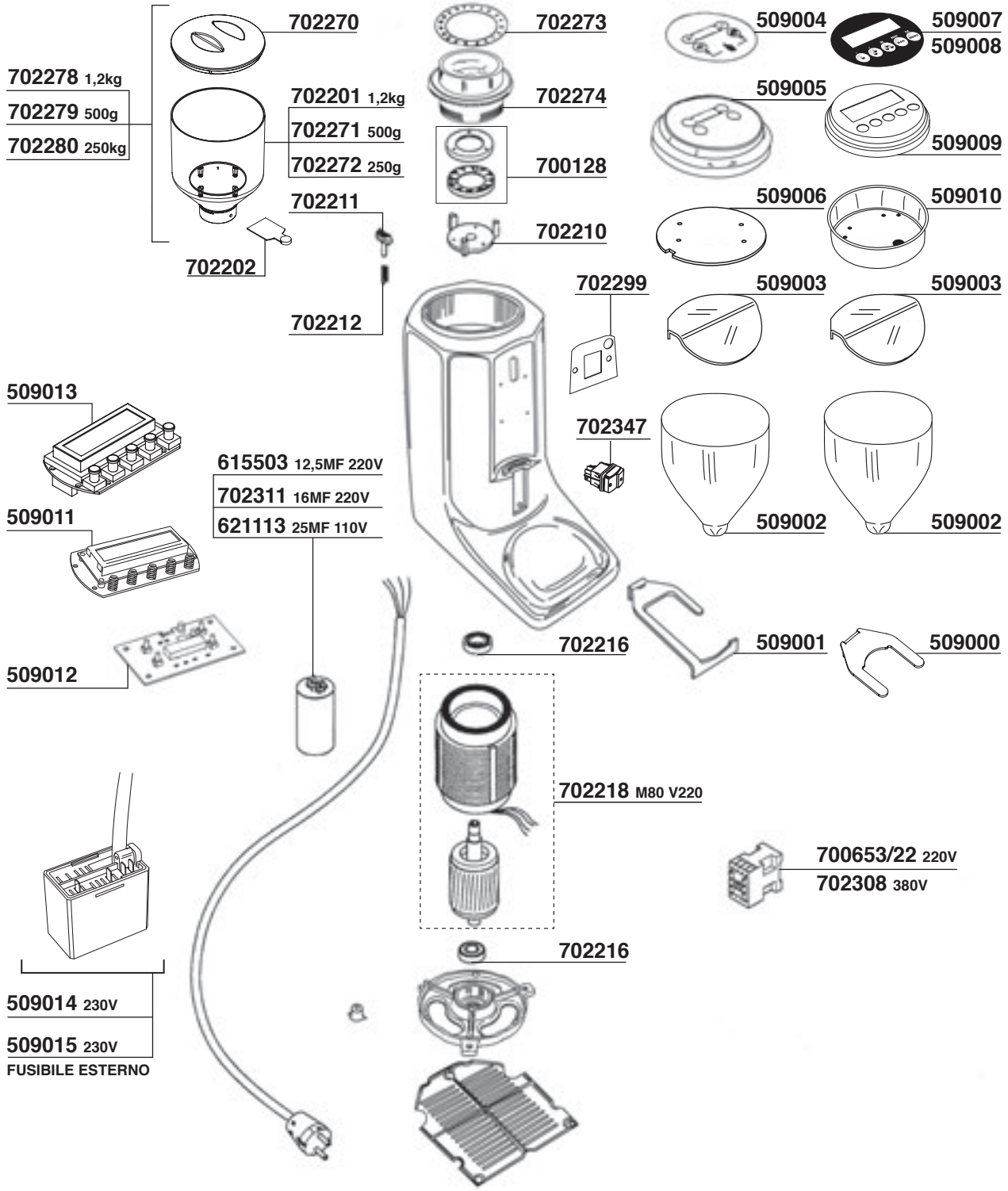

MACINACAFFE’ Tav. 59

RANCILIO : KRIO 65 AT - ST

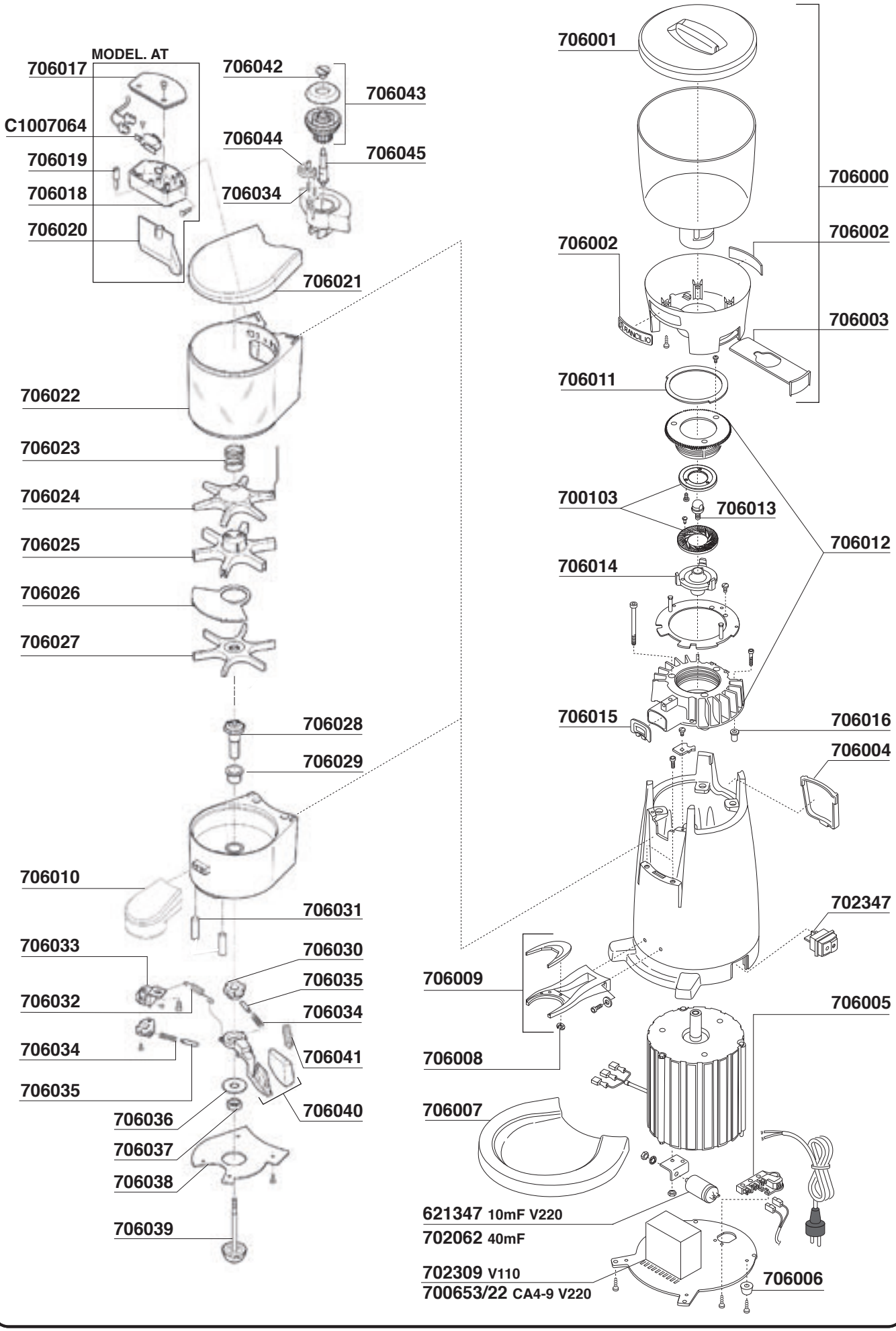

MACINACAFFE'

Tav. 60

RANCILIO : KRIO 65 OnDemand

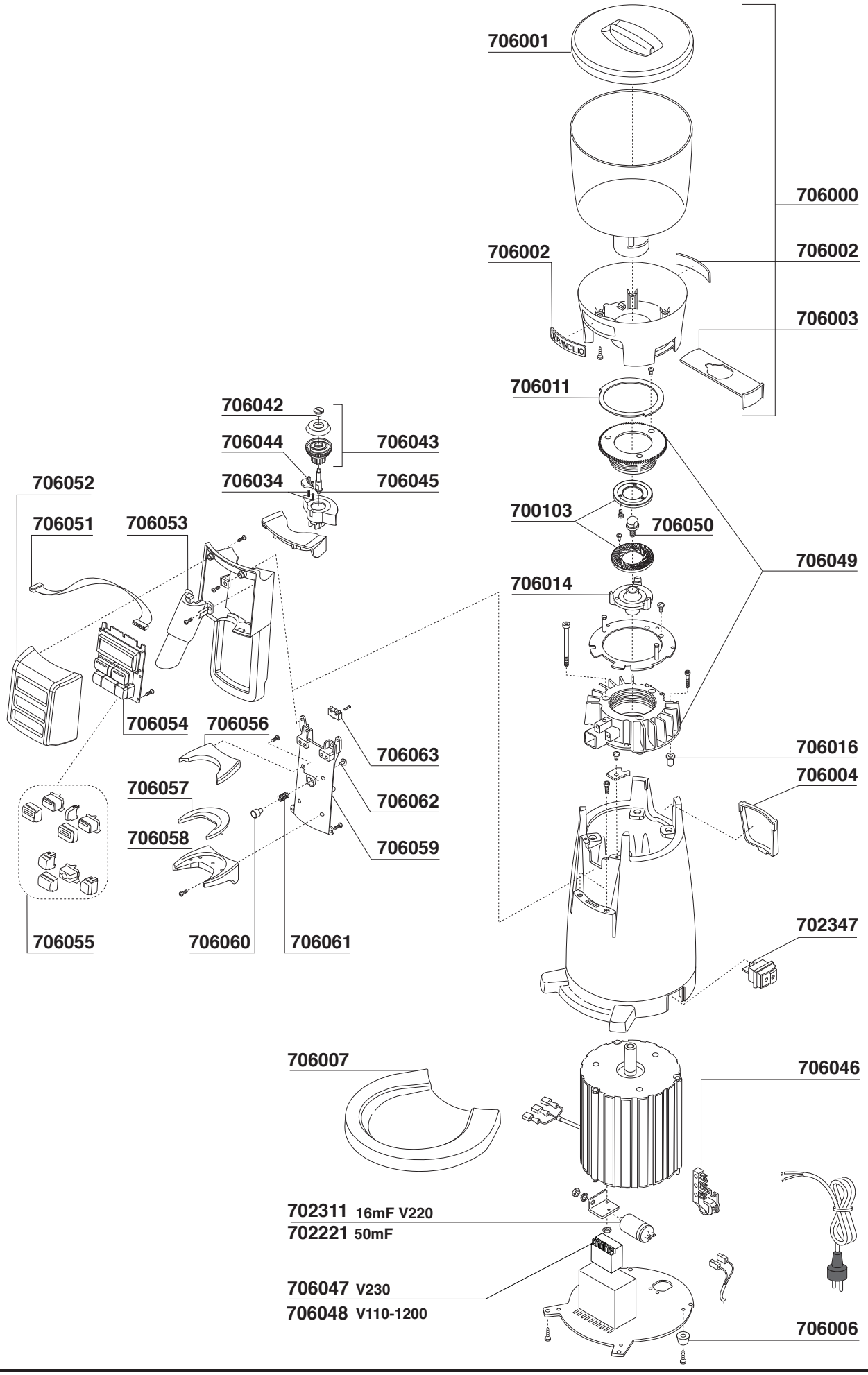

MACINACAFFE'

Tav. 61

ROSSI MODEL: RR45 - CC45

S=MODEL MANUAL A=MODEL AUTOMATIC

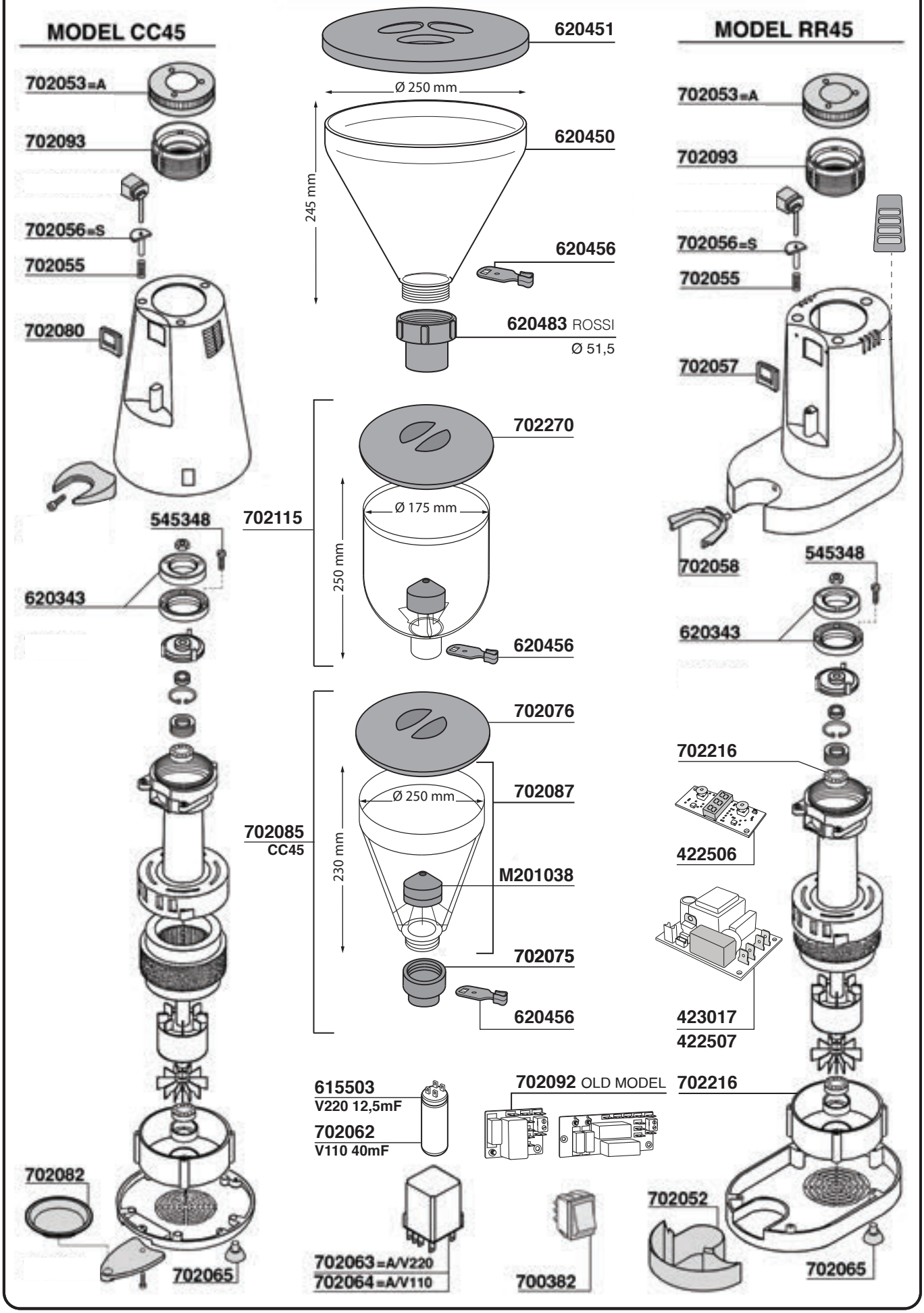

MACINACAFFE'

Tav. 62

ROSSI MODEL: RR45 - CC45

S=MODEL MANUAL A=MODEL AUTOMATIC

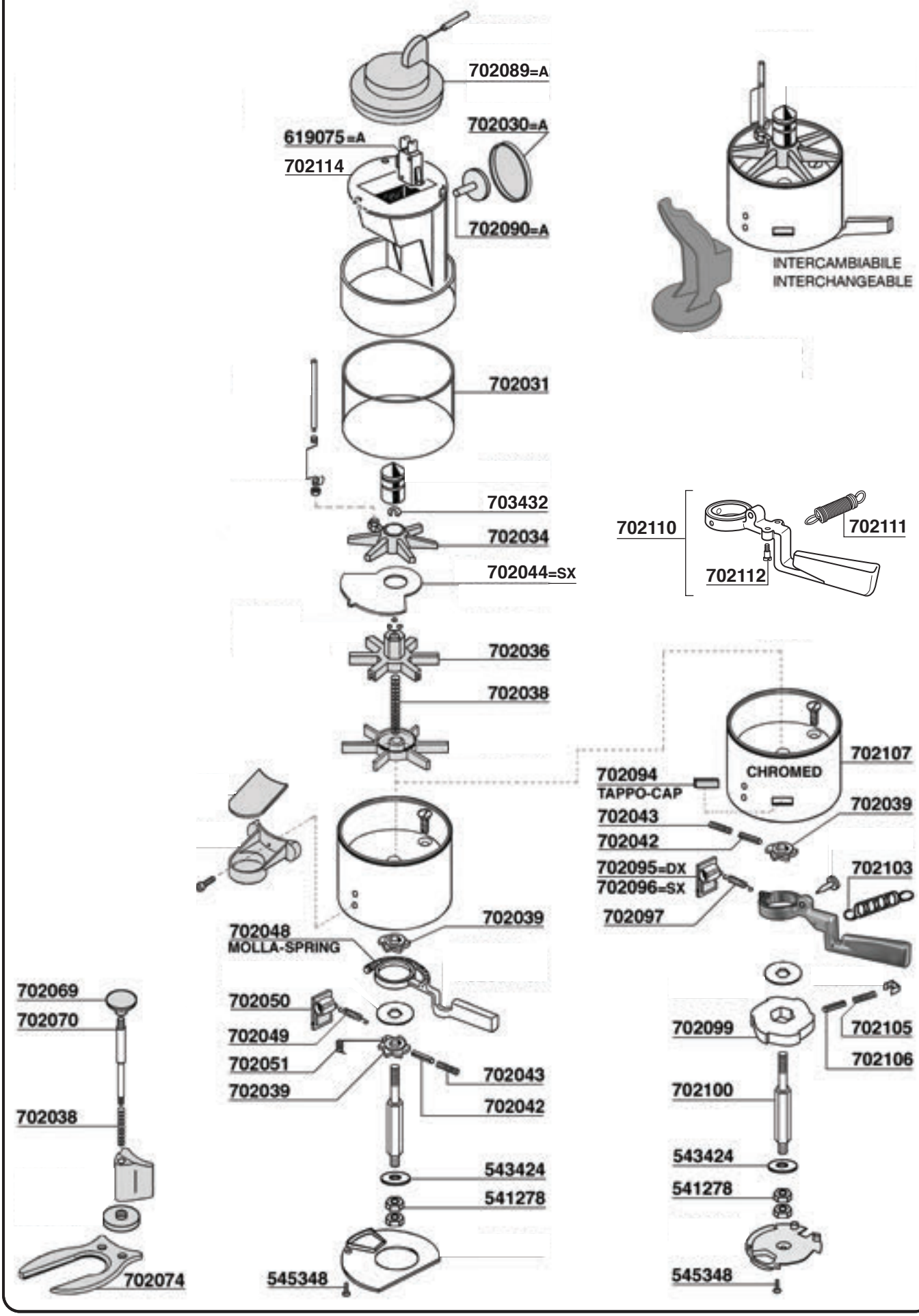

MACINACAFFE' LUX - DELUX

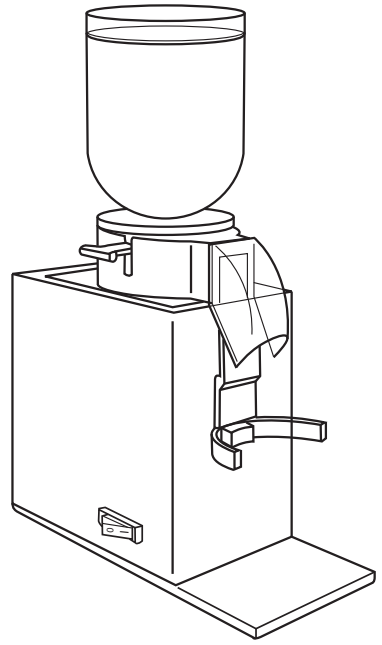

702503 - LUX
MACINACAFFE' COMPLETO

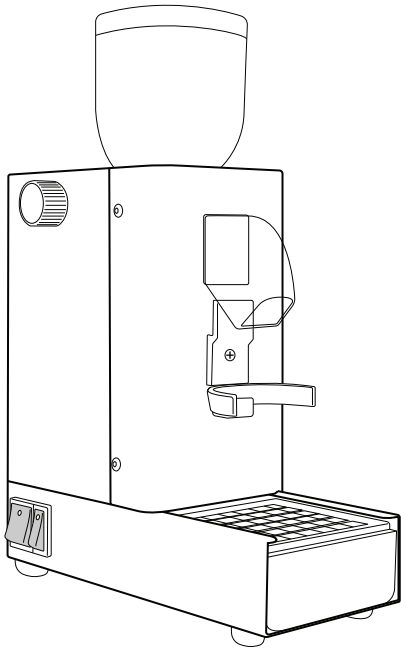

702508 - DELUX
MACINACAFFE' COMPLETO

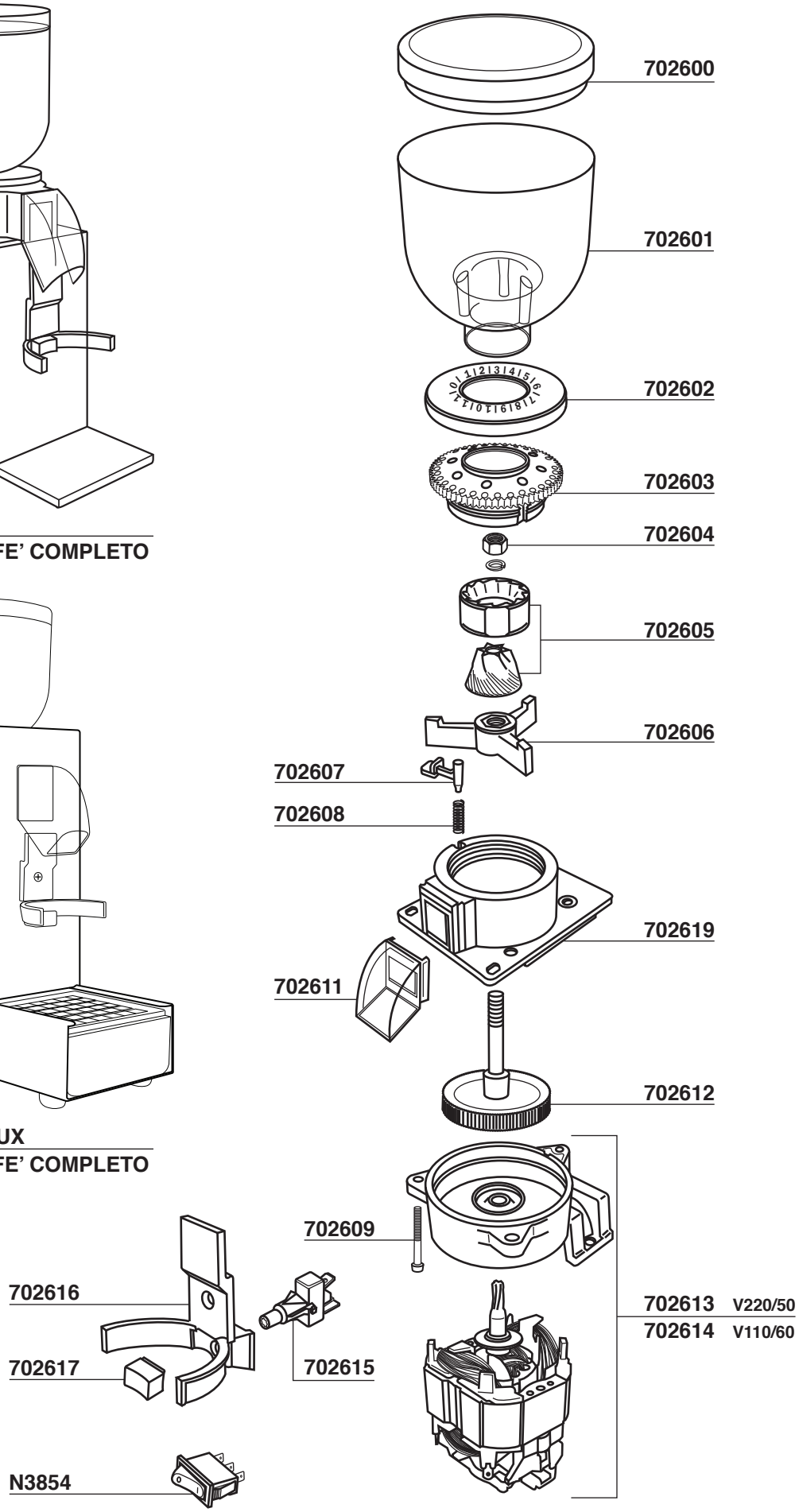

ADATTATORI CAMPANE Tav. 64

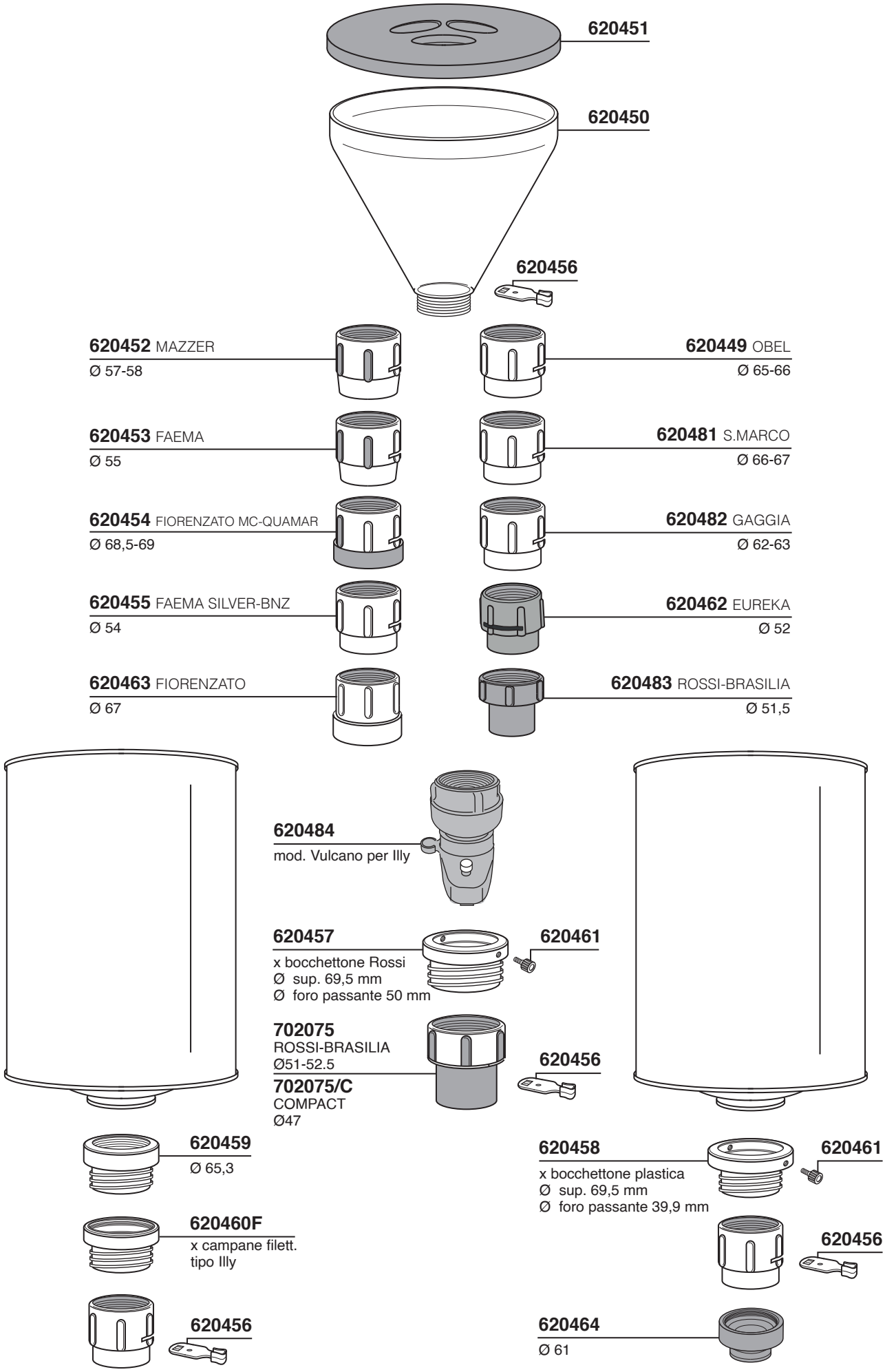

ADATTATORI PER CAMPANA ILLY Tav. 65

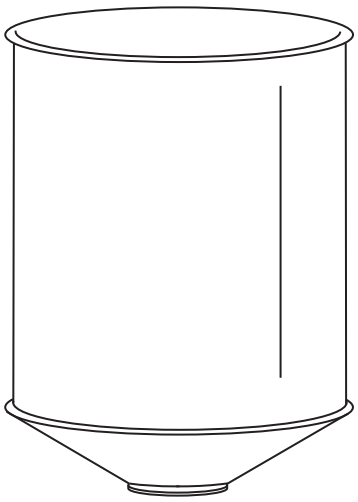

620456

620460F
x campane filett.
tipo Illy

620452 MAZZER
Ø 58

620449 OBEL
Ø 65-66

620453 FAEMA
Ø 55

620481 S.MARCO
Ø 66-67

620454 FIORENZATO MC-QUAMAR
Ø 68,5-69

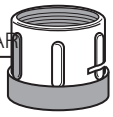

620482 GAGGIA
Ø 62-63

620455 FAEMA SILVER-BNZ
Ø 54

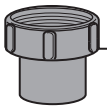

620483 ROSSI-BRASILIA
Ø 51,5

620484
mod. Vulcano per Illy

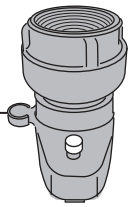

MACINE
grindstones

CODICE *code*	MACINACAFFE' *coffee grinder*	ROTAZIONE *rotation*	Ø *out*	Ø *in*	SPESSORE *thickness*	FORI *holes*
702725	**ANFIM**	SX	50	30	7,5	3
702750	**ANFIM**	SX	54	32	8	3
700131	**ANFIM**	SX	64	37	9	3
707124	**ANFIM CAIMANO/LUSSO**	SX	64	37	9	3
700131/T	**ANFIM TITANIO**	SX	64	37	9	3
620351	**ANFIM - MACAF - OBEL GLOBO**	SX	75	43	9	3
707116	**ANFIM SUPER CAIMANO/SCODY II**	SX	75	43	9	3
620351/T	**ANFIM RIV. TITANIO**	SX	75	43	9	3
700136	**ANFIM 450 RPM**	SX	75	43,5	9	3
700136/T	**ANFIM 450 RPM TITANIO**	SX	75	43,5	9	3
700137	**ANFIM 450 RPM TITANIO ORIGINAL**	SX	75	43,5	10	3
702605	**LUX-DELUX**	DX	38/30	7	20	-
620340	**BRASILIA**	SX	50	31	8,5	3
620343	**BRASILIA**	SX	64	38	9	3
620344	**BRASILIA**	DX	68	13c	25	4
620342	**BRASILIA**	SX	83	45	10	3
700134	**CASADIO**	SX	64	34,5	10	2
700105	**CASADIO**	SX	84	45	10,5	3
620344	**CASADIO CONICHE**	DX	68	13c	25	4
620324	**CASADIO ENEA**	DX	63,5	38	9	3
620312	**CASADIO THEO**	DX	63,5	38	9	3
620313	**CASADIO THEO**	DX	84	46	9	3
620314	**CASADIO CONICHE THEO**	DX	68/49	11	25	4
620374	**CEADO E8/E9/E10/E37S**	DX	83	49	9,5	3
633539	**CIMBALI MAGNUM**	DX	75	43	9	3
633435	**CIMBALI MAGNUM TITANIO**	DX	75	44	9,4	5
700106	**CIMBALI**	DX	54	32	9	3
700102	**CIMBALI-DRM-6S (sesta serie)**	DX	64	37	9	3
700172	**CIMBALI-DRM PIANA (x coniche)**	DX	68	43	8	3
700172/O	**CIMBALI-DRM PIANA (x coniche) ORIGINAL**	DX	68	43	8	3
700111	**CIMBALI MAGNUM ON DEMAND**	DX	63,5	38	9	3
631470	**CIMBALI CONIK - FAEMA MC CONICHE - BNZ**	DX	68	11	25	4
620358	**COMPAK K3 - MAZZER MINI (dosatore) FIORENZATO M.C. F4**	DX	58	33	8,5	3
620356	**COMPAK K6 - WEGA**	DX	63,5	38	9	3
721082	**COMPAK ORIGINAL K3**	DX	58	33	8,5	3

CODICE *code*	MACINACAFFE' *coffee grinder*	ROTAZIONE *rotation*	Ø *out*	Ø *in*	SPESSORE *thickness*	FORI *holes*
721083	**COMPAK ORIGINAL (White) K3**	DX	58	33	8,5	3
721084	**COMPAK ORIGINAL (White) E6**	DX	63,5	38	9	3
721085	**COMPAK ORIGINAL (White) E8 - F8 - R8**	DX	83	46	9,5	3
721086	**COMPAK ORIGINAL CONICHE (red speed) E10 - F10 - K10**	-	68	13	25	3
721087	**COMPAK ORIGINAL CONICHE E10 - F10 - K10**	-	68	13	25	3
721088	**COMPAK ORIGINAL K6**	DX	63	38	9	3
620384	**CUNIL**	SX	65	30/34	9	-
620366	**CUNIL MG19**	SX	59	35/30	9	3
620367	**CUNIL MG21**	DX	59	33/30	9	3/0
620352	**EROS CONICHE**	DX	68	13	25	-
620341	**EUREKA**	DX	50	30	7,5	3
620302	**EUREKA**	DX	64	38	9	3
620322	**EUREKA TRIFASE**	DX	64	38	9	3
620303	**EUREKA**	DX	60	38	9	3
620344	**EUREKA CONICHE**	DX	68	13c	25	4
620349	**EUREKA**	DX	74	38	9	3
729000	**EUREKA MYTHOS TITANIO ORIGINAL**	DX	74	37	9	3
620383	**EUREKA MYTHOS TITANIO**	DX	74	37	9	3
508962	**FAEMA FP - FUTURMAT**	SX	54	31	8	3
616730	**FAEMA MP - MPN**	DX	54	31	8	3
508880	**FAEMA FM / FUTURMAT ARIETE FM FP**	SX	62	38	9	3
619956	**FAEMA SILVER - BNZ**	DX	64	38	9	3
631470	**FAEMA MC CONICHE-BNZ CIMBALI CONIK**	DX	68	11	25	4
633539	**FAEMA MD 2000-3000**	DX	75	43	9	3
633435	**FAEMA MD 2000-3000**	DX	75	43,5	9,4	3
700138	**FIORENZATO - FIORENZATO DOGE**	DX	63	38	9,5	3
620354	**FIORENZATO/WEGA**	SX	63	38	9,5	3
620364	**FIORENZATO DOGE CONICHE**	DX	71	13c	25	3
700104	**FIORENZATO-FIORENZATO DOGE**	DX	83	45	10	3
620319	**FIORENZATO M.C. F5**	DX	64	37	8,5	3
720068	**FIORENZATO M.C. F5 ORIGINAL**	DX	64	37	8,5	3
720076	**MADE IN FIORENZATO M.C. F5 ORIGINAL**	DX	64	37	8,5	3
700135	**FIORENZATO M.C. 6GA**	DX	83	49	9,5	3
620320	**FIORENZATO M.C. F83E ISTANTANEO**	DX	83	49	9,5	3
720077	**MADE IN FIORENZATO M.C. F6 ORIGINAL**	DX	83	49	9,5	3
720080	**MADE IN FIORENZATO M.C.F83E ORIGINAL**	DX	83	49	9,5	3
720049	**FIORENZATO F64E ON DEMAND**	DX	64	37	8,5	3
720078	**MADE IN FIORENZATO M.C. F64E ORIGINAL**	DX	64	37	9	3
720057	**FIORENZATO F64EVO**	DX	64	37	8,5	3

CODICE *code*	MACINACAFFE' *coffee grinder*	ROTAZIONE *rotation*	Ø *out*	Ø *in*	SPESSORE *thickness*	FORI *holes*
720079	MADE IN FIORENZATO M.C.F64EVO ORIGINAL	DX	64	37	8,5	3
720075	MADE IN FIORENZATO F4A-F4E ORIGINAL	DX	58	33	8,5	3
720074	FIORENZATO M.C. F63K / 63KE ORIGINAL	/	63	13	23	3
720073	FIORENZATO M.C. F71 ORIGINAL	/	71	13	25	3
620347	GAGGIA BABY	DX	50	30	7,5	3
700141	GAGGA - ARISTARCO	DX	58	34	8	3
620310	GAGGIA - ARISTARCO	DX	74	42	9	3
700133/4	GAGGIA - ARISTARCO	DX	84	46	9	3
700133/5	GAGGIA MILANO	DX	85	44	9	3
702824	MACAP M4-M5-M5 PLUS 1.400 giri	DX	58	34	8,5	3
620300	MACAP MC6 - MX 1.400 giri	DX	65	38	8,5	3
620304	MACAP MC6 - MX 900 giri	DX	65	38	8,5	3
620301	MACAP MC7 - M7	DX	74	42	9	3
620308	MACAP SERIE M4-M5-M5D	DX	58	34	8,5	3
620306	MACAP M7A900	DX	74	43	9	3
620365	MACAP MXK CONICHE FIORENZATO F63K	DX	63	13	23	3
620344	MACAP M7K CONICHE	DX	68	13c	25	4
702621	MACAP MXD 75/900 TITANIO ORIGINAL	DX	74	42	9,5	3
620305/K	MAHLKÖNIG K30 11/12 DENT	SX	65	38	8,5	2
620323	MAHLKÖNIG EK43-EKK43	SX	98	54	9	3
620379	MAHLKÖNIG EK43-EKK43 ORIGINAL	SX	98	54	9	3
620378	MAZZER LUX MONOFASE	DX	61	35	8,5	3
620358	MAZZER MINI(dosatore) FIORENZATO M.C. F4 - COMPAK K3	DX	58	33	8,5	3
620373	MAZZER MINI(dosatore) ORIGINAL	DX	58	33	8,5	3
620376	MAZZER MINI ON DEMAND ORIGINAL	DX	64	37	8,5	3
700108/T	MAZZER JOLLY TRIFASE	DX	64	37	8,5	3
700108/M	MAZZER JOLLY ORIGINAL MONOFASE FOR DOSER AND ON DEMAND	DX	64	37	8,5	3
700108/KT	MAZZER SUPERJOLLY MONOFASE	DX	64	37	8,5	3
620319	MAZZER JOLLY MONOFASE	DX	64	37	8,5	3
700135	MAZZER MAJOR	DX	83	49	9,5	3

CODICE *code*	MACINACAFFE' *coffee grinder*	ROTAZIONE *rotation*	Ø *out*	Ø *in*	SPESSORE *thickness*	FORI *holes*
700135/T	MAZZER MAJOR TRIFASE/ROYAL MONOFASE	DX	83	49	9,5	3
700135/M	MAZZER MAJOR ORIGINAL MONOF. FOR DOSER AND ON DEMAND	DX	83	49	9,5	3
700135/TM	MAZZER MAJOR ORIGINAL TRIFASE ROYAL MONOFASE	DX	83	49	9,5	3
700132	MAZZER MAJOR TRIF. ROYAL MONOF. TITANIO	DX	83	49	9,5	3
620362	MAZZER ROBUR CONICHE TRIF.	DX	83	14c	25	3
620375	MAZZER ROBUR-KOLD ORIGINAL TRIF.	DX	83	14c	25	3
620363	MAZZER ROBUR CONICHE MONOF.	DX	71	14c	25	3
620372	MAZZER ROBUR-KOLD ORIGINAL C. M.FOR DOSER AND ON DEMAND	DX	71	14c	25	3
620371	MAZZER KONY CONICHE MONOFASE	DX	63	12c	23	3
620369	MAZZER KONY ORIGINAL C.M. FOR DOSER AND ON DEMAND	DX	63	12c	23	3
620370	MAZZER KONY CONICHE TRIFASE ORIGINAL	DX	67	14c	23	3
620302	NUOVA SIMONELLI SERIE MDX	DX	64	38	9	3
620322	NUOVA SIMONELLI TRIFASE SERIE MDX	DX	64	38	9	3
620341	NUOVA SIMONELLI GRINTA	DX	50	30	7,5	3
620349	NUOVA SIMONELLI MDL-MDLCA	DX	74	38	9	3
729000	NUOVA SIMONELLI MYTHOS TITANIO ORIGINAL	DX	74	37	9	3
620383	NUOVA SIMONELLI MYTHOS TITANIO	DX	74	37	9	3
620348	OBEL JUNIOR	SX	50	31	8	3
620345	OBEL DSQ - EB	SX	64	38	9	3
620368	OBEL	SX	75	43	9	3
620351	OBEL - ANFIM - MACAF	SX	75	43	9	3
700138	QUAMAR	DX	63	38	9,5	3
700128	QUAMAR M80 ON DEMAND	DX	63	38	9,5	3
620348	RANCILIO ROCKY-JACKY MD40	SX	50	31	8	3
700103	RANCILIO MD50/PROMAC MD64	SX	64	38	9	3
700140	RANCILIO MD80/PROMAC MD75	SX	75	43	10,5	3
620343	ROSSI	SX	64	38	9	3
620344	ROSSI CONICHE	DX	68	13c	25	4

MACINE
grindstones

CODICE *code*	MACINACAFFE' *coffee grinder*	ROTAZIONE *rotation*	Ø *out*	Ø *in*	SPESSORE *thickness*	FORI *holes*
620353	**SAECO**	SX	43	25	6,5	3
620359	**SAECO CONICHE / GAGGIA**	DX	48	10	20	-
620359/P	**SAECO CONICHE PERFORMANCE**	DX	48	10	20	-
620355	**SAN MARCO**	DX	64	37	8,5	3
620310	**SAN MARCO**	DX	74	42	9,5	3
700133/4	**SAN MARCO**	DX	84	46	9	3
620321	**COPPIA MACINA PIANA+CONICA "NR" PIANA**	DX	84	50	9	3
	CONICA	_	45	13c	18	-
620360	**SAN MARCO CONICHE**	DX	68	13c	25	4b
740070	**SAN MARCO ORIGINAL**	DX	64	37	8,5	3
740082	**SAN MARCO ORIGINAL**	DX	84	45	9	3
740089	**SAN MARCO SEMI-CONICAL ORIGINAL**	DX	84/45	50/13	18/9	3
740094	**SAN MARCO ORIGINAL**	DX	68/49	40/13	25	4
620346	**SANTOS**	SX	63,5	35,5	9	3
620377	**SANTOS ORIGINAL**	SX	63,5	35,5	9	3
620354	**WEGA - FIORENZATO**	SX	63	38	9,5	3
620356	**WEGA - COMPAK**	DX	63,5	38	9	3
620356/K	**WEGA - COMPAK**	DX	63,5	38	9	3
620357	**WEGA - COMPAK**	DX	80	41	10	3
620307	**WEGA - COMPAK - OBEL CONICHE**	DX	68	13	25	4
620385	**WEGA ORIGINAL 5.8 MINIMAX / INSTANT E**	DX	58	33	8,5	3
620386	**WEGA CONICAL ORIGINAL 6.8 KONIK / KONIK INSTANT**	_	68	13	25	3
620387	**WEGA ORIGINAL 6.4 A / 6.4 A SILENZIO**	DX	63	38	9	3
633546	**WEGA ORIGINAL 8.0 INSTANT**	DX	80	41	10	3

CODICE *code*	MACINACAFFE' *coffee grinder*	ROTAZIONE *rotation*	Ø *out*	Ø *in*	SPESSORE *thickness*	FORI *holes*
	MACINE FOOD FRIENDLY					
633536	**CIMBALI-DRM-6S**	DX	64	37	9	3
633538	**FAEMA MD 2000-3000**	DX	75	43,5	9	3
633531	**MACAP CONICHE MONOFASE**	DX	68	13	25	4
633537	**MAZZER JOLLY MONOFASE**	DX	64	37	8,5	3
633530	**MAZZER KONY CONICHE MONOF.**	DX	63	12c	23	3
633540	**MAZZER MAJOR**	DX	83	49	9,5	3
633542	**OBEL DSQ-EB**	SX	64	38	9	3
633545	**QUAMAR T48 ORIGINAL**	DX	83	45	10	3
633532	**RANCILIO**	SX	63,5	38	9	3
633541	**ROSSI/BRASILIA**	SX	64	38	9	3
633543	**WEGA-COMPAK**	DX	63,5	38	9	3
633544	**WEGA-COMPAK-OBEL CONICHE**	DX	68	13	25	4
	MACINE INDUSTRIALI					
620311	**CIAT**	DX	108	38	11	3
620311/13	**CIAT**	DX	108	38	13	3
620309	**CIAT mod MT4-VITTORIA mod MS9**	SX	123	45	12	3
620315	**DITTING mod KF/KFR 804**	SX	80	40	9	2
620316	**DITTING mod KF/KFA/KFR 903**	SX	90	45	9	2
620317	**DITTING mod KF/KFA/KFR 1203**	SX	120	60	9	4
620318	**DITTING mod KF/KFA/KFR 1403**	SX	140	70	9	4
620329	**PETRONCINI ORIGINAL mod S/2-10**	DX/SX	120	50	10	4

TRATTAMENTO ACQUA

Tav. 01

ADDOLCITORI MANUALI SERIE LT - IV

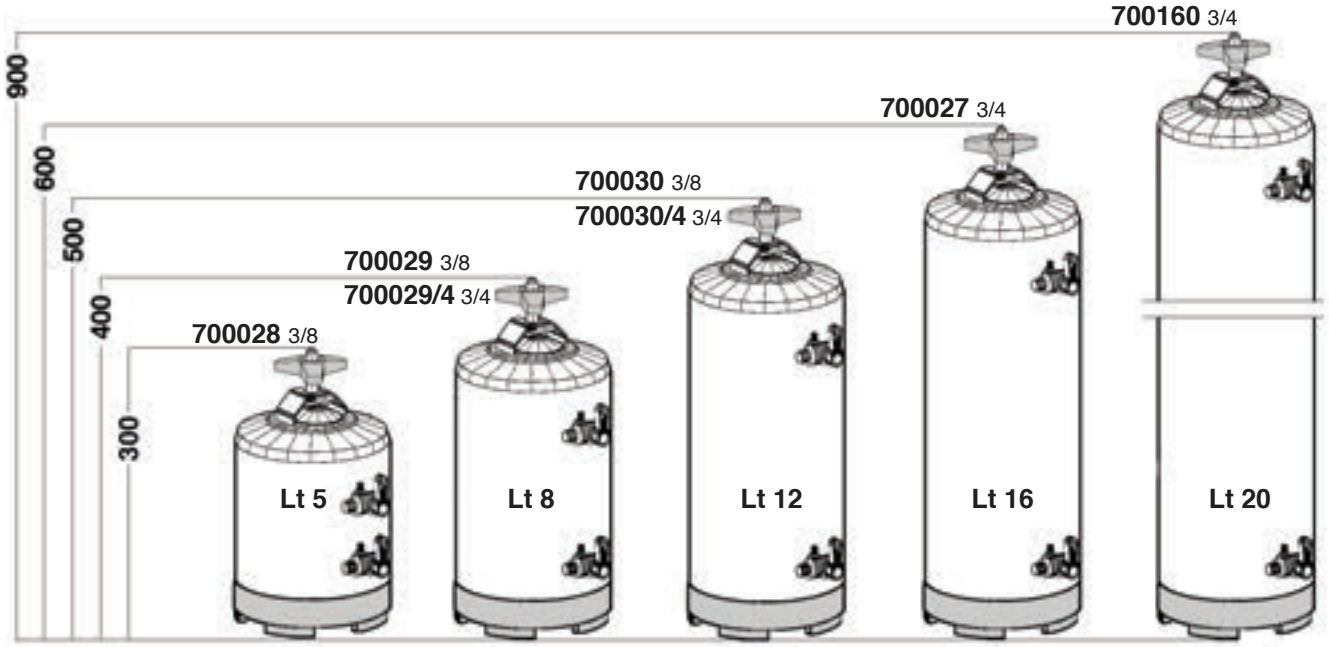

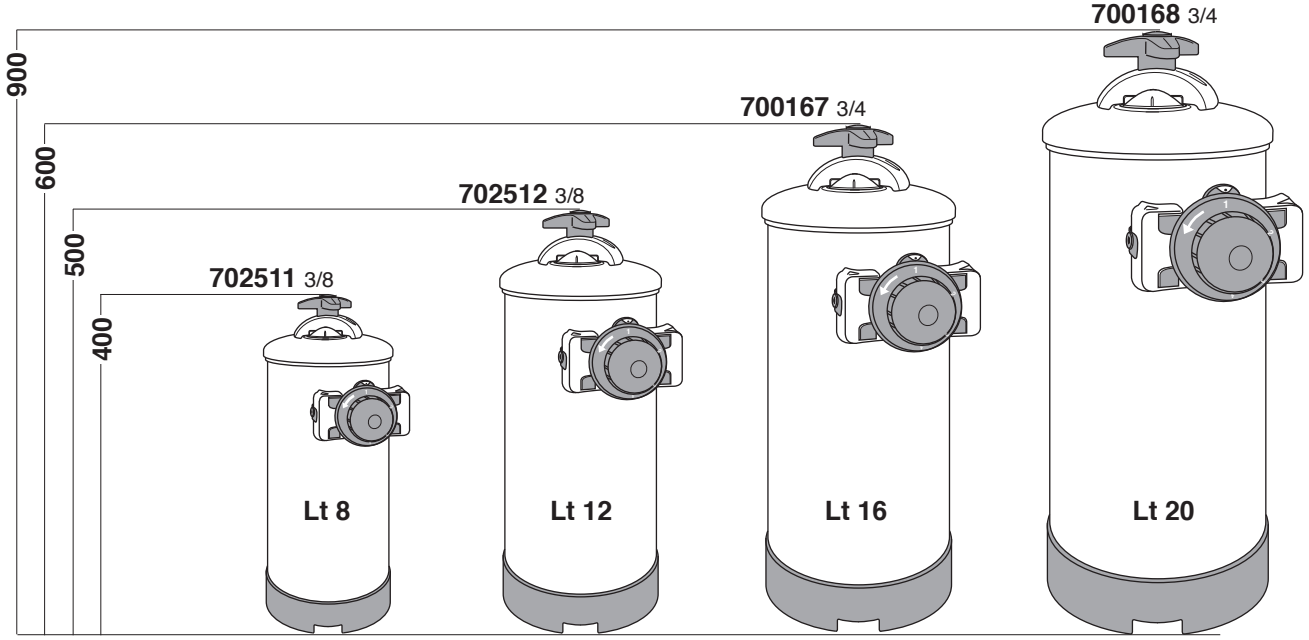

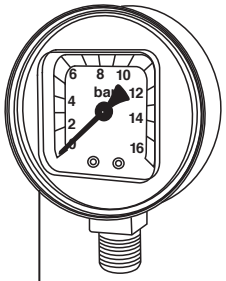

300302 16BAR

manometro consigliato per 620392
suggested manometer for 620392

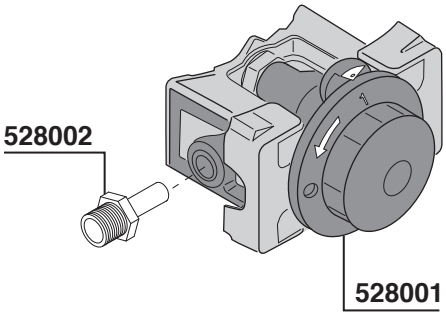

620571 =1/4 MF

per collegare 300302 e 620392
for connect 300302 and 620392

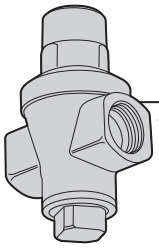

620388
3/8 GAS

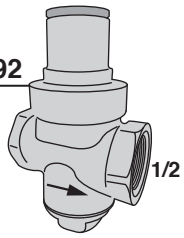

620392

riduttore pressione con attacco manometro
pressure reducer with manometer connection

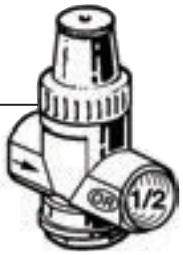

620400

riduttore pressione
pressure reducer

TRATTAMENTO ACQUA Tav. 02

ADDOLCITORI MANUALI SERIE ERA

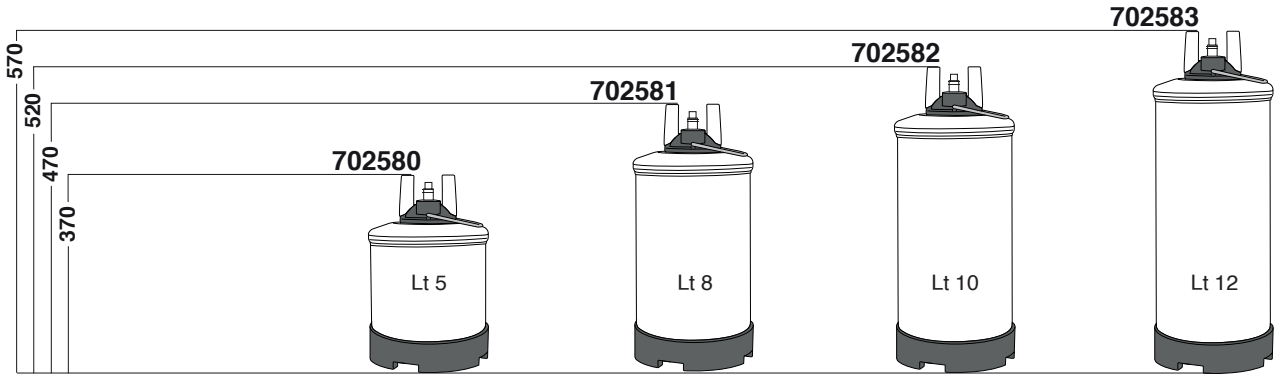

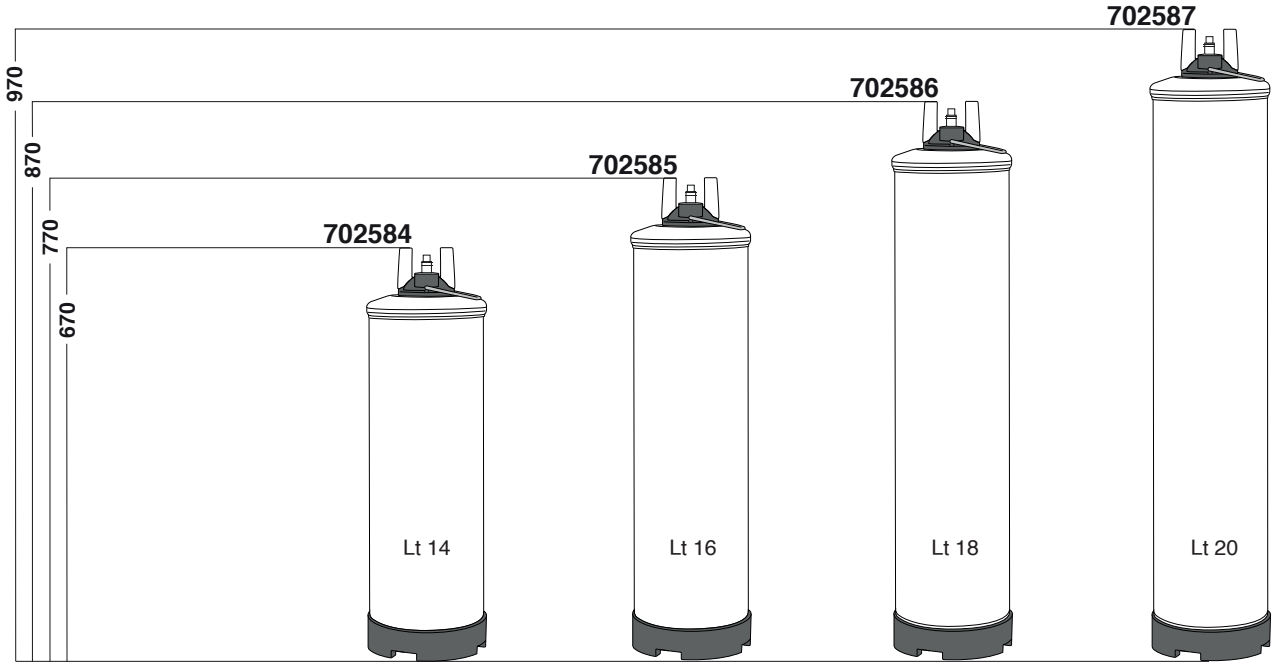

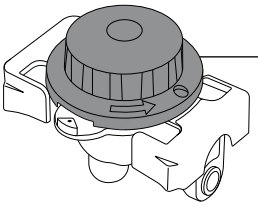

702577 3/8"G

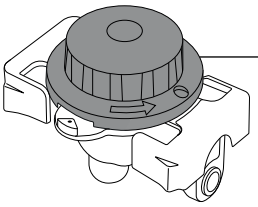

702578 3/4"G

702528

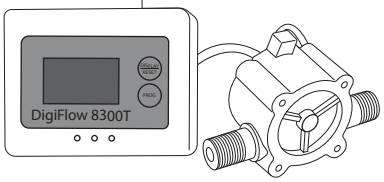

702588

SISTEMA DI RIGENERAZIONE ERA
REGENERATION SYSTEM ERA

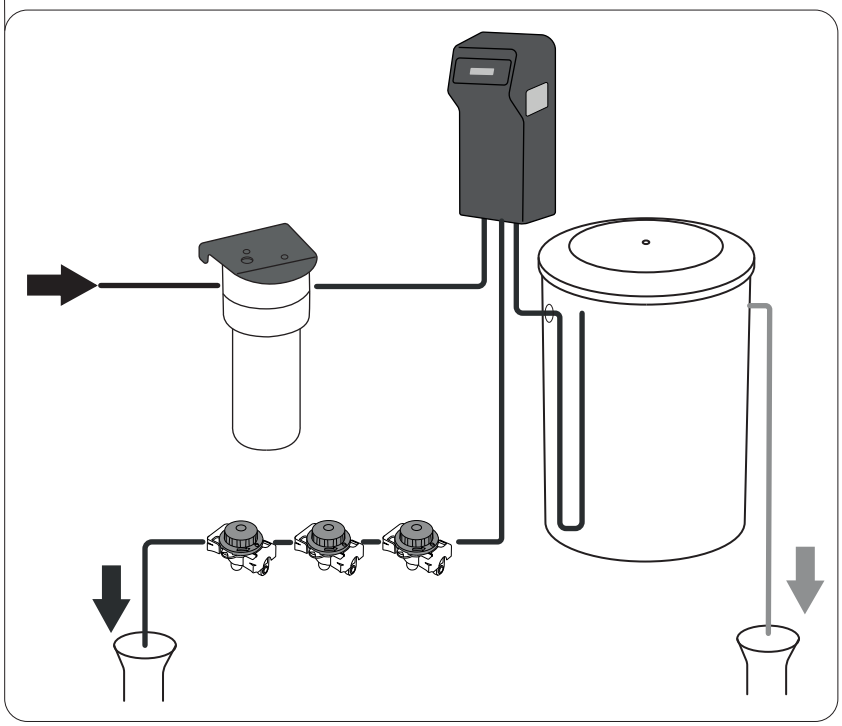

TRATTAMENTO ACQUA Tav.03

ADDOLCITORI AUTOMATICI CRONOMETRICI

COMPLETI DI / *COMPLETE WITH*: **CONTROLLO SALE** / *SALT CONTROL* - **DISPOSITIVO ANTIALLAGAMENTO** / *ANTI-FLOODING DEVICE* - **MISCELATORE ACQUA** / *WATER MIXER*

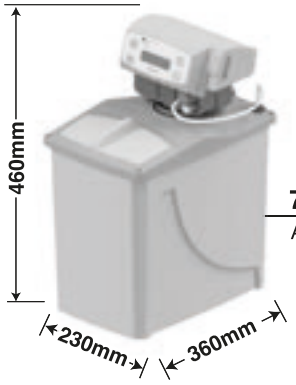

702597
ALIA LT.5

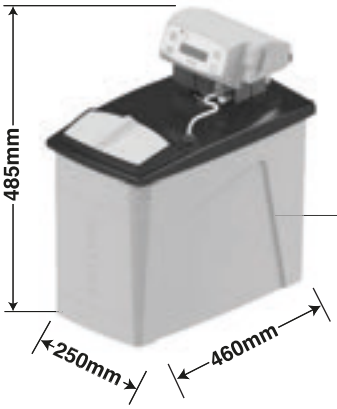

702598
ALIA LT.8

702599
ALIA LT.12

MISCELATORE ACQUA / *WATER MIXER*

702523
GIX LT. 5

702524
GIX LT. 8

700560
GIX LT. 26

MISCELATORE ACQUA / *WATER MIXER* - **VOLUMETRICO** / *VOLUMETRIC*

702534
VOLUMETRICO
VOLUMETRIC
GIX LT. 5

MISCELATORE ACQUA / *WATER MIXER*

702529
ISI LT. 5

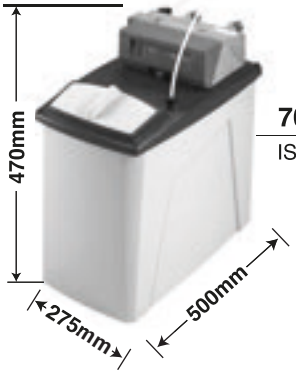

702533
ISI LT. 8

ADDOLCITORI AUTOMATICI ALIA VOLUMETRICI

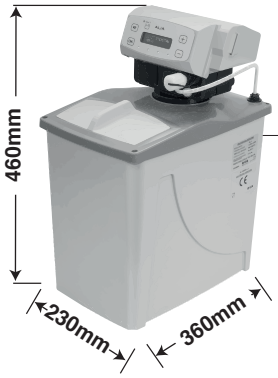

702597/V
LT.5

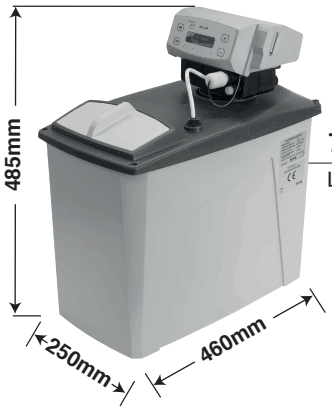

702598/V
LT.8

702599/V
LT.12

TRATTAMENTO ACQUA Tav. 04

FILTRI ADDOLCITORI CASA E RESINE

KIT CARTUCCIA FILTRANTE
PER DEPURATORI MANUALI
FILTER CARTRIDGE KIT
FOR MANUAL SOFTENERS

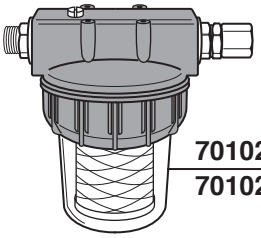

701020 5” 3/8” MF
701021 5“ 3/4” MF

KIT CARTUCCIA FILTRANTE
PER DEPURATORI AUTOMATICI
FILTER CARTRIDGE KIT
FOR AUTOMATIC SOFTENERS

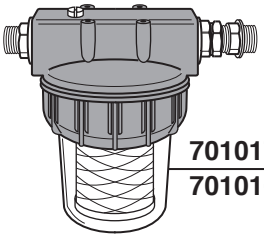

701017 5” 1/2” MM
701016 5” 3/4” MM

KIT CARTUCCIA CARBONI ATTIVI
PER DEPURATORI AUTOMATICI
ACTIVATED CARBON CARTRIDGE KIT
FOR AUTOMATIC SOFTENERS

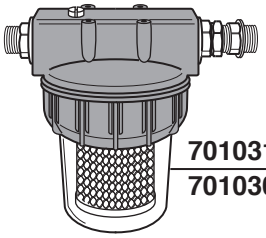

701031 5” 1/2” MM
701030 5” 3/4” MM

KIT CARTUCCIA CARBONI ATTIVI
PER DEPURATORI MANUALI
ACTIVATED CARBON CARTRIDGE KIT
FOR MANUAL SOFTENERS

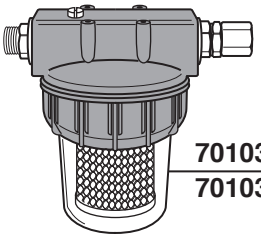

701034 5” 3/8” MF
701035 5” 3/4” MF

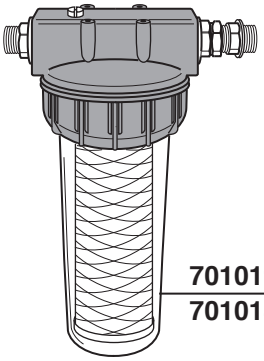

701019 9” 1/2” MM
701018 9” 3/4” MM

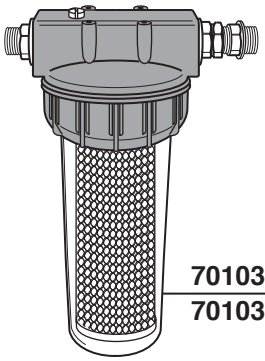

701033 9” 1/2” MM
701032 9” 3/4” MM

CARTUCCIA FILTRANTE
FILTER CARTRIDGE

701022
5”

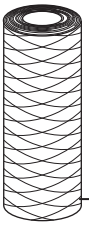

701023
9”

CARTUCCIA CARBONI ATTIVI
ACTIVATED CARBON CARTRIDGE

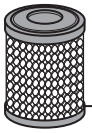

701036
5”

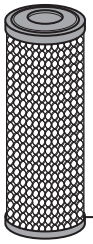

701037
9”

701024
CHIAVE - KEY

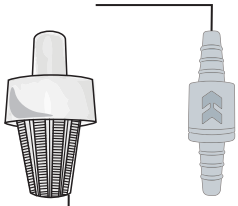

411443

408818

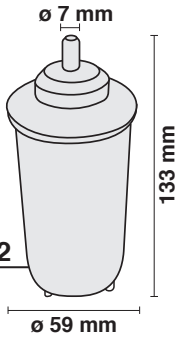

701012
FILTRO
DECALCIFICANTE

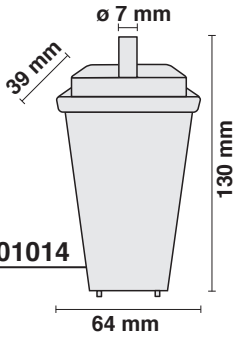

701014

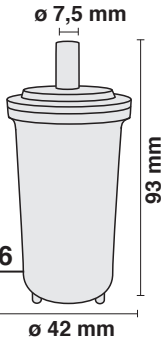

701046

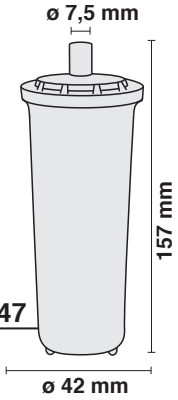

701047

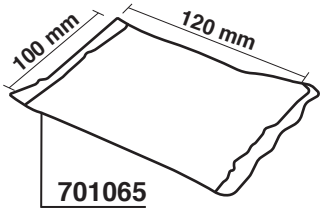

701065

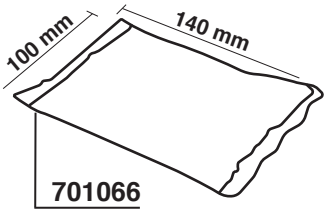

701066

ADDOLCITORE UNIVERSALE
UNIVERSAL WATER SOFTNER

591177 KG.10
591180 KG.25

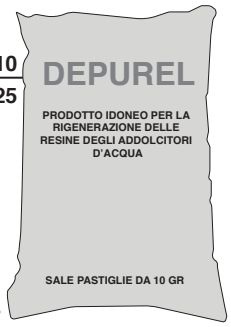

700118
RESINE 25 LT

TRATTAMENTO ACQUA Tav.05

3M

702521 3/8

702522 3/8 JG

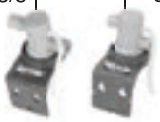

702521 3/8

702522 3/8 JG

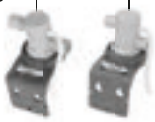

702521 3/8

702522 3/8 JG

702571

702559
HF40

702565
HF40-S

702570
6000 Lt.

702566
HF37

702567
MEMBRANE

702568
CARBON BLOCK
0,5 um

702563

702564
WITH TANK

702528

702520
CARTINE TORNASOLE
LITTMUS PAPER

620506
KIT PROVA DUREZZA
HARDNESS TEST

BWT

800194

"BWT BESTMAX SMART 35"
CARTUCCIA FILTRANTE / FILTERING CARTRIDGE
7800 Lt - (829Kg/caffè)
MISURE / SIZE
H.502mm-Ø147mm
MISURE CON TESTA / SIZE WITH HEAD
H.527mm-Ø147mm

800197

"BWT BESTMAX SMART 40"
CARTUCCIA FILTRANTE / FILTERING CARTRIDGE
9300 Lt - (1329Kg/caffè)
MISURE / SIZE
H.448mm-Ø147mm
MISURE CON TESTA / SIZE WITH HEAD
H.502mm-Ø147mm

800198

"BWT BESTMAX SMART 42"
CARTUCCIA FILTRANTE / FILTERING CARTRIDGE
13000 Lt - (1857Kg/coffee)
MISURE / SIZE
H.520mm-Ø185mm
MISURE CON TESTA / SIZE WITH HEAD
H.580mm-Ø185mm

800199

"BWT BESTMAX SOFT V"
CARTUCCIA FILTRANTE / FILTERING CARTRIDGE
2500 Lt - (357Kg/caffè)
MISURE / SIZE
H420mm-Ø115mm
MISURE CON TESTA / SIZE WITH HEAD
H.445mm-Ø115mm

800155

"BWT BESTMAX SOFT M"
CARTUCCIA FILTRANTE / FILTERING CARTRIDGE
3800 Lt - (543Kg/coffee)
MISURE / SIZE
H.475mm-Ø130mm
MISURE CON TESTA / SIZE WITH HEAD
H.500mm-Ø130mm

800156

"BWT BESTMAX SOFT L"
CARTUCCIA FILTRANTE / FILTERING CARTRIDGE
5200 Lt - (743Kg/coffee)
MISURE / SIZE
H.500mm-Ø145mm
MISURE CON TESTA / SIZE WITH HEAD
H.530mm-Ø145mm

800189

"BWT BESTMAX SOFT XL"
CARTUCCIA FILTRANTE / FILTERING CARTRIDGE
6800 Lt - (971Kg/coffee)
MISURE / SIZE
H.500mm-Ø145mm
MISURE CON TESTA / SIZE WITH HEAD
H.530mm-Ø145mm

800159

"BWT BESTMAX SOFT 2XL"
CARTUCCIA FILTRANTE / FILTERING CARTRIDGE
12000 Lt - (1714Kg/coffee)
MISURE / SIZE
H.574mm-Ø185mm
MISURE CON TESTA / SIZE WITH HEAD
H.600mm-Ø185mm

800188

"BWT BESTMIN PREMIUM M"
CARTUCCIA FILTRANTE / FILTERING CARTRIDGE
10000 Lt
MISURE / SIZE
H.475mm-Ø130mm
MISURE CON TESTA / SIZE WITH HEAD
H.500mm-Ø130mm

800192

"BWT BESTMIN COFFEE 100"
CARTUCCIA FILTRANTE / FILTERING CARTRIDGE
10000 Lt
MISURE / SIZE
H.475mm-Ø130mm
MISURE CON TESTA / SIZE WITH HEAD
H.500mm-Ø130mm

800160

"BWT BESTPROTECT S"
CARTUCCIA FILTRANTE / FILTERING CARTRIDGE
440 Lt
MISURE / SIZE
H.360mm-Ø88mm
MISURE CON TESTA / SIZE WITH HEAD
H.385mm-Ø88mm

800184

"BWT BESTPROTECT V"
CARTUCCIA FILTRANTE / FILTERING CARTRIDGE
1070 Lt - (150Kg/coffee)
MISURE / SIZE
H.420mm-Ø110mm
MISURE CON TESTA / SIZE WITH HEAD
H.445mm-Ø110mm

800185

"BWT BESTPROTECT XL"
CARTUCCIA FILTRANTE / FILTERING CARTRIDGE
2245 Lt - (321Kg/caffè)
MISURE / SIZE
H.502mm-Ø147mm
MISURE CON TESTA / SIZE WITH HEAD
H.527mm-Ø147mm

800166

"BWT BESTPROTECT 2XL"
CARTUCCIA FILTRANTE / FILTERING CARTRIDGE
4285 Lt - (612Kg/coffee)
MISURE / SIZE
H.580mm-Ø185mm
MISURE CON TESTA / SIZE WITH HEAD
H.600mm-Ø185mm

TRATTAMENTO ACQUA Tav.07

BWT

800178

"BWT BESTHEAD ST"
TESTA CARTUCCIA
FILTRANTE
3/8M - 3/8M
FILTERING
CARTRIDGE HEAD
3/8M - 3/8M

800193

"BWT BESTHEAD FLEX"
TESTA CARTUCCIA
FILTRANTE NUOVO TIPO
3/8M 90° - 3/8M 90°
FILTERING CARTRIDGE
HEAD NEW TIPE
3/8M 90° - 3/8M 90°

800167

"BWT BESTMAX V"
CARTUCCIA FILTRANTE / FILTERING CARTRIDGE
2500 Lt - (357Kg/caffè)
MISURE / SIZE
H.420mm-Ø115mm
MISURE CON TESTA / SIZE WITH HEAD
H.445mm-Ø115mm

800170

"BWT BESTMAX M"
CARTUCCIA FILTRANTE / FILTERING CARTRIDGE
3800 Lt - (543Kg/coffee)
MISURE / SIZE
H.475mm-Ø130mm
MISURE CON TESTA / SIZE WITH HEAD
H.500mm-Ø130mm

800171

"BWT BESTMAX L"
CARTUCCIA FILTRANTE / FILTERING CARTRIDGE
5200 Lt - (743Kg/caffè)
MISURE / SIZE
H.500mm-Ø145mm
MISURE CON TESTA / SIZE WITH HEAD
H.530mm-Ø145mm

800172

"BWT BESTMAX XL"
CARTUCCIA FILTRANTE / FILTERING CARTRIDGE
6800 Lt - (971Kg/caffè)
MISURE / SIZE
H.500mm-Ø145mm
MISURE CON TESTA / SIZE WITH HEAD
H.530mm-Ø145mm

800173

"BWT BESTMAX 2XL"
CARTUCCIA FILTRANTE / FILTERING CARTRIDGE
12000 Lt - (1714Kg/caffè)
MISURE / SIZE
H.574mm-Ø185mm
MISURE CON TESTA / SIZE WITH HEAD
H.600mm-Ø185mm

800174

"BWT BESTMAX PREMIUM M"
CARTUCCIA FILTRANTE / FILTERING CARTRIDGE
1750/2100 Lt - (250Kg/caffè)
MISURE / SIZE
H.475mm-Ø130mm
MISURE CON TESTA / SIZE WITH HEAD
H.500mm-Ø130mm

800175

"BWT BESTMAX PREMIUM XL"
CARTUCCIA FILTRANTE / FILTERING CARTRIDGE
2785/3340 Lt - (398Kg/coffee)
MISURE / SIZE
H.502mm-Ø147mm
MISURE CON TESTA / SIZE WITH HEAD
H.527mm-Ø147mm

800176

"BWT BESTMAX PREMIUM 2XL"
CARTUCCIA FILTRANTE / FILTERING CARTRIDGE
4535/5440 Lt - (648Kg/caffè)
MISURE / SIZE
H.580mm-Ø185mm
MISURE CON TESTA / SIZE WITH HEAD
H.600mm-Ø185mm

800196

"BWT BESTMAX SMART 25"
CARTUCCIA FILTRANTE / FILTERING CARTRIDGE
3800 Lt - (648Kg/caffè)
MISURE / SIZE
H.383mm-Ø110mm
MISURE CON TESTA / SIZE WITH HEAD
H.448mm-Ø110mm

800191

"BWT BESTMAX SMART 30"
CARTUCCIA FILTRANTE / FILTERING CARTRIDGE
5800 Lt - (829Kg/caffè)
MISURE / SIZE
H.475mm-Ø130mm
MISURE CON TESTA / SIZE WITH HEAD
H.500mm-Ø130mm

BWT

800186

"BWT BESTTASTE X"
CARTUCCIA FILTRANTE / FILTERING CARTRIDGE
10000 Lt
MISURE / SIZE
H.280mm-Ø88mm
MISURE CON TESTA / SIZE WITH HEAD
H.300mm-Ø88mm

800187

"BWT BESTTASTE S"
CARTUCCIA FILTRANTE / FILTERING CARTRIDGE
40000 Lt
MISURE / SIZE
H.360mm-Ø88mm
MISURE CON TESTA / SIZE WITH HEAD
H.385mm-Ø88mm

800169

"BWT BESTCARE MINI"
CARTUCCIA FILTRANTE / FILTERING CARTRIDGE
5000 Lt
MISURE / SIZE
H.175mm-Ø60mm

800165

"BWT BESTCLEAR 2XL"
CARTUCCIA FILTRANTE / FILTERING CARTRIDGE
8270 Lt
MISURE / SIZE
H.580mm-Ø185mm
MISURE CON TESTA / SIZE WITH HEAD
H.600mm-Ø185mm

800183

"BWT BESTDRINK V"
CARTUCCIA FILTRANTE / FILTERING CARTRIDGE
3560 Lt
MISURE / SIZE
H.420mm-Ø115mm
MISURE CON TESTA / SIZE WITH HEAD
H.445mm-Ø115mm

800161

"BWT BESTCUP PREMIUM T"
50lt

800162

"BWT BESTCUP PREMIUM S"
50lt

800163

"BWT BESTCUP PREMIUM M"
100lt

800164

"BWT BESTCUP PREMIUM L"
200lt

800179

CONTALITRI "3/8"
CON DISPLAY LCD
DIGITAL LITER
COUNTER "3/8"
WITH LCD DISPLAY

800195

KIT ANALISI DUREZZA
ACQUA
WATHER HARDNESS
TEST KIT

800157

FILTRO DECALCIFICANTE
DESCALING FILTER
"BWT BESTAROMA PREMIUM"
H56,5mm - Ø89,6mm - 145L

800177

BESTFLUSH
VALVOLA TRE VIE
THREE WAY VALVE

TRATTAMENTO ACQUA Tav. 09

RICAMBI ADDOLCITORI

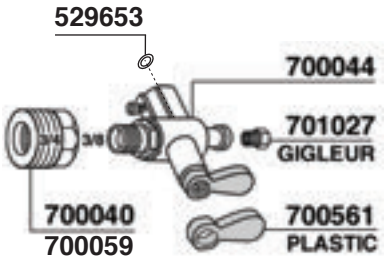

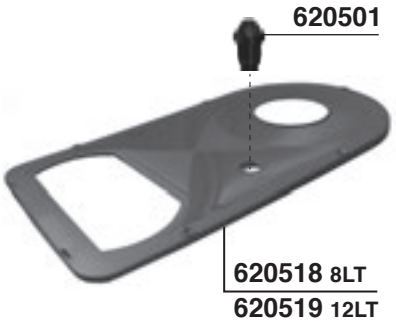

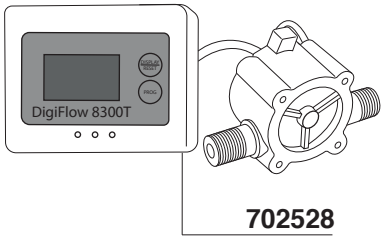

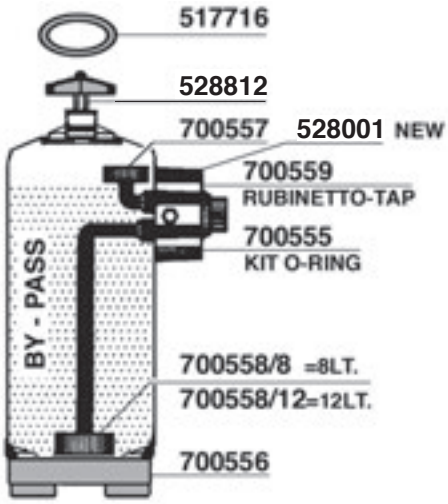

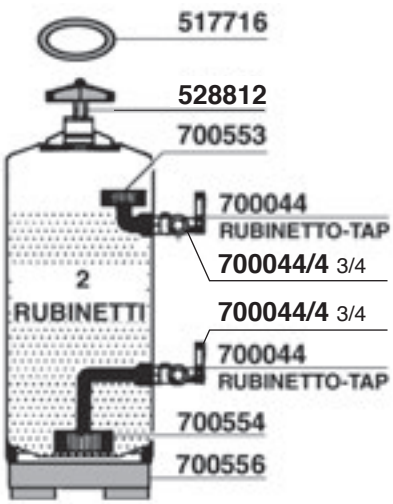

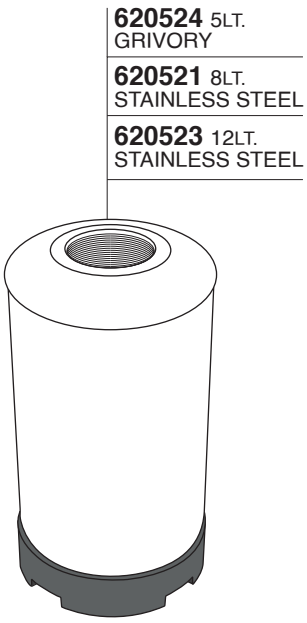

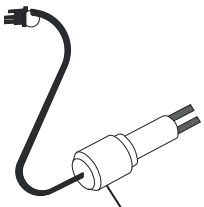

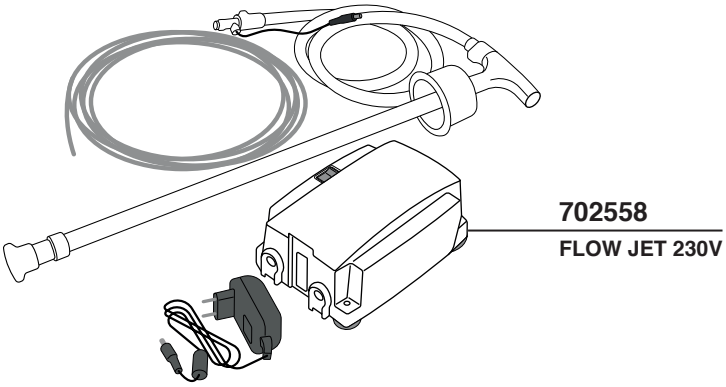

TRATTAMENTO ACQUA Tav. 10

RICAMBI ADDOLCITORI

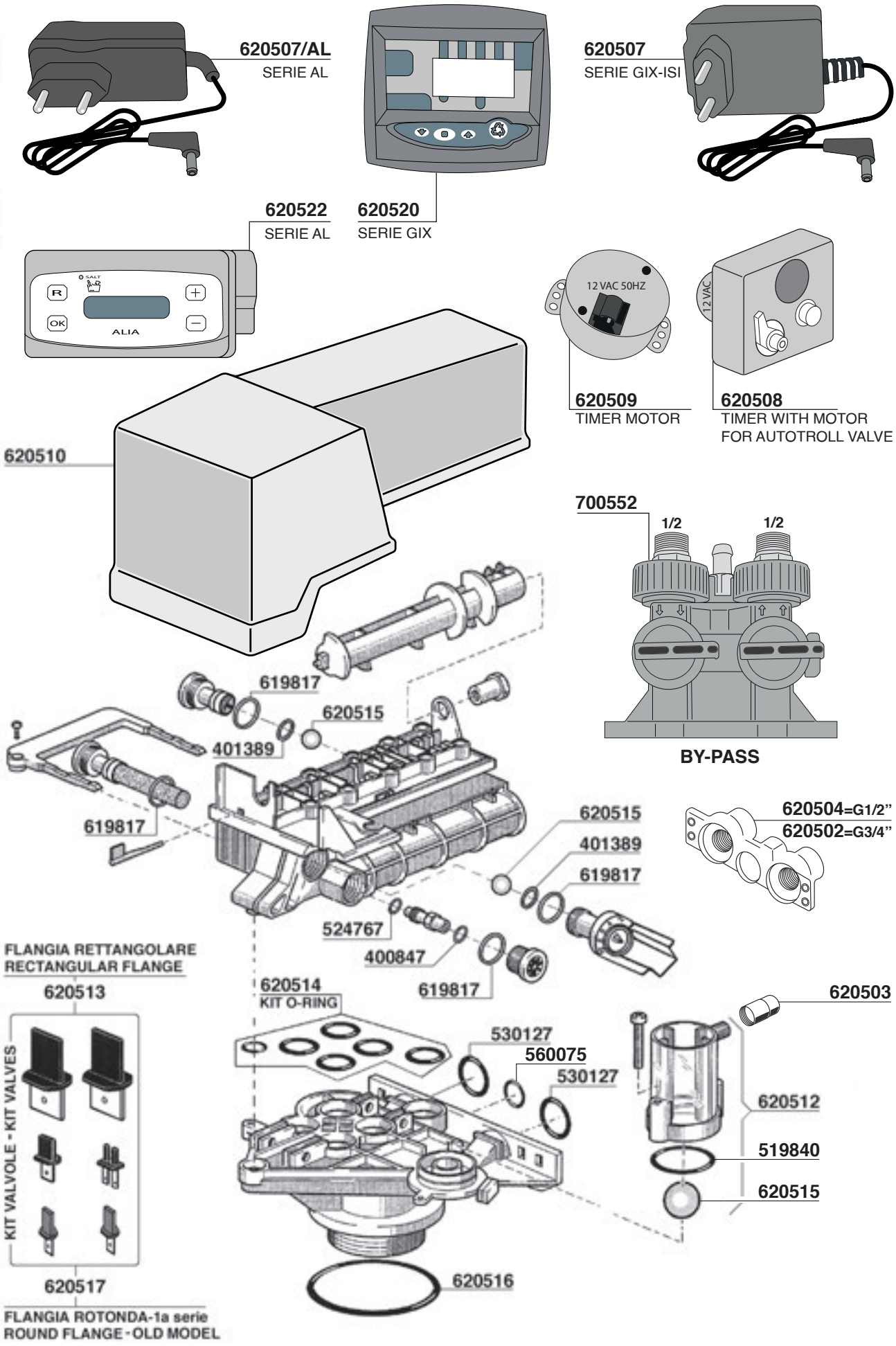

RICAMBI UNIVERSALI Tav.01

ARTICOLI MANUTENZIONE

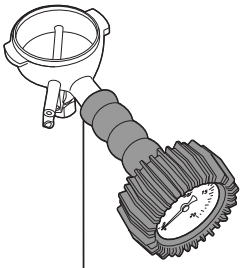

PORTAFILTRO CON MANOMETRO
PORTASONDA TERMOMETRO - RUBINETTO SCARICO ACQUA
PORTAFILTER WITH MANOMETER -TERMOMETER CONNECTION WATER DRAIN VALVE

620913 BRASILIA GRUPPO E61, BRUGNETTI, EXPOBAR, FIAMMA RST FAEMA, FUTURMAT
620913/A ASTORIA, BEZZERA, BRASILIA GRUPPO BE, FIORENZATO CS PIAZZA SAN MARCO
620913/AP ASTORIA P4Y, WEGA CONCEPT 52
620913/C CIMBALI
620913/CA CARIMALI
620913/DC (15° INCLINATO/INCLINED) DALLA CORTE
620913/G GAGGIA, SAECO ROMA
620913/NS SIMONELLI, VICTORIA ARDUINO
620913/P LA PAVONI
620913/R CIME, ECM DE, ELEKTRA, MAGISTER, PROFITEC, PROMAC, RANCILIO, ROCKET
620913/SM LA SAN MARCO, GRUPPO IZZO
620913/SP LA SPAZIALE
620913/V BRUGNETTI, BFC, CIME, ECM, EXPOBAR, FIAMMA RST, FIORENZATO CS, GRIMAC, ISOMAC, LA PAVONI, SAB ITALIA, SANREMO, VBM, WEGA

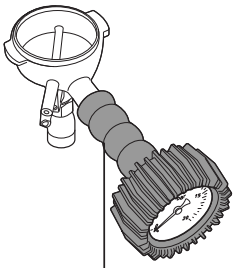

PORTAFILTRO CON MANOMETRO
PORTASONDA TERMOMETRO - RUBINETTO SCARICO ACQUA
PORTAFILTER WITH MANOMETER -TERMOMETER CONNECTION WATER DRAIN VALVE

620900 BRASILIA GRUPPO B61, BRUGNETTI, EXPOBAR, FIAMMA RST, FAEMA, FUTURMAT
620900/A (15° INCLINATO/INCLINED) ASTORIA, BEZZERA, BRASILIA GRUPPO BE, FIORENZATO CS PIAZZA SAN MARCO
620900/AP ASTORIA P4Y, WEGA CONCEPT 52
620900/C CIMBALI
620900/CA CARIMAL
620900/DC (15° INCLINATO/INCLINED) DALLA CORTE
620900/G GAGGIA, SAECO AROMA
620900/NS SIMONELLI, VICTORIA ARDUINO
620900/R CIME, ECM DE, ELEKTRA, MAGISTER, PROFITEC, PROMAC, RANCILIO, ROCKET
620900/SM LA SAN MARCO , GRUPPO IZZO
620900/SP LA SPAZIALE
620900/V BRUGNETTI, BFC, CIME, ECM, EXPOBAR, FIAMMA RST, FIORENZATO CS, GRIMAC, ISOMAC, LA PAVONI, SAB ITALIA, SANREMO, VBM, WEGA

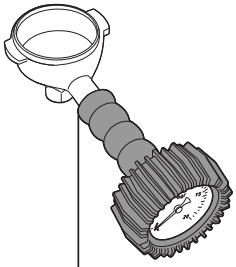

PORTAFILTRO CON MANOMETRO
PORTAFILTER WITH MANOMETER

700113 BRASILIA GRUPPO B61, BRUGNETTI, EXPOBAR, FIAMMA RST FAEMA, FUTURMAT
700113/A ASTORIA, BEZZERA, BRASILIA GRUPPO BE, FIORENZATO CS PIAZZA SAN MARCO
700113/AP ASTORIA P4Y, WEGA CONCEPT 52
700113/C CIMBALI
700113/CA CARIMAL
700113/G GAGGIA, SAECO AROMA
700113/NS SIMONELLI, VICTORIA ARDUINO
700113/P LA PAVONI
700113/SM LA SAN MARCO, GRUPPO IZZO
700113/SP LA SPAZIALE
700113/V BRUGNETTI, BFC, CIME, ECM, EXPOBAR, FIAMMA RST, FIORENZATO CS, GRIMAC, ISOMAC, LA PAVONI, SAB ITALIA, SANREMO, VBM, WEGA

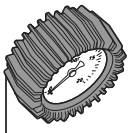

MANOMETRO/*MANOMETER*

700148/Z

ARTICOLI MANUTENZIONE

591675
6 gr

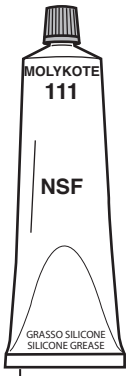

591659
100 gr

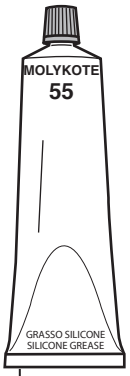

591660
100 gr

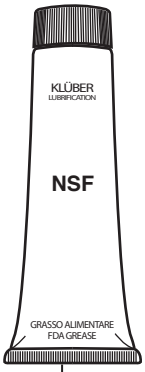

591676
45 gr

591672
25 gr

PASTA
TERMOCONDUTTRICE
PASTE
TERMOCONDUCTOR

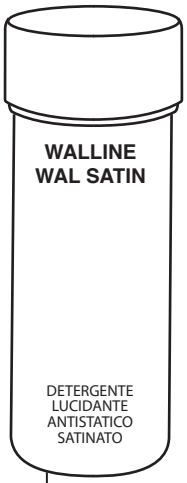

591197

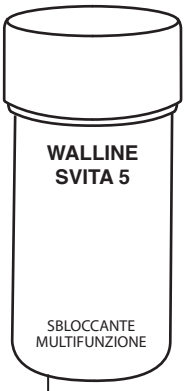

591199

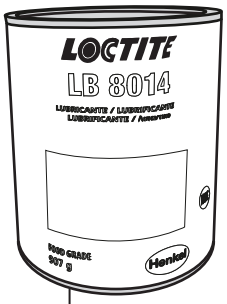

591658
907 gr

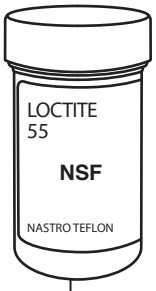

591671

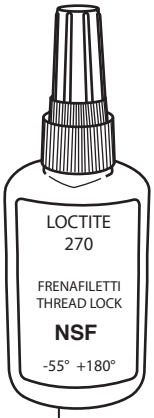

591673 50 ml

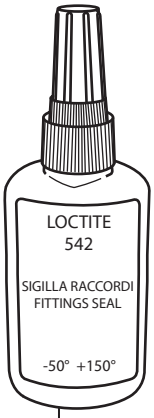

591674 50 ml

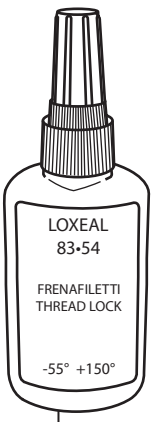

591667 50 ml

591669 50 ml

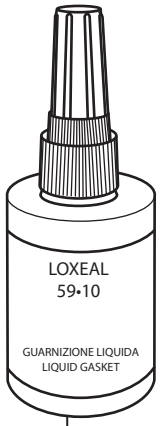

591670 75 ml

701086
Levafiltro acciaio inox
Stainless Steel filter lever

Metallurgica Motta
620815
Chiave universale per barista
Universal barista key

Pallo
701082
Chiave multiuso
Multi-function wrench

701088
Utensile smonta doccia per vite a taglio
Shower disassembling tool for slot crew
compatibilità/*compatibility:*
Astoria, Aurora Brugnetti, Bezzera, BFC, Brasilia , Carimali, Casadio, Expobar, Faema,
Fiamma RST, Gaggia, La Marzocco, La San Marco, Nuova Simonelli, La Pavoni, Promac, Rancilio, Sanremo, Victoria Arduino, Wega, Sv Italia, Fiorenzato, Cime

Joe Frex
701089
Spazzolino a vapore per pulizia doccia
Cleaning steam brush for shower

Filtro cieco
Blind filter
521901 Standard Ø58mm
700487 La San Marco Ø53mm
703535 La Spaziale Ø53mm

Demtruck
701092
Carrello per macchine espresso Demtruck 2.0 heavy duty - deluxe kit
Trolley for espresso machines espresso Demtruck 2.0 heavy duty - deluxe kit

701087
Utensile smonta doccia per dado esagonale
Shower disassembling tool for hexagonal nut
compatibilità/*compatibility:*
Conti, Spaziale, Dalla Corte

701008
Cacciavite nano a taglio per sostituzione doccia erogazione
Flat pocket screwdreiver for shower head replacement

701007
Punteruolo per rimozione sottocoppa
Bodkin for gasket removal

Joe Frex
701091
Spazzolino di ricambio per **701089**
Spare brush for **701089**

700613 Ø50mm
Filtro cieco in gomma per pulizia gruppo
Rubber blind filter for group cleaning

BECCUCCI

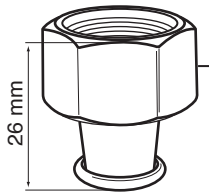

502003 3/8

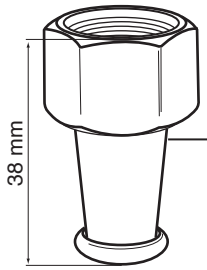

615599 3/8

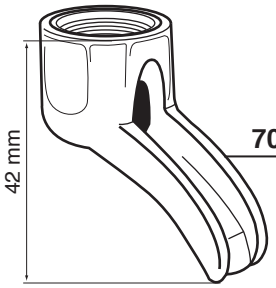

700024 3/8

300202 3/8

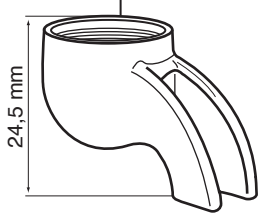

511673 3/8

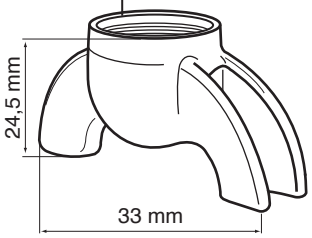

511675 3/8

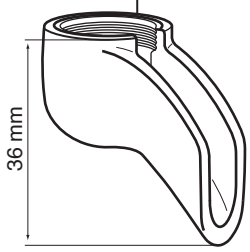

511674 3/8

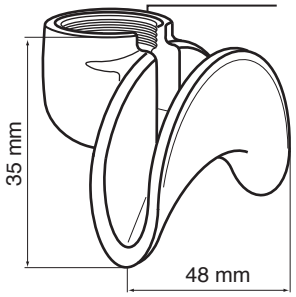

511672 3/8

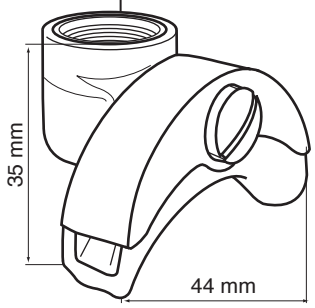

591733 3/8

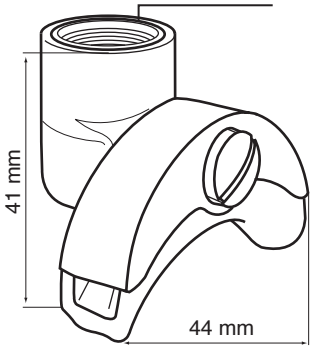

630086 M16
630086/8 3/8

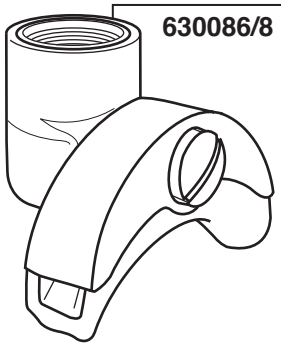

515073

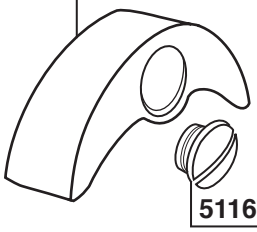

511678

511672/R 3/8

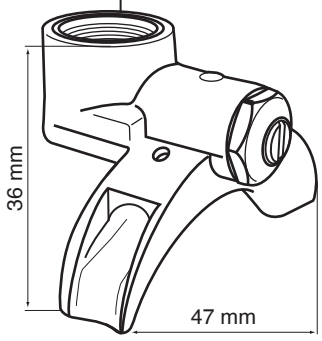

FLUSSO REGOLABILE
ADJUSTABLE FLOW

618522 3/8
3 VIE - 3 WAYS

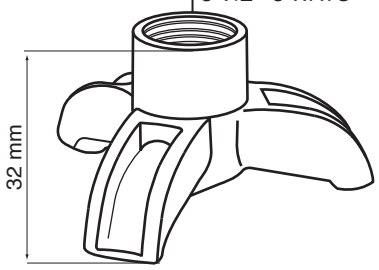

630085 M16
630085/8 3/8

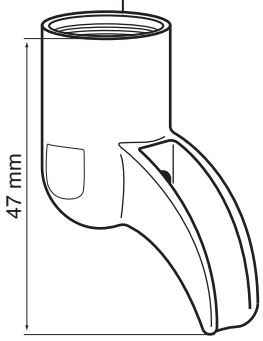

511676 3/8
INOX

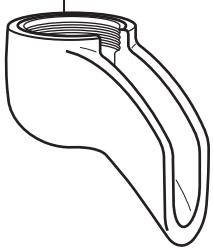

511677 3/8
INOX

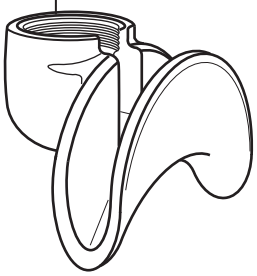

630087 M16
630087/8 3/8

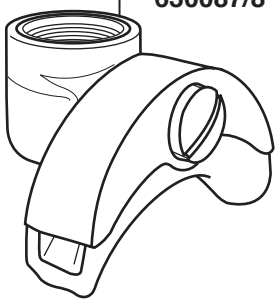

515074

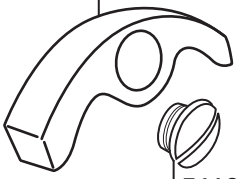

511678

700789 3/8

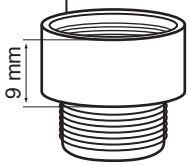

RICAMBI UNIVERSALI

Tav.06

DETERGENTI PER MACCHINE DA CAFFE'

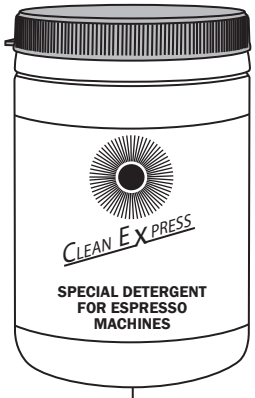

700019
900 gr

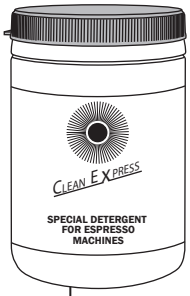

591182
60 TABLETS
2,5 gr each

591186
100 TABLETS
1 gr each

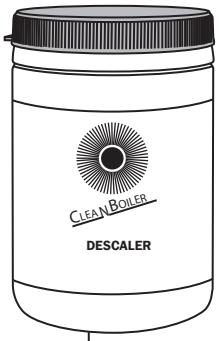

700020
1000 gr

591195
900 gr
591196
250 gr

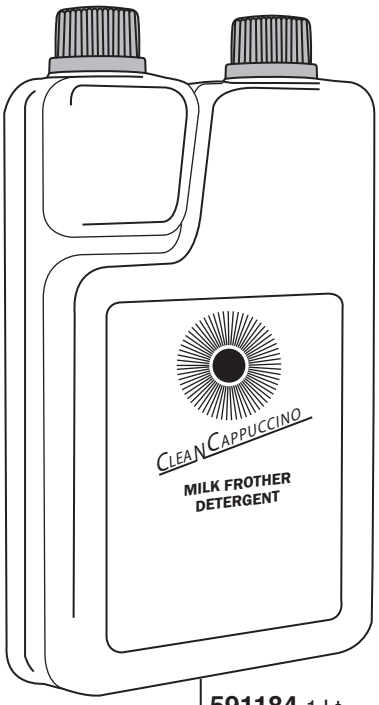

591184 1 Lt

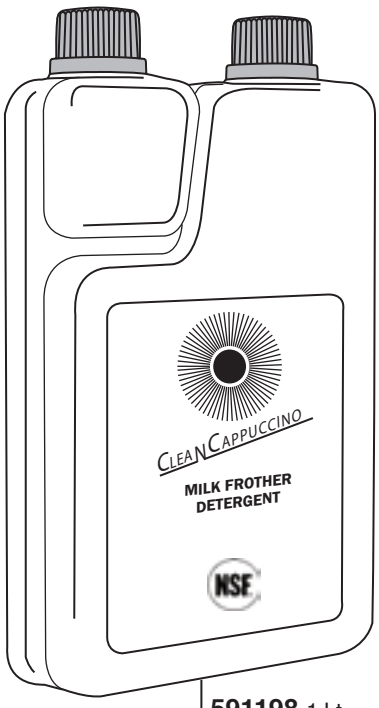

591198 1 Lt

591187 1 Lt

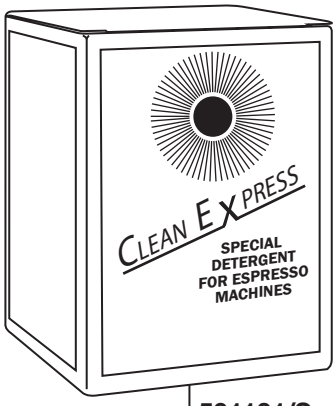

591181/S
15 SACHETS

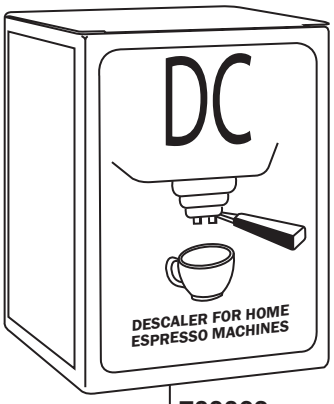

700063
12 SACHETS

DETERGENTI PER MACCHINE DA CAFFE'

591194 10 sachets
PULY GRIND CRYSTALS

591227 405g
PULY GRIND
GRINDER CLEANER

591205
KIT PULY CAFF NSF

591208 900gr.
PULY CAFF NSF

591209 570gr.
PULY CAFF NSF

591210 370gr.
PULY CAFF NSF

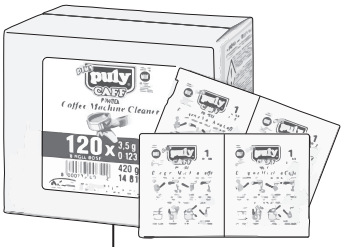

591211 120 sachets
PULY CAFF NSF

591212 510gr.
PULY CAFF GREEN

591224 1000gr.
PULY CAFF GREEN

591213
60 tablets 2,5 gr. each
PULY CAFF NSF

591214
100 tablets 1,35 gr.
PULY CAFF NSF

591215
100 tables 1 gr.
PULY CAFF NSF

591216
70 tables 0,5 gr.
PULY CAFF NSF

591222
120 tables 4 gr.
PULY CAFFBREW NSF

RICAMBI UNIVERSALI

DETERGENTI PER MACCHINE DA CAFFE'

591206 1 Lt.
PULY BAR IGIENIC

591217 200 ml.
PULY GRIND HOPPER

591218 1 Lt.
PULY MILK PLUS NSF

591220 1 Lt.
PULY MILK GREEN

591219 4 doses x 25 ml.
PULY MILK PLUS NSF

591226 14 doses x 25 ml.
PULY MILK PLUS NSF

591221 2 doses x 125 ml.
PULY DESCALER

591223 1000 ml.
PULY CAFF COLD-BREW

591225 1000 ml.
PULY MILK CAPUCINO

RICAMBI UNIVERSALI Tav.09

DETERGENTI

591188 6 kg
CON CLORO - WITH CHLORINE

591189 12 kg
CON CLORO - WITH CHLORINE

591192
SENZA CLORO - WITHOUT CHLORINE

591190 5 kg

591191 10 kg

591193 6 kg

N140 10 L.
CON CLORO - WITH CHLORINE

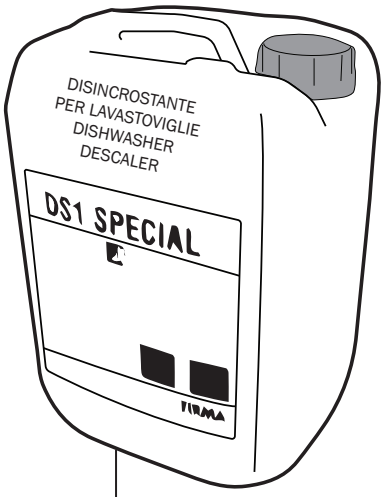

N141 10 L.

N131 0,75 L.

591176 6 L.

N143 1kg

620052
24 SACHETS

RICAMBI UNIVERSALI Tav. 10

ELETTROVALVOLE LUCIFER/PARKER

Ø 1,5

700301/11 V110/50/60
700301/22 V220/240/50/60
700301/24 V24/50/60

Ø 1,5

619276 V24 CC

Ø 2,5

632012/11 V110/50/60
632012/22 V220/50/60
632012/24 V24/50/60

Ø 1,5

700175 V220/50/60
700175/11 V110
700175/24 V24/50/60

Ø 2,5 1/8F-1/8F

700668 V220/50/60
700668/11 V110/50/60
700668/24 V24/50/60

Ø 2,5

700174 V220/50/60
700174/11 V110
700174/24 V24

ADJUSTABLE Ø 1,5 1/8F-1/8F

616580 V220/50/60
616580/11 V110

700181/11 V110/50/60
700181/22 V220/50/60
700181/24 V24/50/60

619275 V24 DC

632000
KIT COIL BLOCK

Ø 2,5 1/8F-1/8F
700670

Ø 1,5
700176

Ø 2,5
632013

S.S. Ø 1,5
700173

S.S. Ø 2,5
632016

700173/K
LIQUIPURE GASKETS KIT

1/8G H3mm
551268

RICAMBI UNIVERSALI Tav. 11

ELETTROVALVOLE ODE

Ø 1,5
300304 V220/50/60
300304/11 V110/50/60
300304/24 V24 DC

Ø 1,5 1/8F-1/8F
300110 V220/230/50/60
300065/11 V110/50/60

Ø 1,5 1/8F-1/8F
300113 V230/240/50/60

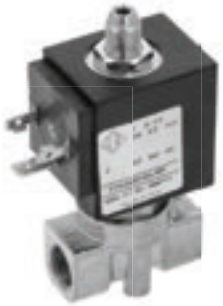

Ø 4,5 1/4F-1/4F
300120 V230/240/50/60

Ø 5,5 1/4F-1/4F
300119 V220/230/50/60

PPS
300122 V220/50/60
300123 V24/50/60

Ø 2,5
300112 V230/240/50/60

Ø 2,5 1/4F-1/4F
300116 V230/240/50/60

Ø 2,5
300117 V220/230/50/60

Ø 2,5 1/8F-1/8F
300118 V220/230/50/60

Ø 2
300111 V220/230/50/60

ADJUSTABLE Ø 2,5 1/8F-1/8F
560066 V220/230/50/60
560066/11 V110

Ø 2,5
300121 V230/50/60

PPS
300114 V24/50/60

300115 V220/230/50/60

300235 V220/230/50/60
300235/11 V110

300140 V220/230/50/60

300015 V220/230/50/60
300015/11 V110/50/60
300015/24 V24 DC

300305

300073

RICAMBI UNIVERSALI Tav. 12

ELETTROVALVOLE PARKER

Ø 1,5

700152/22 V220/230/50/60
700152/11 V110/50/60

Ø 1,5

700153/22 V220/230/50/60
700153/11 V110/60
700270 V24/50/60

Ø 1,5

576288/22 V220/230/50/60
576288/11 V115/50/60

Ø 2,5 1/4F-1/4F

632018/22 V220/50/60
632018/11 V110/50/60
632018/24 V24/50/60

Ø 2,5 1/4F-1/4F

632017/22 V220/230/50/60
632017/11 V110/50/60
632017/24 V24/50/60
632015/24 V24 DC

Ø 2,5 1/8F-1/8F

700869/22 V220/230/50/60
700869/11 V110/50/60
700869/24 V24/50/60

Ø 2,5

634294/22 V220/230/50/60
634294/24 V24/50/60

Ø 2,5

601604 V220/50/60

Ø 1,5

424069 V220/230/50/60

700189/22 V220/50/60
700189/11 V110/50/60

700179/22 V220/50/60
700179/11 V110/120/50/60
700156 V24/50/60
591753 V24 DC

ELETTROVALVOLE PARKER

Ø 2,5 1/8F-1/8F
700872

Ø 2,5 1/4F-1/4F
700873

Ø 2,5 1/4F-1/4F
632019

Ø 1,5
700158

Ø 1,5
700177

Ø 2,5 1/8F-1/8F
632014

1/8G
700178

632000
KIT COIL BLOCK

1/8G H3mm
551268

ELETTROVALVOLE GHEZ

Ø 1,5
601513 V230/240/50/60

Ø 1,5 1/8F-1/8F
601511 V220/240/50/60

Ø 1,5 1/8F-1/8F
601512 V220/240/50/60

Ø 2
601516 V230/240/50/60

Ø 2,5 1/8F-1/8F
601514 V230/240/50/60

601517 V230/240/50/60

Ø1,5
601515

RICAMBI UNIVERSALI Tav. 14

EMERSON / SIRAI

Ø 1,5
616598 V220/50/60
616598/11 V110/50/60

Ø1,6
616594 V230/50

Ø 1,5
616581 V220/50-60

Ø1,6 1/8F-1/8F
616582 V230/50-60

Ø 1,6 1/8F-1/8F
616602/11 V120-110/50-60
616602/22 V230/50
616602/24 V230/50

Ø 3,2 1/4F-1/4F
616583 V220/50-60

616603/11 V120-110/50-60
616603/22 V220/50-60
616603/24 V24/50-60

AUTOMATION ENGINEERING

Ø 1,5
401984 V220/50

Ø 2,5 1/8F-1/8F
601602 V230/50

Ø 1,1 1/8F-1/8F
601603 V240-220/50

CEME

1/8F-1/8F
620659 V230/50

OLAB

Ø 10
401895 V220/50
401896 V120/60

M&M

Ø 10
700648/22 V220/50-60
700648/24 V24/50-60

CONNETTORI ELETTROVALVOLE

615977

615978

615978/P SMALL PLUG

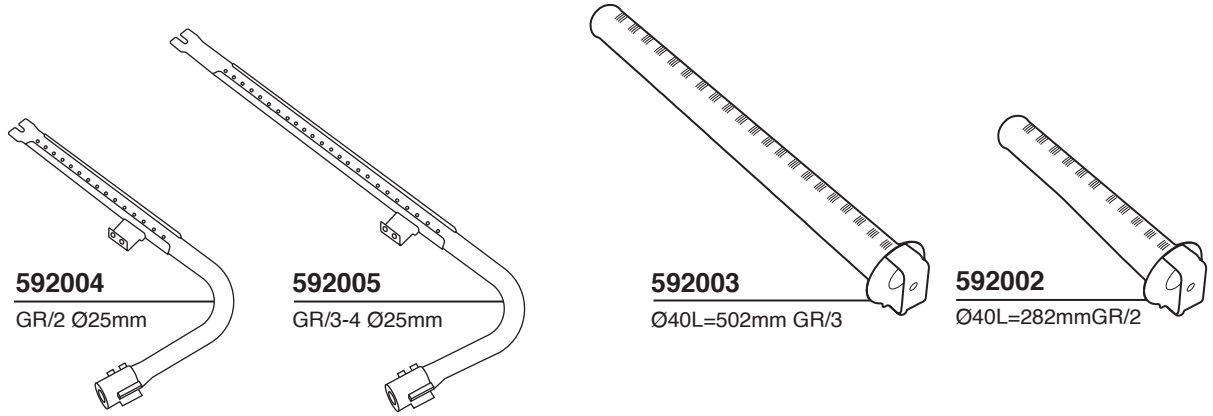

WEGA GAS KIT
F72GAS/2N 2 GRUPPI/GROUPS
F72GAS/3N 3 GRUPPI/GROUPS

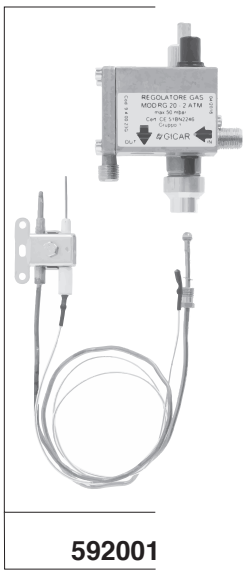

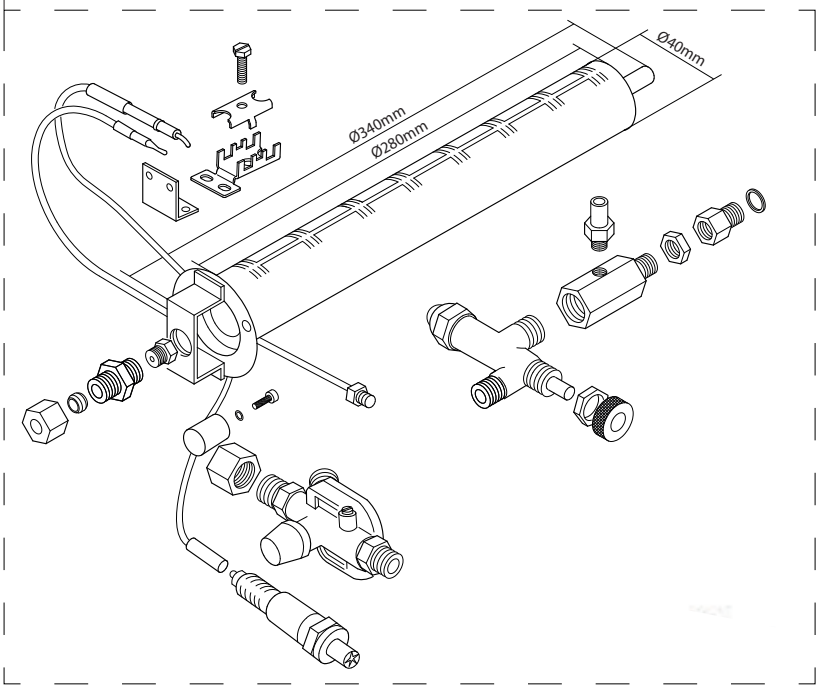

GAS KIT
592000 = DX/RH
592000/S = SX/LH

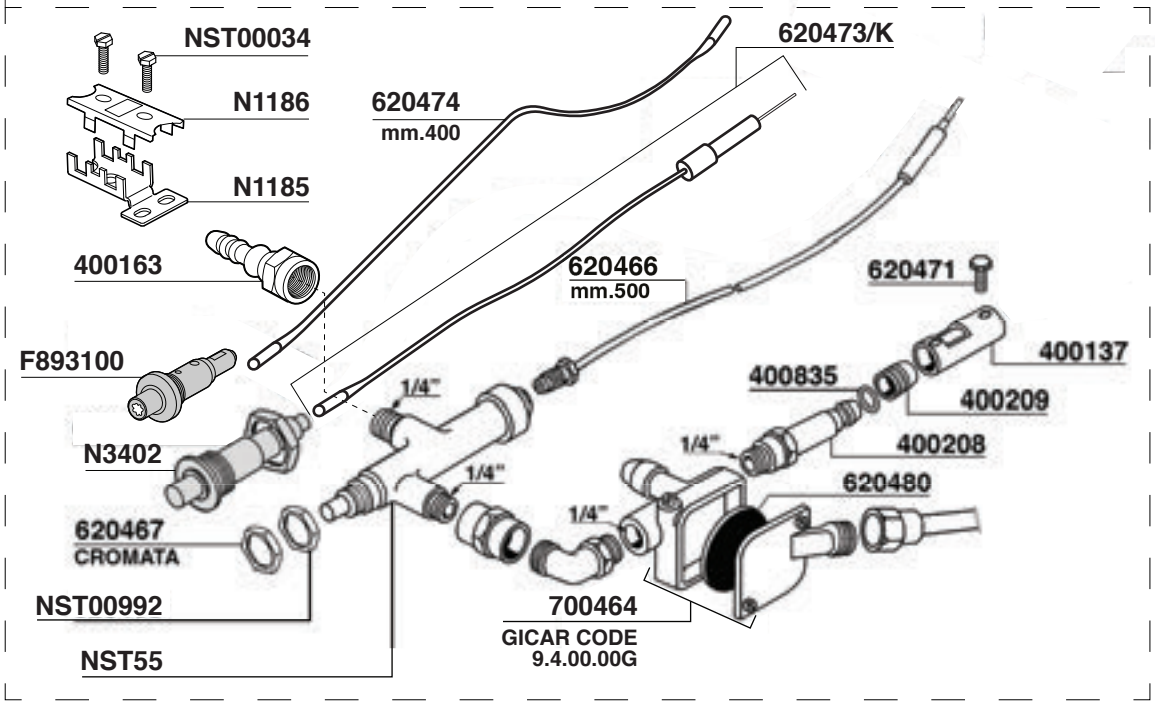

RICAMBI UNIVERSALI Tav. 16

GRUPPI COMPLETI

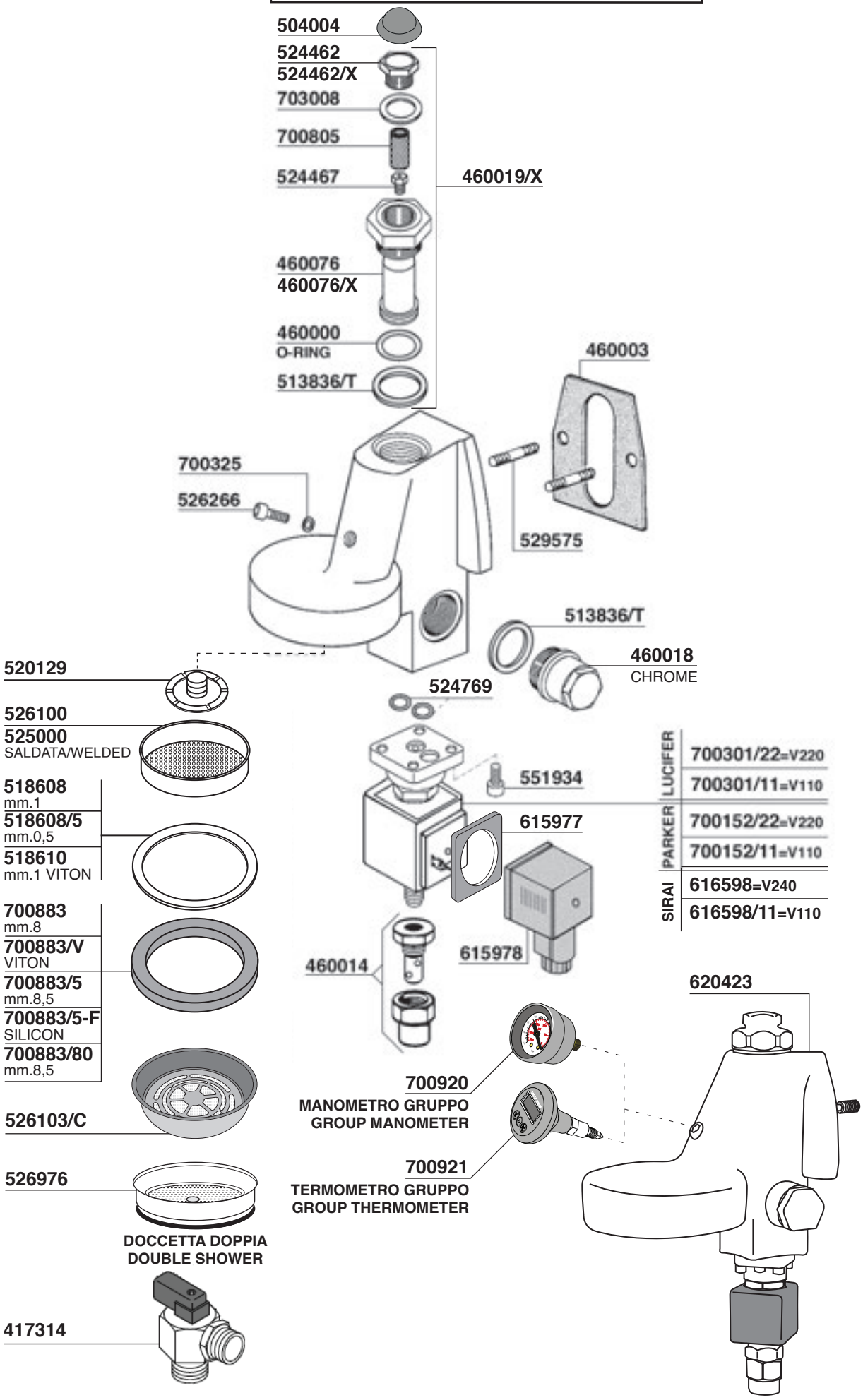

GRUPPI COMPLETI

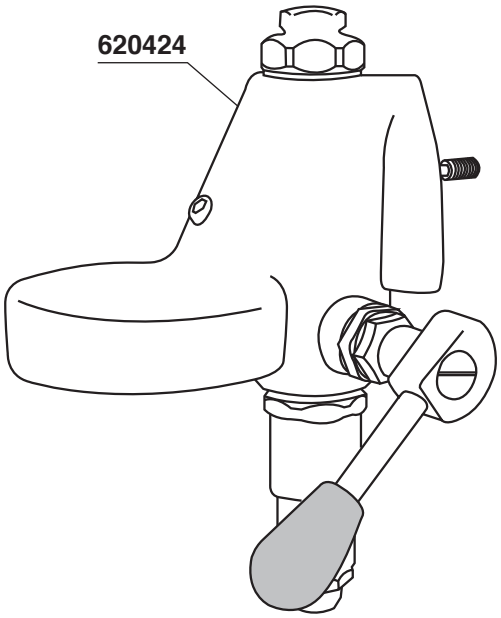

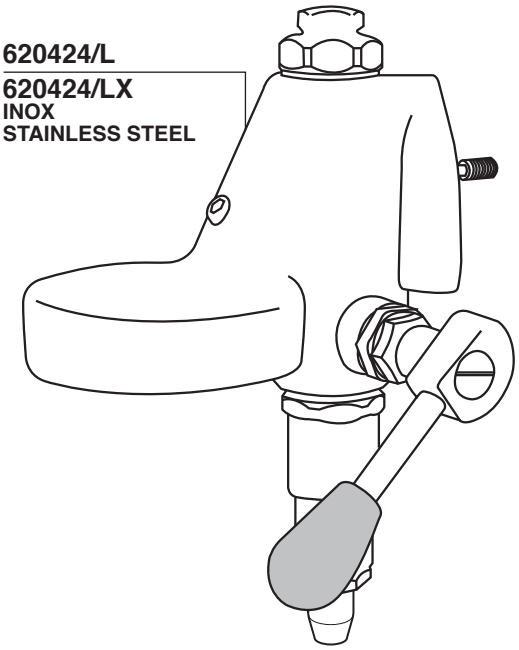

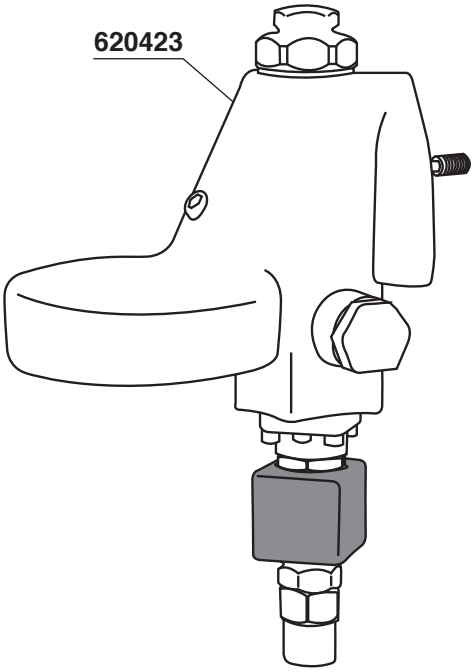

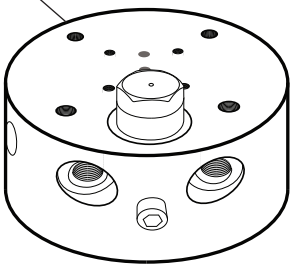

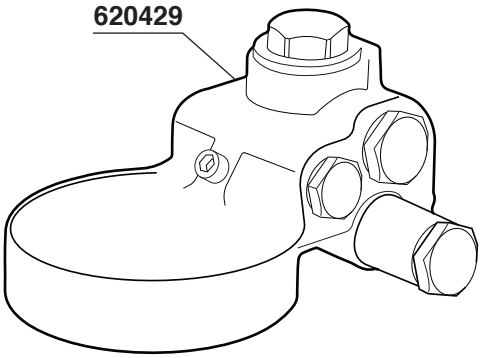

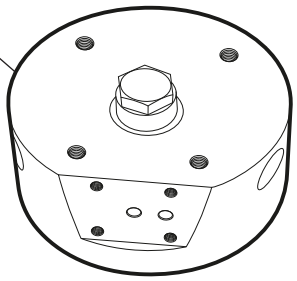

RICAMBI UNIVERSALI Tav.18

GRUPPI COMPLETI

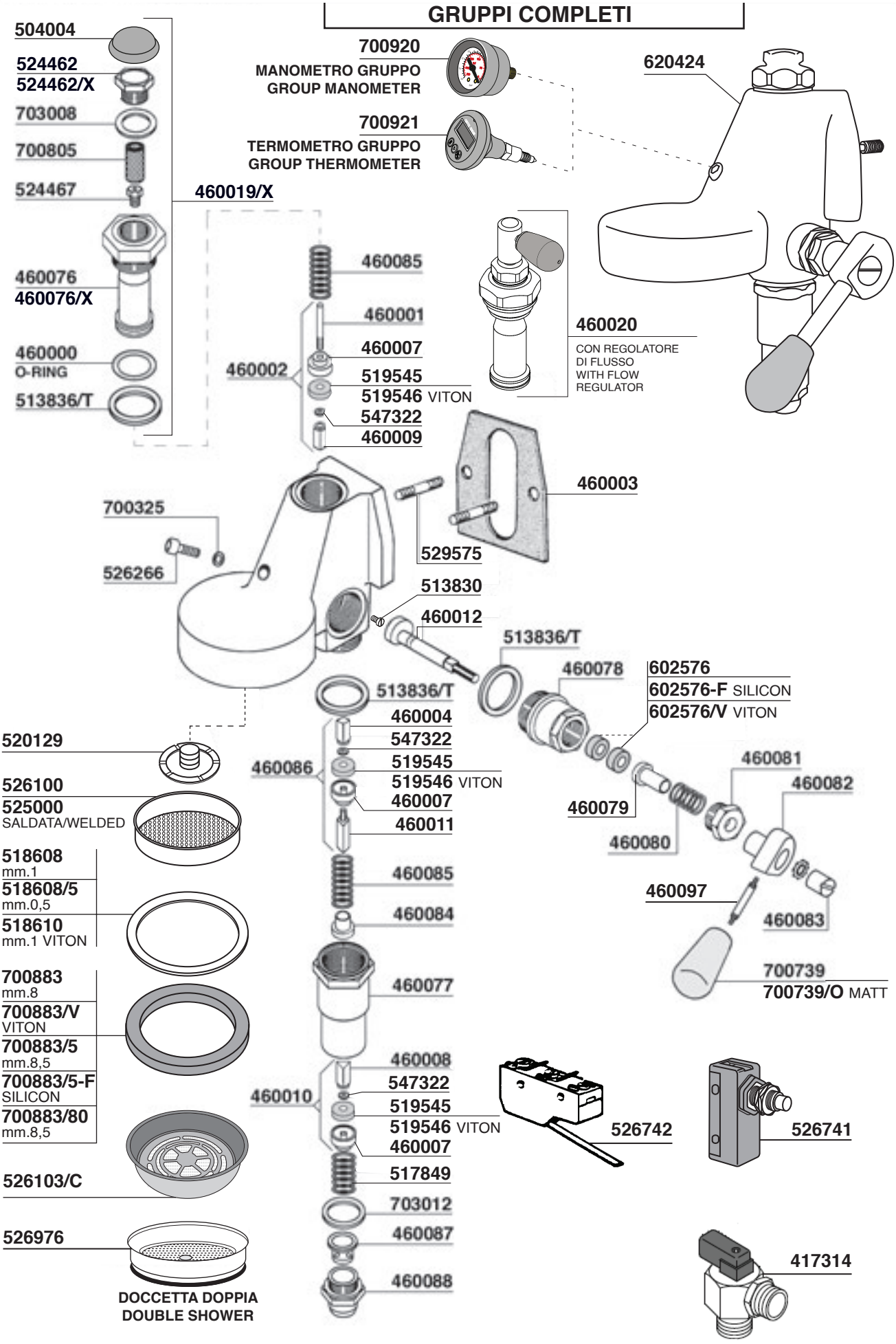

RICAMBI UNIVERSALI

Tav.20

ELETTRONICA

MOTOR CABLE CONNECTION

620745

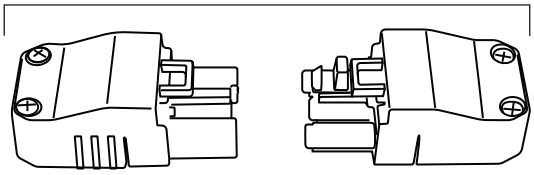

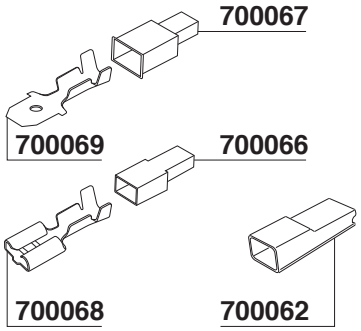

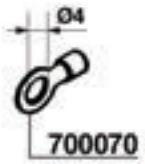

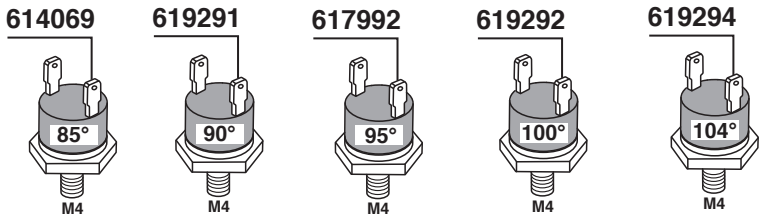

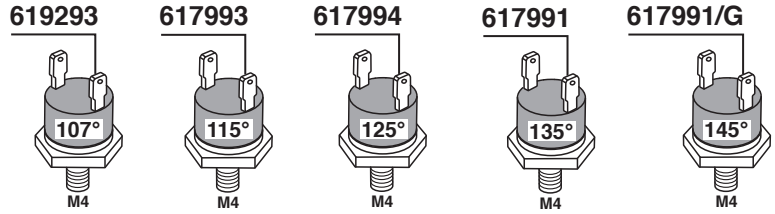

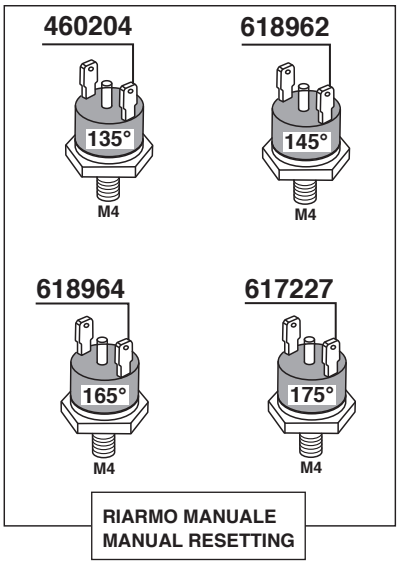

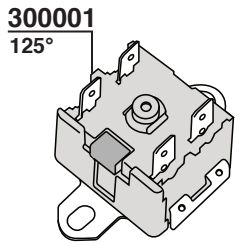

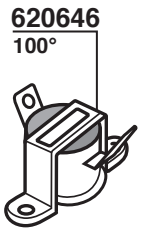

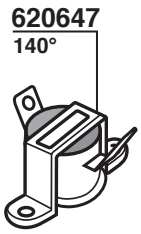

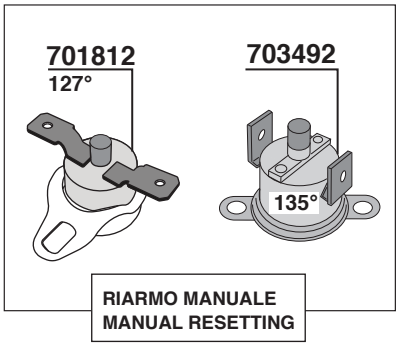

CAVO VETRO SILICONE
GLASS SYLICON HOSE

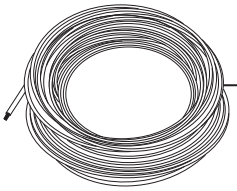

620750 1x4 mm

NASTRO ISOLANTE
ISOTAPE

620721 10 mt - Ø 8 mm

GUAINA ELASTOMERO ROSSA

CAVO UNIPOLARE ISOLATO GOMMA SILICONE
UNIPOLAR SILICON-RUBBER INSULATED CABLE

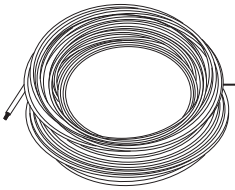

620717 1x2,5 mm MARRONE - BROWN
620718 1x2,5 mm GIALLO/VERDE - YELLOW/GREEN
620719 1x2,5 mm BLU - BLUE
620720 1x2,5 mm GRIGIO - GREY

CAVO FLESSIBILE NEOPRENE
CABLE FLEXIBLE NEOPRENE

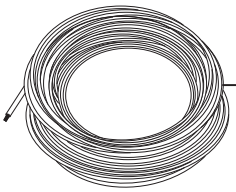

620722 3x2,5 mm
620723 4x2,5 mm
620746 5x2,5 mm

RICAMBI UNIVERSALI Tav.21

PARTI ELETTRONICHE

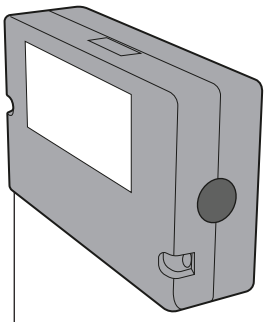

504007 230V
GICAR CODE 9.5.22.50G 00

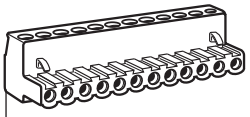

620709/4 4 PIN
620709/6 6 PIN
410453 7 PIN
620709/8 8 PIN
620709/10 10 PIN
620709 12 PIN
620709/13 13 PIN

620708
6 PIN 800 mm

620714
8 PIN 800 mm

620739
10 PIN 1100 mm

620706
16 PIN 600 mm
620707
16 PIN 800 mm

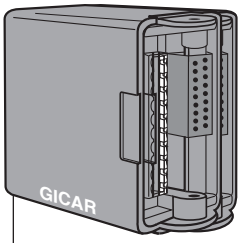

620740 GR1-230V
GICAR CODE 9.5.17.80G 06

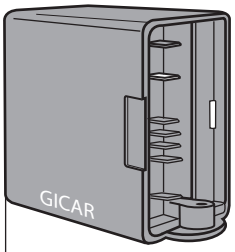

703382 230V
GICAR CODE 9.1.41.22G02

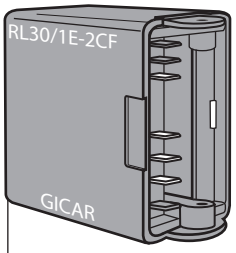

AUTOLIVELLO - AUTOFILL

700737/11 110V
GICAR CODE 9.1.40.70G

700737 220V
GICAR CODE 9.1.40.71G

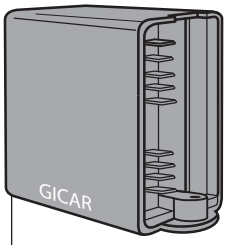

700663/11 115V
GICAR CODE 9.1.29.01G

700663 230V
GICAR CODE 9.1.29.00G

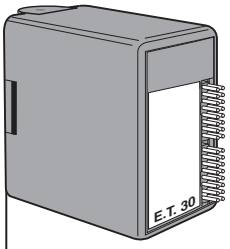

620701 GR1-2-230V
THE + AUTOLIVELLO
GICAR CODE 9.5.24.00G 00

620733 GR2-240V
GICAR CODE 9.5.24.20G

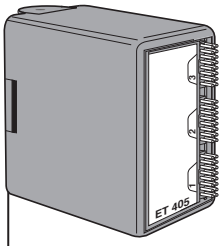

620700 GR1-2-3-230V/240V
THE + AUTOLIVELLO
GICAR CODE 9.5.23.16G 00

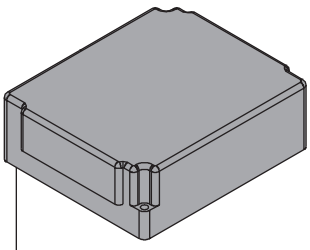

502109 GR1-2-3 230V/240V
GICAR CODE 9.5.22.69G 00

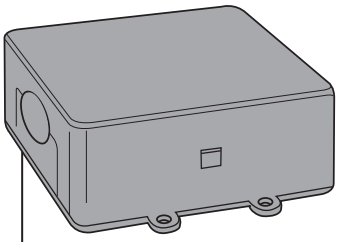

620732 GR1-2-3 230V
GICAR CODE 9.5.22.09G 01

504005 230V
GICAR CODE 9.5.22.50G 00

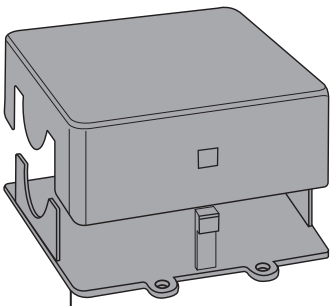

620747 SCATOLA/BOX
GICAR CODE 6.0.36.86

PARTI ELETTRONICHE

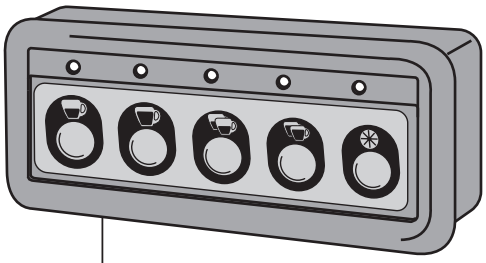

620736 16 PIN
GICAR CODE 9.9.08.83G

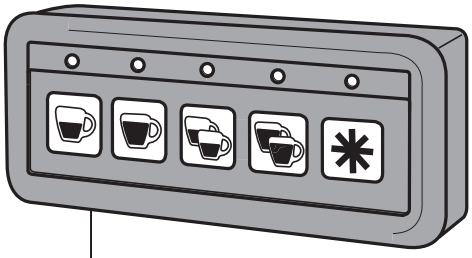

620704 16 PIN
GICAR CODE 9.9.09.50G

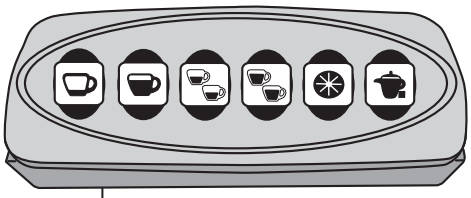

620734 16 PIN
GICAR CODE 9.9.07.41G

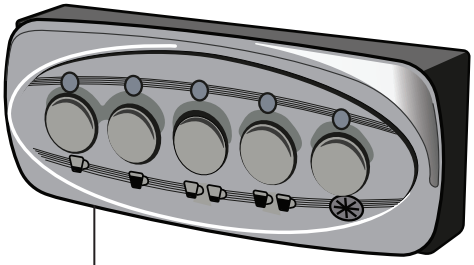

620731 16 PIN
GICAR CODE 9.9.13.97G

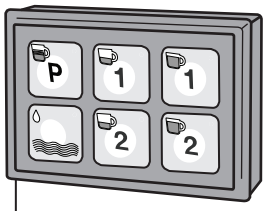

620705/A 16 PIN
GICAR CODE 9.9.09.25G

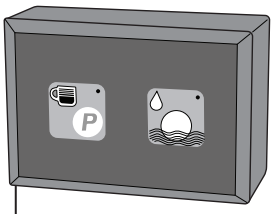

560086 5 PIN
GICAR CODE 9.9.09.01G

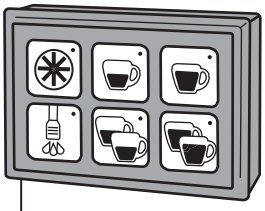

620705 16 PIN
GICAR CODE 9.9.09.28G

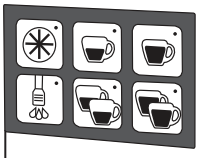

620748
GICAR CODE 8.9.48.76

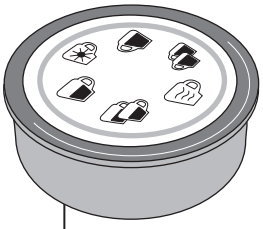

620741 16 PIN
GICAR CODE 9.9.13.26G

620742 16 PIN
GICAR CODE 9.9.13.53G

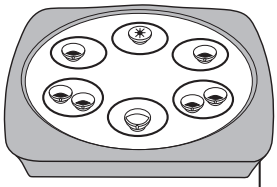

16 PIN **620743**
GICAR CODE 9.9.14.68G

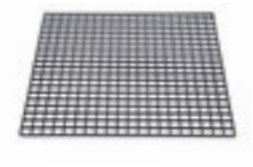

615346 310x310mm
Griglia appoggiatazze
Cupholder grid
Nero/*Black*

524563 215x215mm
Griglia appoggiatazze
Cupholder grid
Nero/*Black*
Per/*For*: Faema E61

611647 310x310mm
Griglia appoggiatazze
Cupholder grid
Bianco/*White*

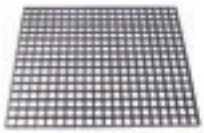

615347 310x250mm
Griglia appoggiatazze
Cupholder grid
Marrone/*Brown*

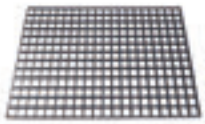

615348 310x200mm
Griglia appoggiatazze
Cupholder grid
Marrone/*Brown*

524591 L.296mm 1GR
524592 L.457mm 2GR
524593 L.622mm 3GR
Capottina
Window panel
Per/*For*:Faema E61Classic

524594 L.296mm 1GR
524595 L.457mm 2GR
524596 L.622mm 3GR
Capottina
Window panel
Per/*For*:
Faema E61Legend-Jubilè

630451 GR3 230V 125W
590x230mm
Resistenza Scaldatazze
Heating element Cupwarmer
Per/*For*: La San Marco

630458 GR4 230V 150W
850x250mm
Resistenza Scaldatazze
Heating element Cupwarmer
Per/*For*: La San Marco

705552 230V 150W 303x145mm
Resistenza Scaldatazze
Heating element Cupwarmer
Per/*For*: Nuova Simonelli
Victoria Arduino

705553 230V 100W 188x150mm
Resistenza Scaldatazze
Heating element Cupwarmer
Per/*For*: Nuova Simonelli
Victoria Arduino

460303 GR3 230V 200W
188x638mm
Resistenza Scaldatazze inox
Inox Heating element Cupwarmer
Per/*For*: Vibiemme

PIEDINI

GOMMA NERA - BLACK RUBBER

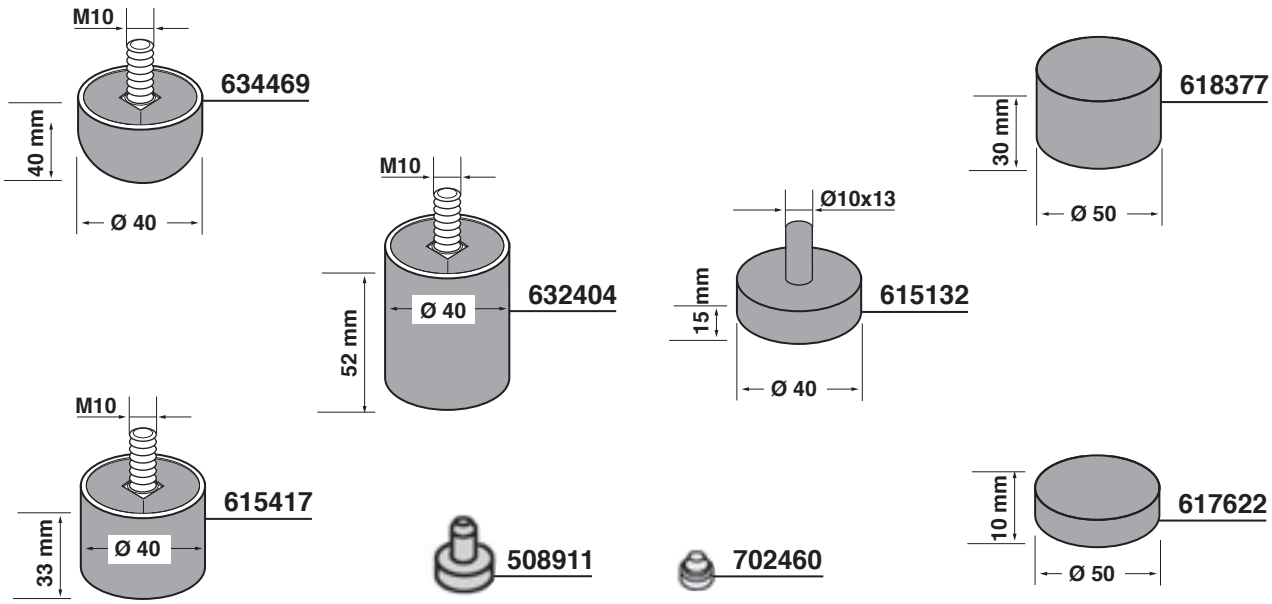

PLASTICA NERA - BLACK PLASTIC

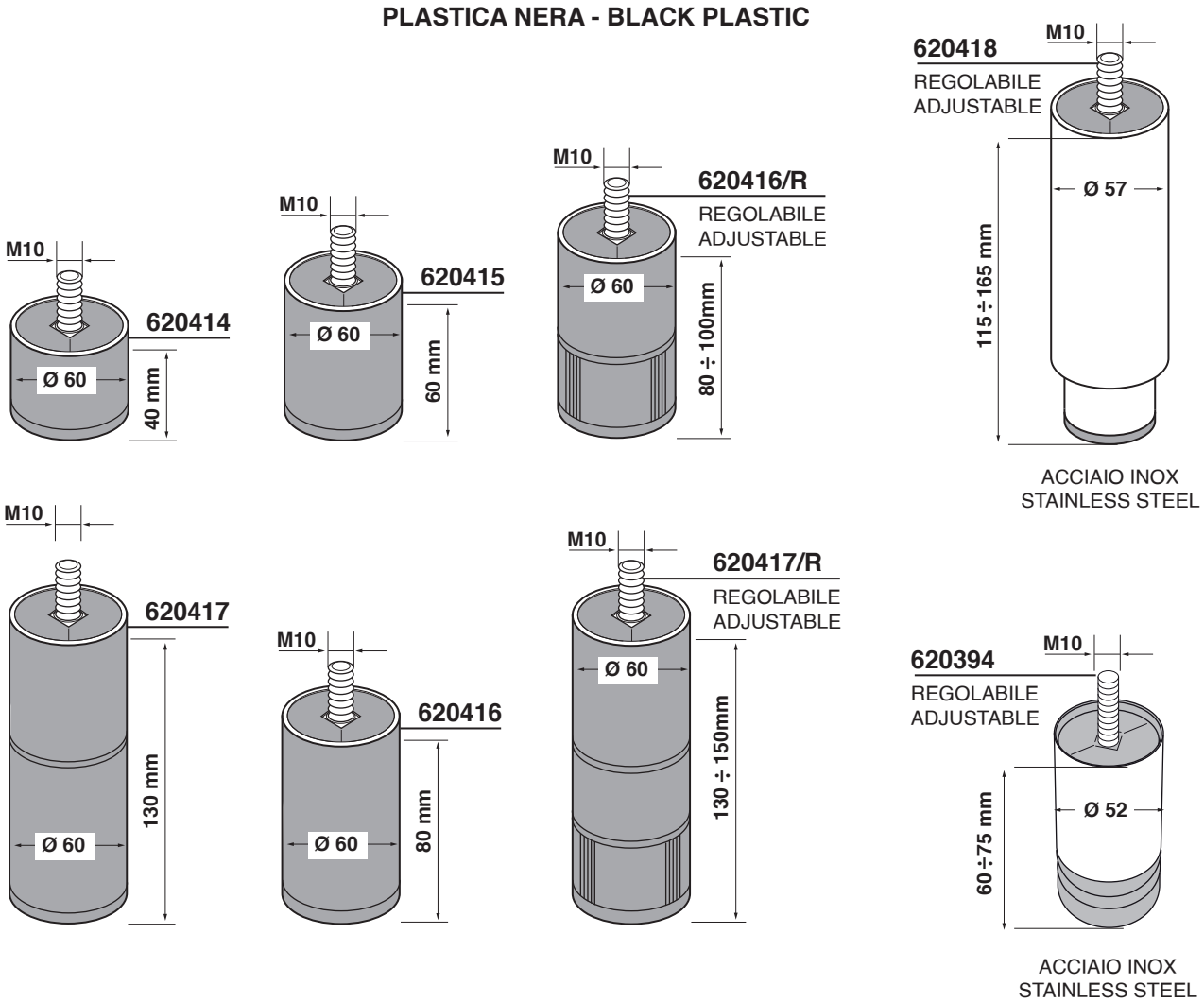

Fluid-o-Tech

560447 50L
Pompa Volumetrica
Volumetric pump
Per/*For:*
Universale/*Universal*

620406/1 100L
Pompa Volumetrica - NSF MOCA
Volumetric pump - NSF MOCA
Per/*For:*
Universale/*Universal*

620406 150L
Pompa Volumetrica - NSF MOCA
Volumetric pump - NSF MOCA
Per/*For:*
Universale/*Universal*

620406/2 200L
Pompa Volumetrica - NSF MOCA
Volumetric pump - NSF MOCA
Per/*For:*
Universale/*Universal*

620389 300L
Pompa Volumetrica - NSF
Volumetric pump - NSF
Per/*For:*
Universale/*Universal*

620406/X 150L
Pompa Volumetrica - NSF
Volumetric pump - NSF
Per/*For:*
Universale/*Universal*

620407/1 100L
Pompa volumetrica flangiata
Flanged volumetric pump
Per/*For:*
Cimbali - Faema

620407 200L
Pompa volumetrica flangiata
Flanged volumetric pump
Per/*For:*
Cimbali - Faema

630178 150L
Pompa volumetrica flangiata
Flanged volumetric pump
Per/*For:*
Cimbali - Casadio - Faema

710000 100L
Pompa a trascinamento magnetico
Magnetic drive pump
Per/*For:*
Universale/*Universal*

Procon

700008 100L
Pompa Volumetrica - NSF
Volumetric pump - NSF
Per/*For:*
Universale/*Universal*

700008/2 200L
Pompa Volumetrica - NSF
Volumetric pump - NSF
Per/*For:*
Universale/*Universal*

700008/F 150L
Pompa Volumetrica - NSF
Volumetric pump - NSF
Per/*For:*
Universale/*Universal*

700008/X 110L
Pompa Volumetrica inox-NSF
Volumetric pump inox - NSF
Per/*For:*
Universale/*Universal*

700012/X 150L
Pompa Volumetrica Inox-NSF
Volumetric pump inox - NSF
Per/*For:*
Universale/*Universal*

Ode

710010 PPS 200L
Pompa volumet
Rotary pump
Per/*For:*
Universale/*Universal*

Nuert

700047 50L
Pompa Volumetrica
Volumetric pump
Per/*For:*
Universale/*Universal*

700055 100L
Pompa volumetrica
Volumetric pump
Per/*For:*
Universale/*Universal*

700055/2 200L
Pompa volumetrica
Volumetric pump
Per/*For:*
Universale/*Universal*

700048/F PR3BZ 300L
Pompa volumetrica
Volumetric pump
Per/*For:*
Universale/*Universal*

700054 200L
Pompa volumetrica
Volumetric pump
Per/*For:*
Rancilio/Promac

700048/X 100L
Pompa volumetrica Inox -NSF
Volumetric pump inox - NSF
Per/*For:*
Universale/*Universal*

630177 150L
Pompa volumetrica flangiata
Flanged volumetric pump
Per/*For:*
Cimbali/Casadio/Faema

630177/X 150L
Pompa volumetrica Inox flangiata
Flanged volumetric pump Inox
Per/*For:*
Cimbali/Casadio/Faema

Ulka

617167 EAX5 120V-60Hz-52W
Pompa a vibrazione con portagomma
Vibration pump with rubber-holder
Per/*For:*
Universale/*Universale*

617160/11 EX5 120V-60Hz-41W
Pompa a vibrazione con portagomma
Vibration pump with rubber-holder
Per/*For:*
Universale/*Universale*

617169 EAX5 220V-60Hz-64W
Pompa a vibrazione con portagomma
Vibration pump with rubber-holder
Per/*For:*
Universale/*Universale*

617164 EP5 220V-50/60Hz-48W
Pompa a vibrazione con portagomma
Vibration pump with rubber-holder
Per/*For:*
Universale/*Universale*

617160/22 EX5 220V-50/60Hz 48W
Pompa a vibrazione con portagomma
Vibration pump with rubber-holder
Per/*For:* Universale/*Universale*

617168 EP4 230V-50Hz-48W
Pompa a vibrazione con portagomma
Vibration pump with rubber-holder
Per/*For:*
Universale/*Universale*

617165 EP5 240V-50/60Hz-48W
Pompa a vibrazione con portagomma
Vibration pump with rubber-holder
Per/*For:*
Universale/*Universale*

617160/24 EX5 24V-50/60Hz 48W
Pompa a vibrazione con portagomma
Vibration pump with rubber-holder
Per/*For:*
Universale/*Universale*

414061 NME 120V-60Hz-16W
Micropompa vapore - NSF
Steam micropump - NSF
Per/*For:*
Universale/*Universale*

415675 NME 230/240V-50Hz 16W
Micropompa vapore - NSF
Steam micropump - NSF
Per/*For:*
Universale/*Universale*

Fluid-o-Tech

620402 220V-50Hz-70W
Pompa a vibrazione
Vibration pump
Per/*For:*
Cimbali

620402/11 100/110-50/60Hz 70W
Pompa a vibrazione
Vibration pump
Per/*For:*
Cimbali

620419 DGD09NA02 24V DC-18W-3400giri
Pompa ad ingranaggi
Gear pump
Per/*For:*
Cimbali/Faema/Carimali

Invensys

617170 ARS 230V-50Hz-65W
Pompa a vibrazione con portagomma
Vibration pump with rubber-holder
Per/*For:*
Universale/*Universal*

Pompe volumetriche
Volumetric pump

408194
3/8M-3/8M
Filtro pompante
Pump Filter
Per/*For:*
Universale/*Universal*

700011 3/8M-3/8M
Valvola ritegno pompante
Pump charge block
Per/*For:*
Universale/*Universal*

700011/E 3/8M-3/8M
Valvola ritegno pompante
Pump charge block
Per/*For:*
Universale/*Universal*

514902
3/8M-3/8M
Filtro pompante
Pump Filter
Per/*For:*
Universale/*Universal*

514902/X
3/8M-3/8M
Filtro pompante acciaio inox
Stainless steel pump filter
Per/*For:*
Universale/*Universal*

521923 Ø41,5mm
Giunto gomma per pompa volumetrica a flangia
Rubber clamp ring volumetric pump connection
Per/*For:* Casadio/Cimbali/Faema

523082 Ø40mm
Giunto metallico per pompa volumetrica a flangia
Clamp ring volumetric pump metal coupling
Per/*For:* Casadio/Cimbali/Faema

608987 Ø40mm
Giunto metallico pompante
Pump metallic Joint
Per/*For:*
Casadio/Cimbali/Faema

635955 Ø35mm
Giunto gomma pompa Faema
Rubber pump motor connector
Per/*For:* Faema E61 Legend/Jubilè

635956 Ø35mm
Giunto metallico per pompa volumetrica
Metallic joint forvolumetric pump
Per/*For:* Faema E61 Legend/Jubilè

620390
Kit By-pass bilanciato
Balanced By-Pass Kit
Per/*For:*
Pompe Fluid-o-tech
Fluid-o-Tech Pumps

620441
Valvola cieca by pass bilanciato
Blind valve balanced by pass
Per/*For:*
Pompe Nuert / *Nuert Pumps*

700050
Fascetta inox opaco fissaggio pompante
Opaque stainless Steel hose clamp for pump fixing
Per/*For:*
Universale/*Universal*

700042
Fascetta inox fissaggio pompante
Stainless Steel hose clamp for pump fixing
Per/*For:*
Universale/*Universal*

Pompe a vibrazione
Vibration pump

620409 In M12x1- Out G.1/8 Drain Ø8mm
Valvola by pass pompa a vibrazione
Vibration pump by pass valve
Per/*For:*
Pompe a vibrazione Fluid-o-Tech
Fluid-o-Tech vibration pump

460200 1/8M-1/8F
By pass pompa a vibrazione
Vibration pump by pass
Per/*For:*
Vibiemme

620408
90° - 1/8F - Ø6mm
Raccordo pompa
Pump fitting
Per/*For:*
Pompe Ulka / *Ulka Pumps*

620413 Ø6x6mm
Portagomma pompa a vibrazione
Vibrating pump hose adaptor
Per/*For:*Pompe Ulka/*Ulka Pumps*

460202 100 C°
Termoprotettore per pompa a vibrazione
Thermoprotector for vibrating pump
Per/*For:* Universale/*Universal*

617162
Antivibrante a squadra per pompa a vibrazione
Square silent block for vibrating pump
Per/*For:* Ulka

617163
Antivibrante standard per pompa a vibrazione
Standard silent block for vibrating pump
Per/*For:* Ulka

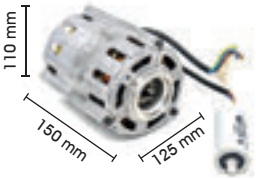

560459 RPM
230V - 50/60Hz -120W
Motore per pompa a fascetta
Clamp ring motor pump
Per/*For: Rocket Original*
Condensatore/*Capacitor* 6,3µF

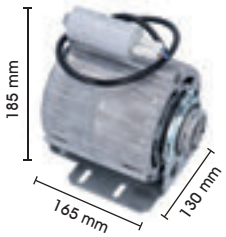

700084/22 RPM
220/230V - 50/60Hz - 165W
Motore per pompa a fascetta
Clamp ring motor pump
Per/*For:* Universale/*Universal*
Condensatore/*Capacitor* 10µF

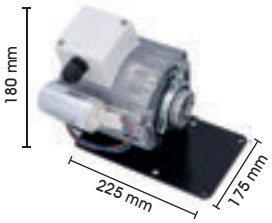

700085/11 RPM
110/120V - 50/60Hz - 330W
Motore per pompa a fascetta
Clamp ring motor pump
Per/For: Universale/*Universal*
Condensatore/*Capacitor* 16µF

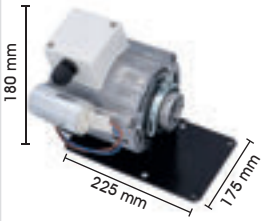

700085/22 RPM
220/240V - 50/60Hz - 330W
Motore per pompa a fascetta
Clamp ring motor pump
Per/*For:* Universale/*Universal*
Condensatore/*Capacitor* 10µF

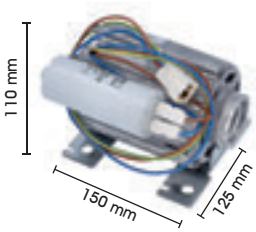

700086/11 RPM
110/115V - 50/60Hz - 120W
Motore per pompa a fascetta
Clamp ring motor pump
Per/*For:* Universale/*Universal*
Condensatore/*Capacitor* 25µF

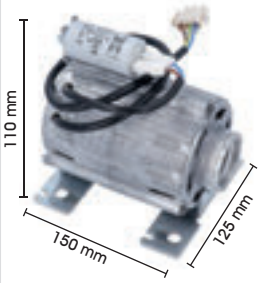

700086/22 RPM
230V - 50/60Hz - 150W
Motore per pompa a fascetta
Clamp ring motor pump
Per/*For:* Universale/*Universal*
Condensatore/*Capacitor* 6µF

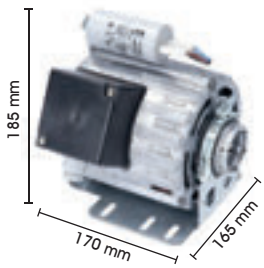

700154/22 RPM
220V - 50/60Hz - 165W
Motore per pompa a fascetta
Clamp ring motor pump
Per/*For:* Universale/*Universal*
Condensatore/*Capacitor* 10µF

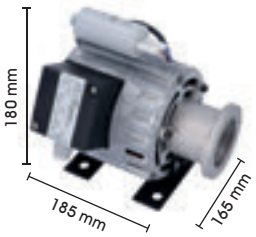

700155/22 RPM
230V - 50/60Hz - 150W
Motore per pompa a flangia
Flange motor pump
Per/*For:* Universale/*Universal*
Condensatore/*Capacitor* 10µF

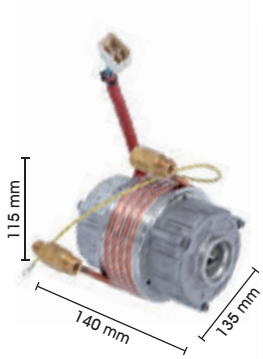

703023 RPM
220V - 50/60Hz - 330W
Motore interno per pompa a fascetta con raffreddamento ad acqua
Watercooled inner Clamp ring motor
Per/*For:* Astoria - Wega
Condensatore/*Capacitor* 7µF

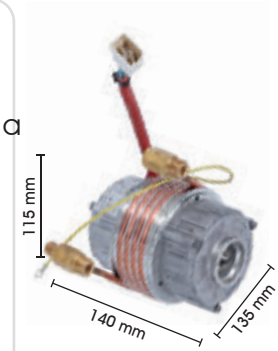

703023/11 RPM
110V - 60Hz - 330W
Motore interno per pompa a fascetta con raffreddamento ad acqua
Watercooled inner Clamp ring motor
Per/*For:* Astoria - Wega
Condensatore/*Capacitor* 7µF

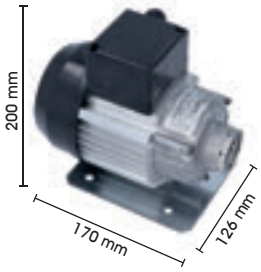

700095 RPM
220/230/240 - V50/60Hz - 300W
Motore per pompa
a fascetta
Clamp ring motor pump
Per/*For: Rancilio, Promac, Sanremo*
Condensatore/*Capacitor* 6,3µF

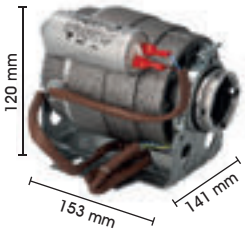

700122 Sisme
208/240V - 50/60Hz - 150/180W
Motore per pompa
a fascetta
Clamp ring motor pump
Per/*For:* Universale/*Universal*
Condensatore/*Capacitor* 8µF

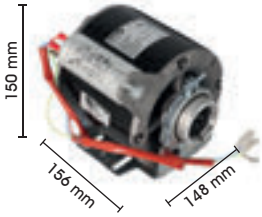

700126 Sisme
220/240V- 50/60Hz - 184/230W
Motore per pompa
a fascetta
Clamp ring motor pump
Per/*For:* Universale/*Universal*
Condensatore/*Capacitor* 10µF

636623 Elettr. F.Arduini
230V - 50/60Hz - 150W
Motore per pompa
a flangia
Flange motor pump
Per/*For: Faema E61 Legend Jubile*
Condensatore/*Capacitor* 10µF

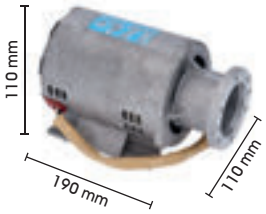

633416 Elettr. F.Arduini
220V - 50/60Hz - 170W
Motore per pompa
a flangia
Flange motor pump
Per/*For: Faema - Cimbali*
Condensatore/*Capacitor* 10µF

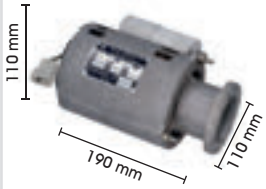

616601/11 Elettr. F.Arduini
110V - 60Hz - 170W
Motore per pompa
a flangia
Flange motor pump
Per/*For: Faema Compact*
Condensatore/*Capacitor* 40µF

703024
Ammortizzatore motore
Motor foot with spring
Per/*For:* Universale/*Universal*

400786
Ammortizzatore motore
Motor foot with spring
Per/*For:* Universale/*Universal*

700096
Kit connettore rapido
elettronico
Quick fit electric connection kit
Per/*For:* IP67

700032/22 RPM
220V - 50Hz - 165W
Motore completo di pompante "Nuert" a fascetta
Motor with clump ring "Nuert" pump
Per/*For:* Universale/*Universal*
Condensatore/*Capacitor* 10μF

700171/22 RPM
220V - 50/60Hz - 165W
Motore completo di pompante flangiato "Nuert"
Motor with "Nuert" pump with flange
Per/*For:* Universale/*Universal*
Condensatore/*Capacitor* 10μF

560461 Rocket
24 Vdc
Motore completo di pompante Fluid-o-Tech
Motor with Fluid-o-Tech pump
Per/*For:* Rocket

700072 Fluid o tech
24 Vdc - 48W
Motore completo di pompante Fluid-o-Tech
Motor with Fluid-o-Tech pump
Per/*For:* Universale/*Universal*

700073 Fluid o tech
24 Vdc - 90W
Motore completo di pompante Fluid-o-Tech
Motor with Fluid-o-Tech pump
Per/*For:* Universale/*Universal*

508911
Piedino di gomma motore
Motor rubber foot
Per/*For:* 700171/22

RICAMBI UNIVERSALI Tav. 38

INOX STAINLESS STEEL

RENEKA

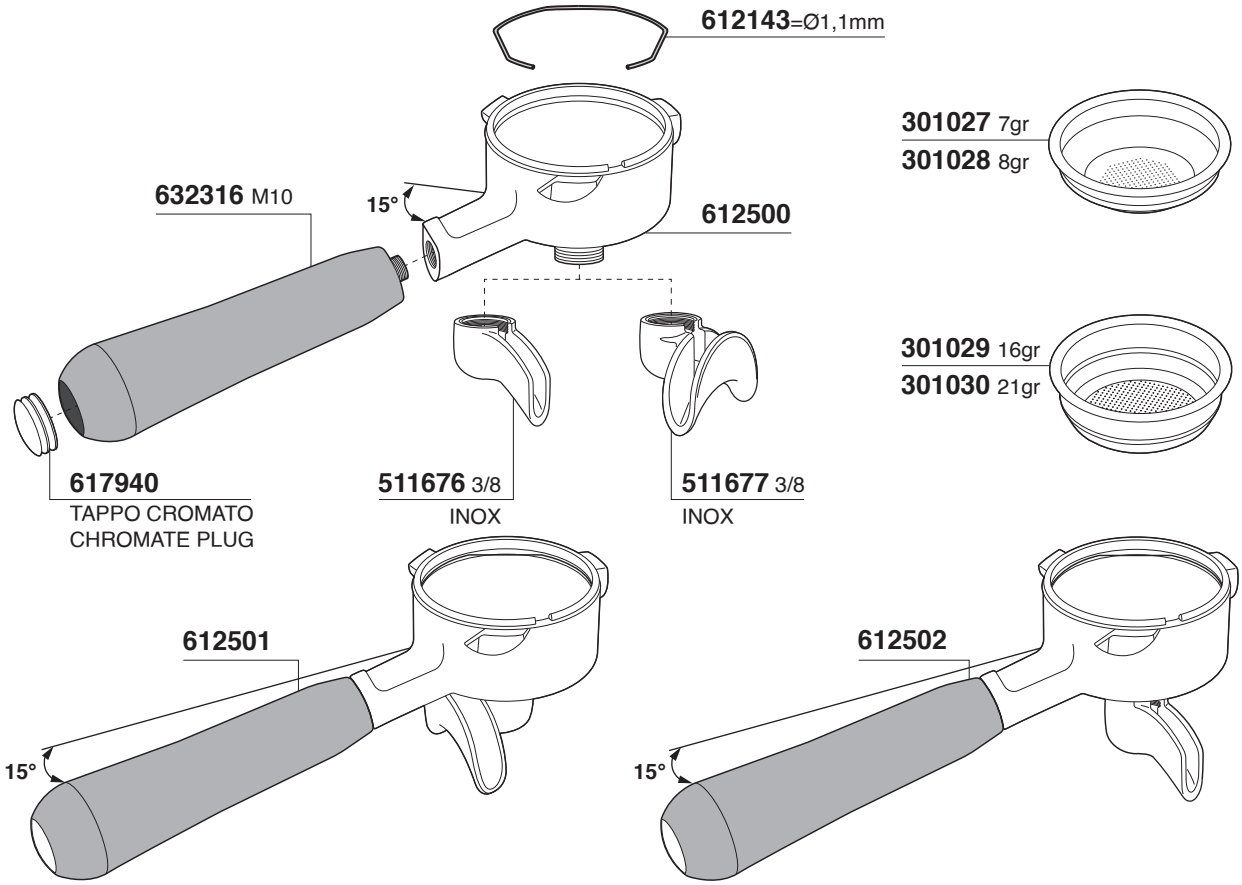

CHROMED BRASS

RENEKA

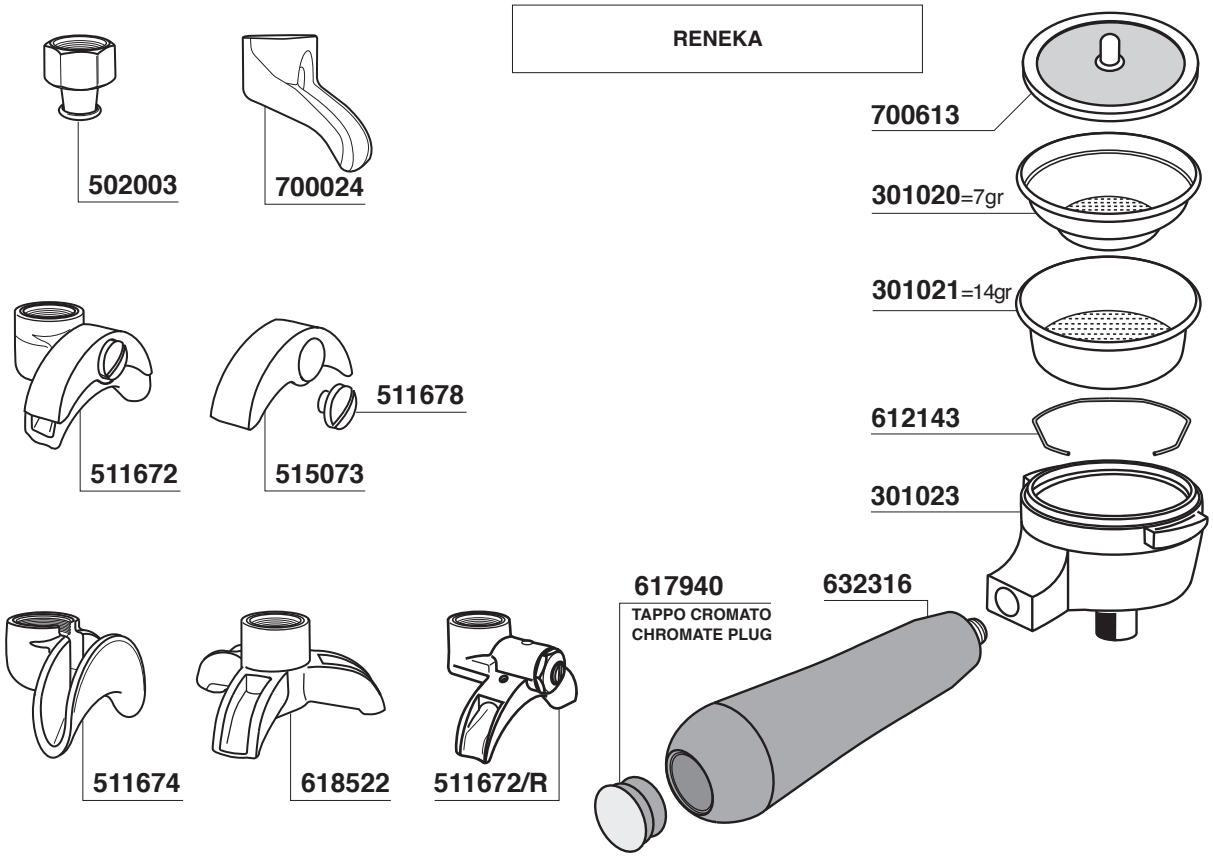

Portafiltro per capsule
Capsule filter holder

620922 Astoria- Brasilia - Bezzera
620924 Cimbali
620926 La Pavoni
620927 Faema - Casadio
620928 Gaggia - Saeco
620929 San Marco
620929/L San Marco a leva
620930 Nuova Simonelli
620931 Dalla Corte
620932 Carimali

Portafiltro per capsule bidose
Capsule filter holder bidose

620933 BFC - Brasilia - Brugnetti - Futurmat - Marzocco - La Scala San Remo - SV - Vibiemme - Wega
620934 Astoria - Brasilia - Bezzera
620936 Cimbali

Portafiltro per capsule con valvola
Capsule filter holder with valve

620922/V Astoria - Brasilia - Bezzera
620924/V Cimbali
620927/V Faema
620928/V Gaggia - Saeco
620929/V San Marco
620929/LV San Marco a Leva
620930/V Nuova Simonelli
620931/V Dalla Corte
620932/V Carimali
620935/V Astoria 53mm

Portafiltro per capsule Segrafedo
Segafredo Capsule filter holder

620921/S Brugnetti - Cime - La Marzocco - La Scale - Sanremo - SV Italia - Vibiemme - Wega
620922/S Astoria-Brasilia-Bezzera
620923/S Elektra-Rancilio-Rocket
620924/S Cimbali
620925/S La Spaziale
620926/S La Pavoni
620927/S Brasilia B61-Faema-Futurmat
620930/S Nuova Simonelli

Portafiltro per capsule new

Capsule filter holder new

Per/For: BFC - Brugnetti - Cime - La Scala - Rancilio - Sanremo - SV ITALIA - Vibiemme - Wega - La Marzocco - Synesso - Slayer

620940 Capsula singola con beccuccio 300202

620944 Capsula singola con beccuccio 630085/8

620947 Capsula singola con beccuccio 502003

620948 Capsula singola con beccuccio 700024

Per/For: BFC - Brugnetti - Cime - La Scala - Rancilio - Sanremo - SV ITALIA - Vibiemme - Wega

620946 Capsula doppia con beccuccio 502003

620941 Capsula doppia con beccuccio 511673

620945 Capsula doppia con beccuccio 511672

Per/For: Faema

620949 Capsula singola con beccuccio 502003

620939 Capsula doppia con beccuccio 511672

Per/For: Marzocco - Synesso - Slayer

620943 Capsula doppia con beccuccio 511672

Per/For: La Spaziale

620954 Capsula singola per portadoccia H11con beccuccio 502003

620951 Capsula singola per portadoccia H13 con beccuccio 502003

Per/For: Cimbali

620955 Capsula singola con beccuccio 502003

Portafiltro per capsule new

Capsule filter holder new

Per/For: BFC - Brugnetti - Cime - La Scala - Rancilio - Sanremo - SV ITALIA - Vibiemme - Wega - La Marzocco - Synesso - Slayer

620940/V Capsula singola con valvola e beccuccio 300202

620947/V Capsula singola con valvola e beccuccio 502003

620948/V Capsula singola con valvola e beccuccio 700024

Per/For: BFC - Brugnetti - Cime - La Scala - Rancilio - Sanremo - SV ITALIA - Vibiemme - Wega

620946/V Capsula doppia con valvola e beccuccio 502003

620941/V Capsula doppia con valvola e beccuccio 511673

620945/V Capsula doppia con valvola e beccuccio 511672

Per/For: Faema

620949/V Capsula singola con valvola e beccuccio 502003

620939/V Capsula doppia con valvola e beccuccio 511672

Per/For: Marzocco - Synesso - Slayer

620943/V Capsula doppia con valvola e beccuccio 511672

Per/For: La Spaziale

620954/V Capsula singola con valvola per portadoccia H11 mm e beccuccio 502003

620951/V Capsula singola con valvola per portadoccia H13 mm e beccuccio 502003

Per/For: Cimbali

620955/V Capsula singola con valvola e beccuccio 502003

PORTAFILTRI SENZA FONDO COMPLETI

Complete naked filter holders

300214/N
Portafiltro senza fondo
Naked filter holder
Compatibilità/Compatibility:
Sacome Conti
526757 21gr
Filtro/*Filter*

460016/N
Portafiltro senza fondo
Naked filter holder
Compatibilità/Compatibility:
Brugnetti, BFC, Cime, ECM Expobar, Fiamma RST, Fiorenzato CS, Grimac, Isomac, La Pavoni, Sab Italia, Sanremo, VBM, Wega
526757 21gr
Filtro/*Filter*

573525/N
Portafiltro senza fondo
Naked filter holder
Compatibilità/Compatibility:
Brasilia gruppo B61, Brugnetti, Expobar, Fiamma RST, Faema, Futurmat
526757 21gr
Filtro/*Filter*

573525/LMN
Portafiltro senza fondo
Naked filter holder
Compatibilità/Compatibility:
La Marzocco, Slayer, Synesso
526757 *21gr*
Filtro/*Filter*

700249/N
Portafiltro senza fondo
Naked filter holder
Compatibilità/Compatibility:
Cimbali
526757 21gr
Filtro/*Filter*

700399/N
Portafiltro senza fondo
Naked filter holder
Compatibilità/Compatibility:
La San Marco, Gruppo Izzo
526405/A 21gr
Filtro/*Filter*

700565/N
Portafiltro senza fondo
Naked filter holder
Compatibilità/Compatibility:
Gaggia, Saeco Aroma
700256 21gr
Filtro/*Filter*

700721/N
Portafiltro senza fondo
Naked filter holder
Compatibilità/Compatibility:
Astoria, Bezzera, Brasilia, Gruppo BE, Fiorenzato CS, Piazza San Marco
526757 21gr
Filtro/*Filter*

700804/N
Portafiltro senza fondo
Naked filter holder
Compatibilità/Compatibility:
La Pavoni
526757 21gr
Filtro/*Filter*

700299/N
Portafiltro senza fondo
Naked filter holder
Compatibilità/Compatibility:
Cime, Ecm DE, Elektra, Magister, Profitec, Promac, Rancilio, Rocket
526757 21gr
Filtro/*Filter*

703200/N
Portafiltro senza fondo
Naked filter holder
Compatibilità/Compatibility:
La Spaziale
526211 21gr
Filtro/*Filter*

700721/AP
Portafiltro senza fondo
Naked filter holder
Compatibilità/Compatibility:
Astoria P4Y, Wega Concept 52
526207 14gr
Filtro/*Filter*

703414/N
Portafiltro senza fondo
Naked filter holder
Compatibilità/Compatibility:
Simonelli, Victoria Arduino
526757 21gr
Filtro/*Filter*

701854/N
Portafiltro cromato senza fondo (tipo nuovo)
Naked filter holder (new type)
Compatibilità/Compatibility:
La Pavoni Europiccola,
Gaggia G105/G106
701851 14gr
Filtro/*Filter*

703815/N
Portafiltro senza fondo
Naked filter holder
Compatibilità/Compatibility:
Carimali
526202 14gr
Filtro/*Filter*

705107
Portafiltro senza fondo
Naked filter holder
Compatibilità/Compatibility:
Dalla Corte
526405/A 21gr
Filtro/*Filter*

620651/N
Portafiltro senza fondo
Naked filter holder
Compatibilità/Compatibility:
Brugnetti, BFC, Cime, ECM Expobar, Fiamma RST, Fiorenzato CS, Grimac, Isomac, La Pavoni, Sab Itali Sanremo, VBM, Wega
620652 42gr
Filtro/*Filter*

PORTAFILTRI CIALDE E PORTAFILTRI TEFLONATI

Portafilters for pods and teflon coated filter holder

Portafiltri per cialde
Portafilters for pods

620190
Brasilia Gruppo B61, Brugnetti, Expobar, FiammaRST, Faema, Futurmat

620190/A
Astoria, Bezzera, Brasilia Gruppo BE, Fiorenzato CS Piazza San Marco

620190/AP Astoria P4Y, Wega concept 52

620190/C Cimbali
620190/CA Carimali
620190/DC Dalla Corte
620190/G Gaggia, Saeco Roma
620190/LM La Marzocco, Slayer, Synesso
620190/NS Nuova Simonelli, Victoria Arduino
620190/P La Pavoni
620190/R Reneka
620190/SM La San Marco, Gruppo Izzo
620190/SP La Spaziale

620190/V
Brugnetti, BFC, Cime, ECM, Expobar, Fiamma RST, Fiorenzato CS, Grimac, Isomac, La Pavoni, Sab Italia, San Remo, VBM,

Portafiltri teflonati
Teflon coated filter holder

620903 Cimbali
620906 Nuova Simonelli, Victoria Arduino

PRESSOSTATI

Pressure Switches

300074 1/4M 10A 250VAC 1,3BAR
Pressostato Ma-Ter
Pressurestat Ma-Ter
Per/*For:* VBM,La Marzocco

413838 1/8M 15A 250VAC 0.1-1BAR
Pressostato Barksdale
Pressurestat Barksdale
Per/*For:* Brasilia

507034 1/4M 16A 250V 1BAR
Pressostato Signal Lux M3
Pressurestat Signal Lux M3
Per/*For:* Expobar

707001 1/8M 250V 1.5BAR
Pressostato
Pressurestat
Per/For: Astoria CMA P4Y, Wega my concept

616592 1/4M 20A 0,5-1,4BAR
Pressostato tripolare Sirai
Tripolar pressurestat Sirai
Per/*For:* Unverale/*Universal*

616597 1/4M 30A 0.5-1.4BAR
Pressostato tripolare Sirai
Tripolar pressurestat Sirai
Per/*For:* Unverale/*Universal*

616599 1/4M 25A 0,5-1,4BAR
Pressostato tripolare Parker
Tripolar pressurestat Parker
Per/*For:* Unverale/*Universal*

700124 EMERSON SIRAI
P302/6 Ø 55mm
Kit Membrane Pressostato
Pressurestat Membrane Kit
Per/*For:* 616597

703013 1/8M 15A 250VAC
0.5-1.2BAR
Pressostato Mater
Pressurestat Mater
Per/*For:* Astoria CMA, Wega

703855 1/4M 16A 250VAC
0.5-1.5BAR
Pressostato Mater
Pressurestat Mater
Per/*For:* Carimali

704105 1/4M 15A 250V
0,5/1,2BAR
Pressostato Mater XP110
Pressurestat Mater XP110
Per/*For:* Elektra, Isomac, *La Pavoni*

616591 1/4M 16A 230VAC
0.5-1.5BAR
Pressostato Mater
Pressurestat Mater
Per/*For:* BFC, Royal, Fiorenzato CS, Grimac

700662 1/4M 16A 250VAC
0.5-1.5BAR
Pressostato Mater
Pressurestat Mater
Per/*For:* BFC, Royal, Bezzera, Carimali, Cimbali, Conte Sacome, Gaggia, Saeco, La Marzocco

701814 1/4M 16A 250VAC
0.5-1.2BAR
Pressostato Mater
Pressurestat Mater
Per/*For:* Gaggia G105/G106 La Pavoni Europiccola

616605 1/4M 16A 250VAC
1.1BAR
Pressostato Campini
Pressurestat Campini
Per/*For:* Simonelli,BFC, Royal, Rocket

616604 1/4M 16A 250VAC
1.4BAR
Pressostato Campini
Pressurestat Campini
Per/*For:* Simonelli, Spinel, BFC, Royal, Rocket

RICAMBI UNIVERSALI

RACCORDI

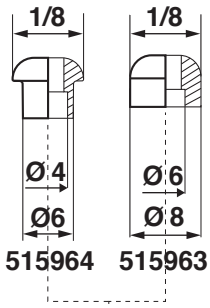

515964 515963

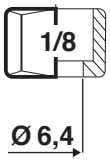

511531

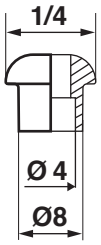

522217/4

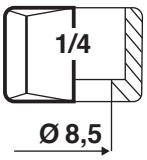

511532/8

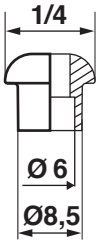

522217

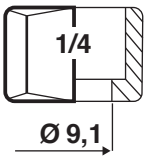

511532

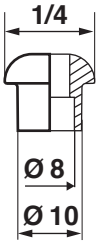

522217/8

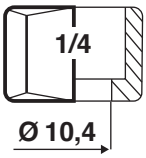

511533

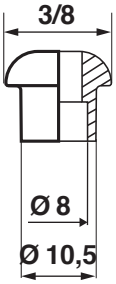

527854

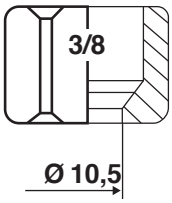

547235

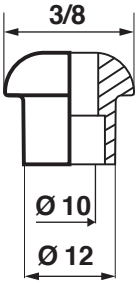

520553

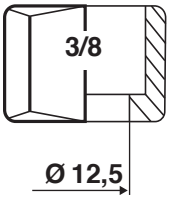

700000

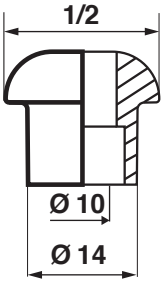

515966

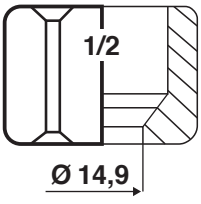

515968

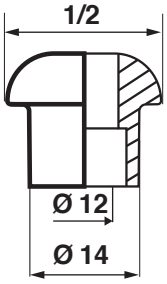

515965

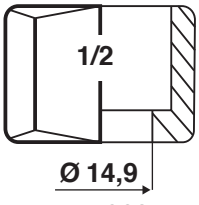

515968

547242

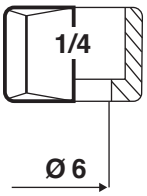

511532/6

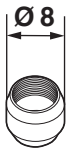

547244

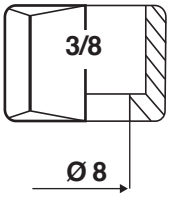

547237

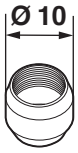

547245

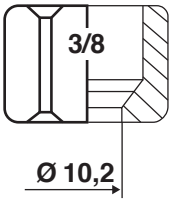

547235

547246

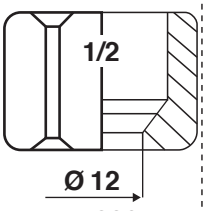

547236

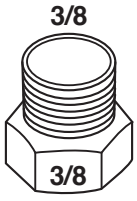

547275 10 mm
522129 12 mm

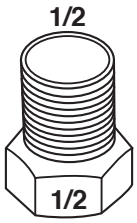

522130

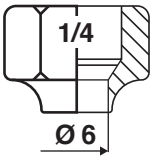

547360

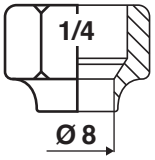

547362

547241

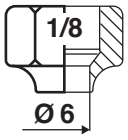

547361

RACCORDI

620550 1/8M-1/8M-1/8M
620551 1/4M-1/4M-1/4M
620552 3/8M-3/8M-3/8M
620553 1/2M-1/2M-1/2M

620554 1/8F-1/8F-1/8F
620554F 1/8F-1/8F-1/8F TEA
620555 1/4F-1/4F-1/4F
620556 3/8F-3/8F-3/8F
620557 1/2F-1/2F-1/2F

620558 1/8F-1/8F-1/8M
620559 1/4F-1/4F-1/4M
620560 3/8F-3/8F-3/8M
620561 1/2F-1/2F-1/2M

620583 1/8F-1/8M-1/8M
620584 1/4F-1/4M-1/4M
620544 3/8F-3/8M-3/8M

620585 1/8M-1/8M-1/8F
620586 1/4M-1/4M-1/4F

620588 1/8M-1/8F-1/8F

620562 1/8M-1/8M
620563 1/4M-1/4M
620564 3/8M-3/8M
620565 1/2M-1/2M

400226 1/8M-1/4M

620566 1/8F-1/8F
620567 1/4F-1/4F
620568 3/8F-3/8F
620569 1/2F-1/2F

620570 1/8M-1/8F
620571 1/4M-1/4F
620572 3/8M-3/8F
620573 1/2M-1/2F

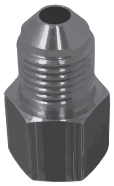

620499 1/4M-1/4F

Ø4

400158 1/8F-Ø4

703068 1/2M-1/2M

620549 3/8M-3/8M-1/4F
703058 1/2M-1/2M-1/4F

400159 1/8F-Ø4
400157 1/8F-Ø6

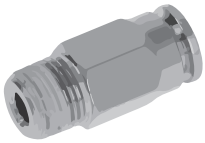

Ø6

408280 1/8M-Ø6

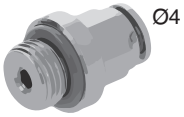

Ø4

410761 1/8M-Ø4

410760 1/8M-Ø4
408858 1/8M-Ø6
410762 1/4M-Ø4
410763 1/4M-Ø6

RICAMBI UNIVERSALI Tav. 54

RACCORDI PER TUBI

Ø 6

1/8M

700043 1/8M Ø6

Ø 8

1/4M

620587 1/4M Ø8

Ø 6

1/8M

700043/C 1/8M Ø6

Ø 6

1/8M

700043/M 1/8M-Ø6

Ø 6

1/8M

620547 1/8-Ø6

Ø 6

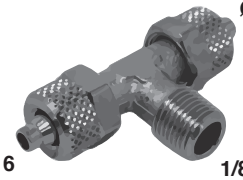

Ø 6

1/8M

620548 1/8M-Ø6-Ø6

Ø 4

1/8M

700053 1/8M-Ø4

Ø 12

1/2M

700033 1/2M-Ø12

Ø 8

3/8M

700002 3/8M-Ø8

3/8F

Ø12,5

700000 3/8F-Ø12,5
700000/C 3/8F-Ø12,5 CHROMED

Ø8

700001 Ø8

Ø10

700001/10 Ø10

3/4M 3/4M

3/4F

700188 3/4F-3/4M-3/4M

Ø6

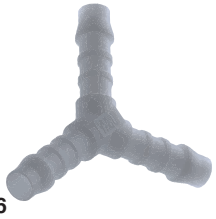

Ø6 Ø6

617166 Ø6-Ø6-Ø6

Ø8

Ø8 Ø8

700671 Ø8-Ø8-Ø8

Ø8

Ø8 Ø8

700692 Ø8-Ø8-Ø8

RACCORDI PER TUBI

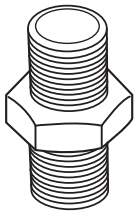

700023 1/8M - 1/8M
700039 1/4M - 1/4M
514901 3/8M - 3/8M
514903 3/8M - 3/8M TEA
514902 3/8M - 3/8M
CON FILTRO/WITH FILTER
700034 1/2M - 1/2M
620401 3/4M - 1/2M

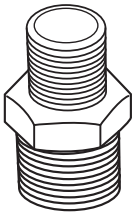

700056 1/8M - 1/4M
620581 1/8M - 3/8M
700036 1/4M - 3/8M
700035 3/8M - 1/2M
700041 3/8M - 3/4M
700098 1/2M - 3/4M
700114 1"M - 3/4M
620578 1"M - 3/8M

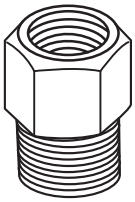

620399 1/8F - 1/4M
700046 1/8F - 3/8M
620398 1/4F - 1/8M
700082 1/4F - 3/8M
700091 1/4M - 3/8F
700090 3/8F - 1/2M
620582 3/8F - 1/8M
700089 3/8M - 3/8F
700092 1/2F - 3/8M
700083 3/4F - 1/2M
700093 3/4F - 3/8M

620574 1/8F-1/8F
620410 1/4F-1/4F
620411 3/8F-3/8F
620575 1/2F-1/2F

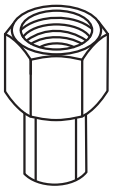

620576 1/8F - 1/4F
620546 1/4F - 1/4M
620412 1/4F - 3/8F
620577 3/8F - 1/2F

511526 1/8F - 1/4M
511528 1/4F - 1/8M
511527 1/4F - 3/8M
511529 3/8F - 1/2M
700040 3/8F - 3/4M
ES.22
700059 3/8F - 3/4M
ES.26
511530 1/2F - 3/4M

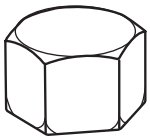

620580/1 1/8F
620579/2 1/4F
620579/4 1/2F
620579/3 3/8F

GUARNIZIONE TEFLON/TEFLON GASKET
529010/1 Ø1/8
529010/2 Ø1/4
529010/3 Ø3/8
529010/4 Ø1/2
529010/5 Ø3/4
GUARNIZIONE RAME/COPPER GASKET
524551 Ø1/8

620579/1 1/8M
620579/2 1/4M
620579/3 3/8M
620579/4 1/2M

GUARNIZIONE TEFLON/TEFLON GASKET
529011/1 Ø1/8
529011/2 Ø1/4
529011/3 Ø3/8
529011/4 Ø1/2
529011/5 Ø3/4

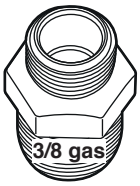

FOR USA
300056 5/8 inch
300055 9/16 inch

700022
mt.12x12mmx0,07mm

RICAMBI UNIVERSALI Tav.56

RUBINETTI

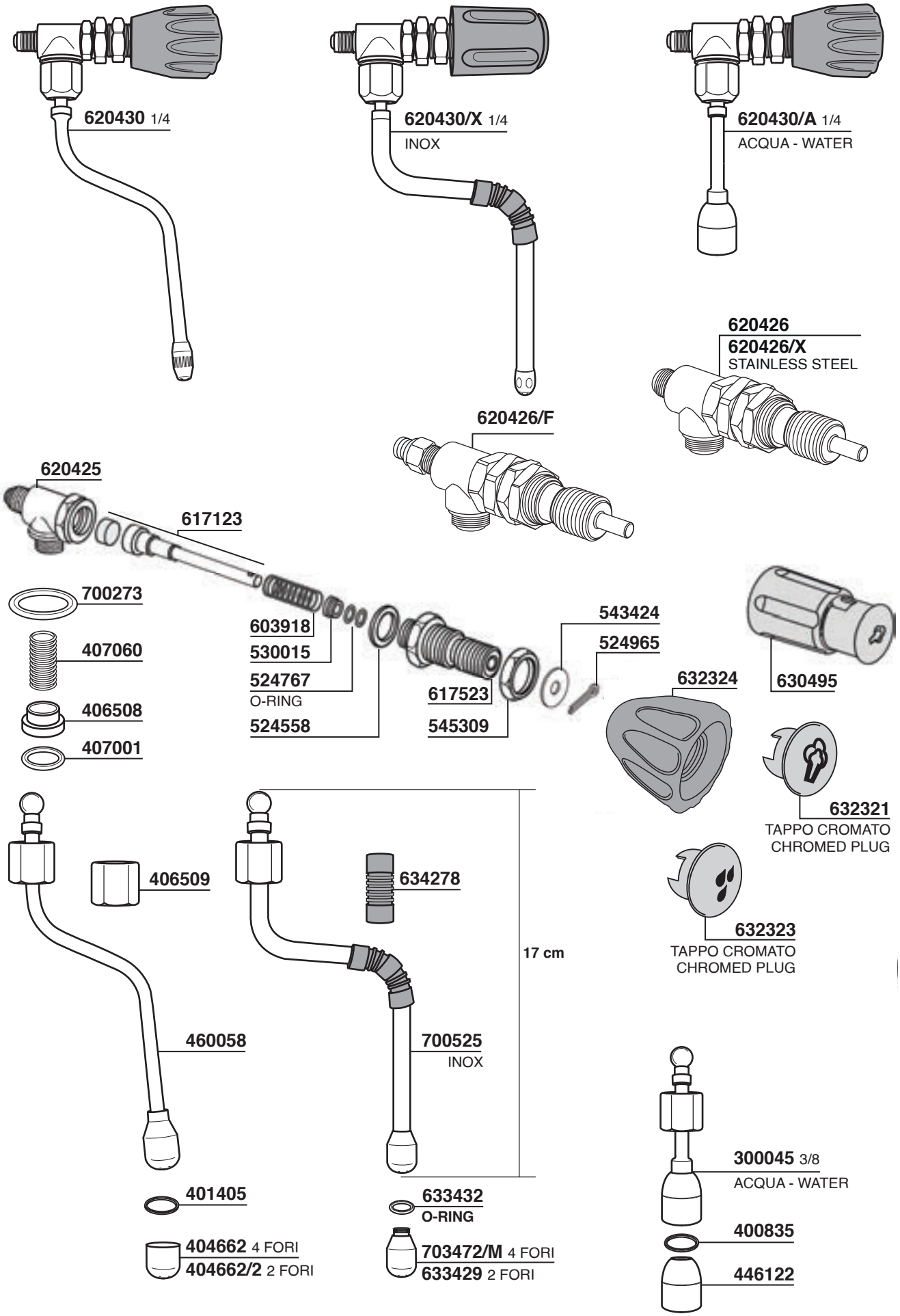

RUBINETTI

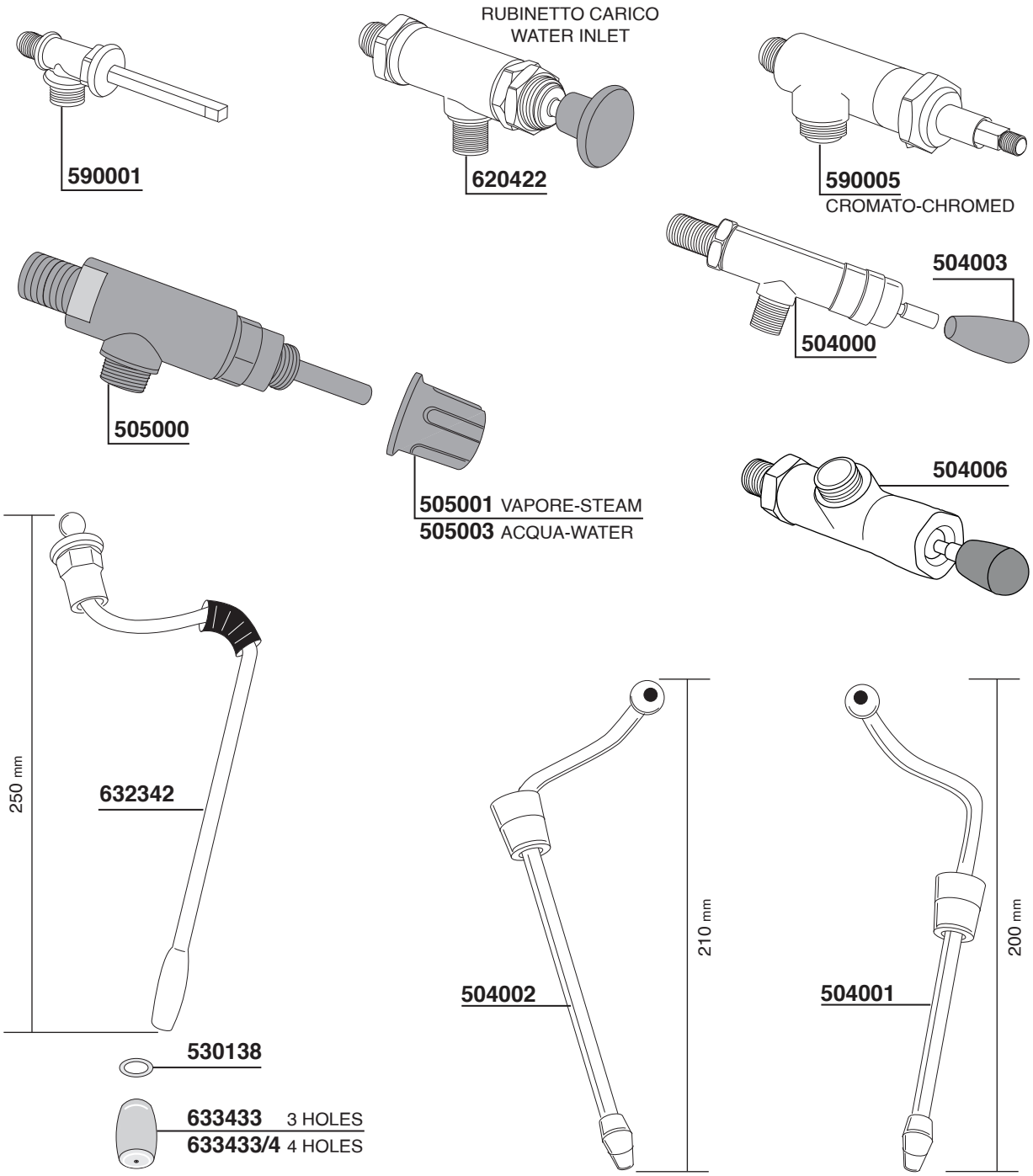
RUBINETTO CARICO
WATER INLET
590001
620422
590005
CROMATO-CHROMED
504003
504000
505000
505001 VAPORE-STEAM
505003 ACQUA-WATER
504006
250 mm
632342
210 mm
504002
200 mm
504001
530138
633433 3 HOLES
633433/4 4 HOLES

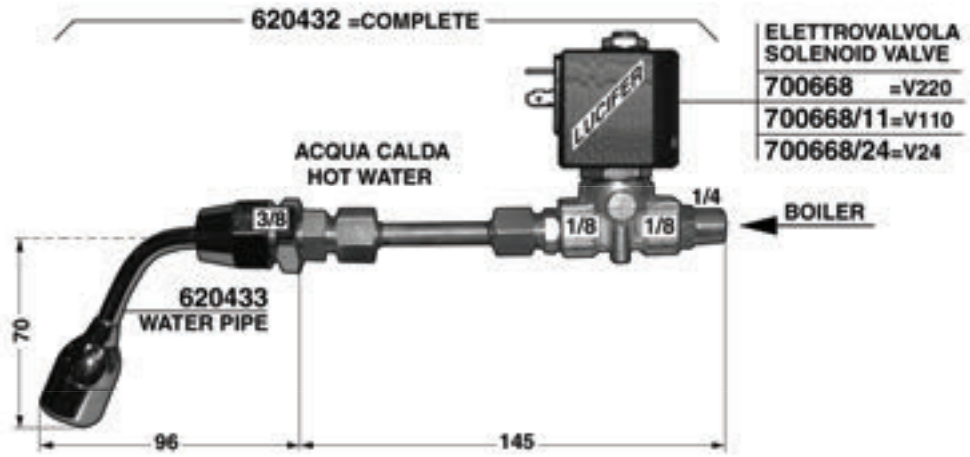
620432 =COMPLETE
ELETTROVALVOLA
SOLENOID VALVE
700668 =V220
700668/11=V110
700668/24=V24
LUCIFER
ACQUA CALDA
HOT WATER
3/8
1/8
1/8
1/4
BOILER
620433
WATER PIPE
70
96
145

RICAMBI UNIVERSALI Tav.58

RUBINETTI

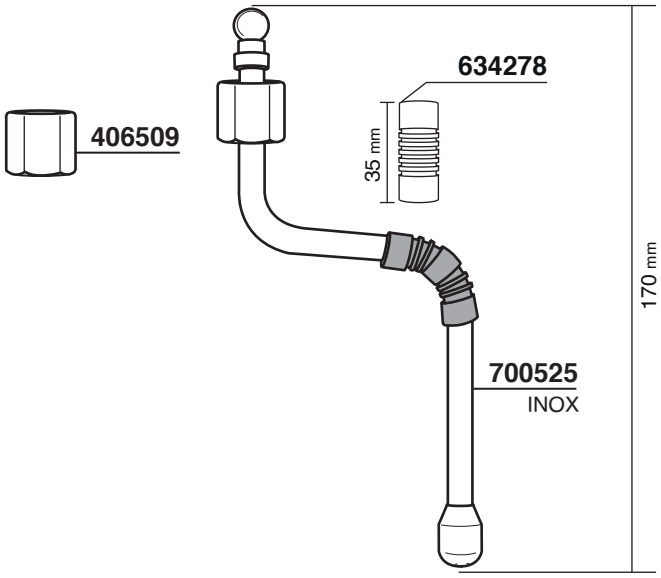

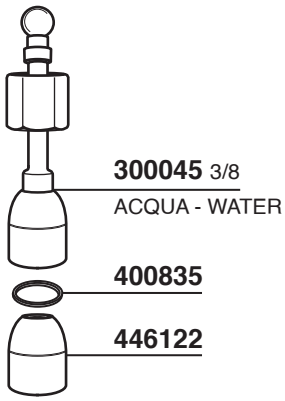

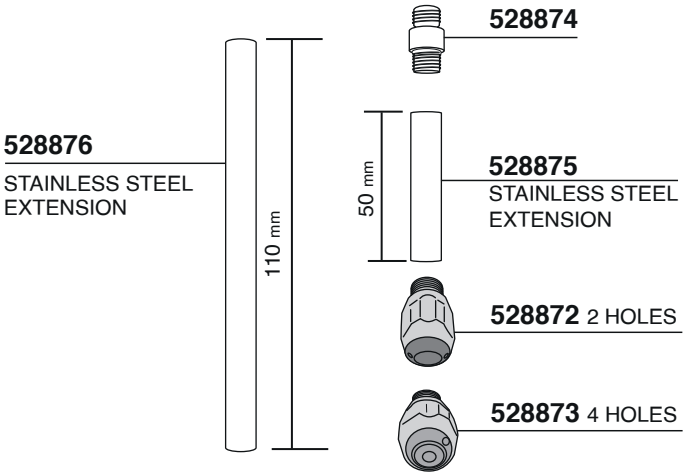

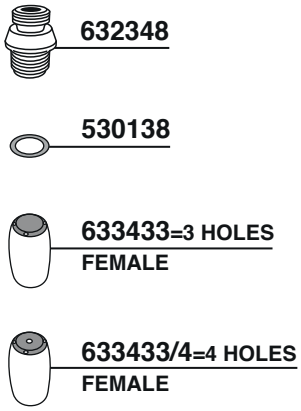

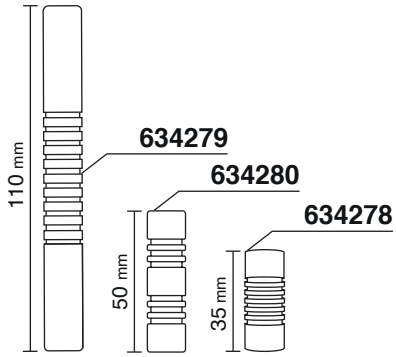

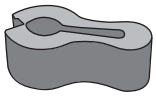

411972 ø 10

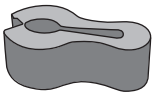

412954 ø 8

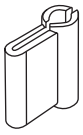

700754
ANTISCOTTATURA
ANTISCORCHING

TUBI

TUBI GOMMA - RUBBER HOSES
FOOD QUALITY - BAR 25 - t.110°C

3/8F - 3/8F CONICO - CONICAL

700014 50 cm
700015 60 cm
700016 80 cm
700017 150 cm
700018 200 cm

TUBI INOX - STAINLESS STEEL HOSES
BAR 12 - t.90°

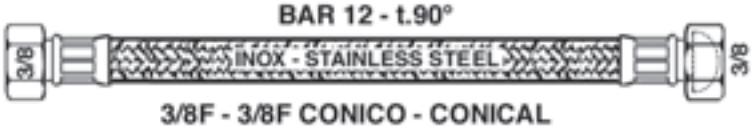

3/8F - 3/8F CONICO - CONICAL

700182 50 cm
700183 80 cm
700196 100 cm
300050 120 cm
700184/S 150 cm
300051 210 cm

TUBI INOX - STAINLESS STEEL HOSES
BAR 12 - t.90°

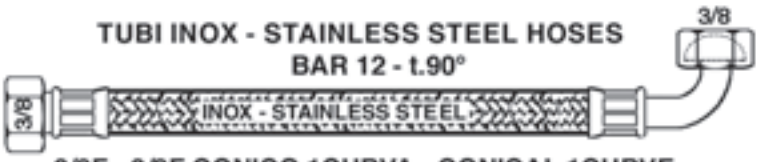

3/8F - 3/8F CONICO 1CURVA - CONICAL 1CURVE

700186 50 cm
700184 150 cm
700185 200 cm

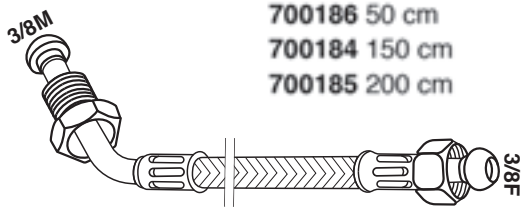

3/8M - 3/8F CONICO 1 CURVA - CONICAL 1 CURVE

617886 36 cm

TUBI INOX - STAINLESS STEEL HOSES
BAR 12 - t.90°

3/4F -3/4F - PIANO 1CURVA - FLAT 1CURVE

700187 150 cm
700187/2 200 cm

TUBI INOX - STAINLESS STEEL HOSES
BAR 12 - t.90°

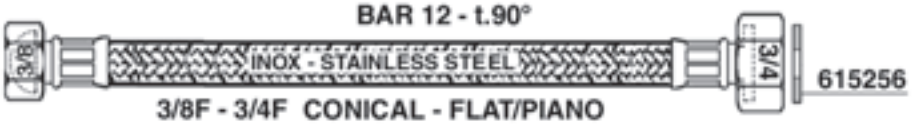

3/8F - 3/4F CONICAL - FLAT/PIANO

300052 150 cm

700250 37cm **1/8FP - 1/8 FP**
700250/C 37cm **1/8FC - 1/8 FC**

TUBI INOX - STAINLESS STEEL HOSES
BAR 12 - t.90°

3/8F - 3/4F - PIANO 1CURVA - FLAT 1CURVE

300053 200 cm
300054 80 cm

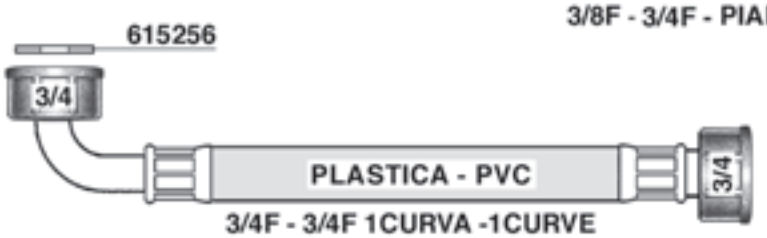

3/4F - 3/4F 1CURVA -1CURVE

615273 200 cm
615274 150 cm

3/4F - 3/4F 1CURVA -1CURVE

615275 200 cm
615276 150 cm

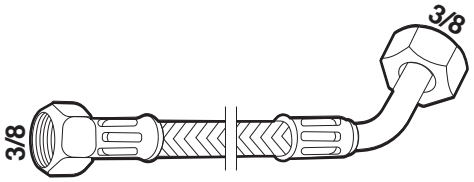

3/8F - 3/8F PIANO 1 CURVA - FLAT 1 CURVE

700618 25 cm
700618/L 36 cm

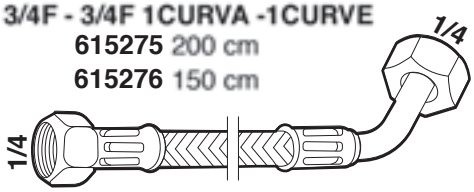

1/4F - 1/4F PIANO 1 CURVA - FLAT 1 CURVE

300292 28 cm

RICAMBI UNIVERSALI Tav.60

TUBI

TUBI GOMMA - RUBBER HOSES
BAR 25 - t 110°C

GOMMA - RUBBER

700003 Ø 8x17
700003/10 Ø 10x17

TUBI SILICONE - SILICON HOSES

SILICONE - SILICON

700197/6 Ø 3x6
700197 Ø 4x7
700197/8 Ø 5x8
700197/9 Ø 6x9
700197/12 Ø 8x12
700197/10 Ø 10x15

527002 160X2,5mm
527003 200x3,6mm
527006 280x3,6mm

TUBO GAS - GAS HOSE

700198 Ø 13x20

TUBO CRISTALL - CRISTALL HOSES

CRISTALL

560050 Ø 4x6

TUBI RILSAN - RILSAN HOSES
BAR 20 - t 20°C

RILSAN

560048 Ø 4x6
560049 Ø 6x8

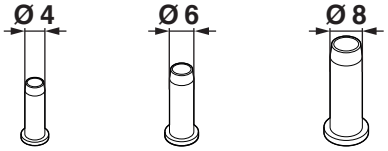

552273 **552273/6** **552273/8**

TUBI TEFLON - TEFLON HOSES

TEFLON

408593 Ø 4x2
560047 Ø 5x3
405335 Ø 6x4
560049/T Ø 6x8

TUBI SCARICO TRASPARENTI CON FILO IN METALLO
DRAIN TRASPARENT HOSES WITH METAL WIRE

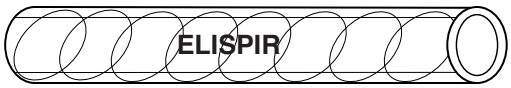

700031 Ø 12x18
700031/14 Ø 14x20
700031/16 Ø 16x23
700031/18 Ø 18x25

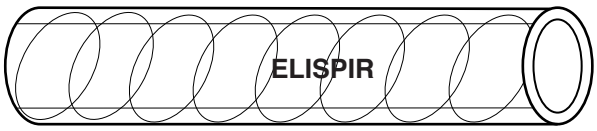

700037 Ø 20x26
700037/25 Ø 25x33
700037/30 Ø 30x38

TUBI SCARICO NERI CON FILO IN METALLO
DRAIN BLACK HOSES WITH METAL WIRE

700060/15 Ø 15x22

RAME - COPPER

M701007 Ø 2x4
M701006 Ø 4x6
M701087 Ø 6x8
M701084 Ø 8x10
M701085 Ø 10x12

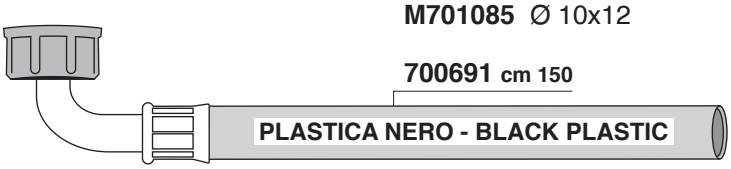

700691 cm 150

PLASTICA NERO - BLACK PLASTIC

LEVA/LEVER 180°

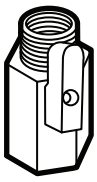

700169/LM
3/8M-3/8F

700169/M
3/8M-3/8F

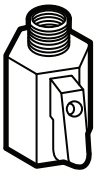

700170/V
1/4M-1/4F

700078 8-12
700004 12-22
700088 20-32
700079 25-40
700080 30-45

TUBO SCARICO - DRAIN HOSES
PLASTICA NERO - BLACK PLASTIC

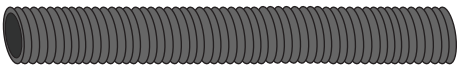

560058 Ø 14x18
560059 Ø 16x20
560060 Ø 20x24

RICAMBI UNIVERSALI Tav. 61

COMPONENTI BOILER

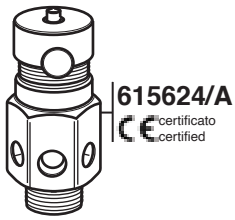
615624/A
CE certificato certified
3/8

524555

615625/A
CE certificato certified
3/8

524555

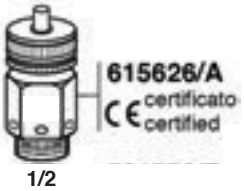
615626/A
CE certificato certified
1/2

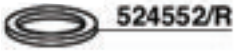
524552/R

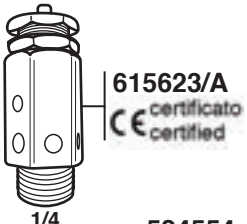
615623/A
CE certificato certified
1/4

524554

700217
3/8

524555

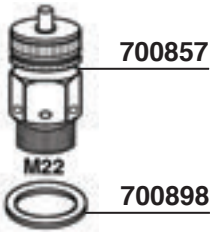
700857
M22
700898

618968
1/4

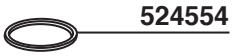
524554

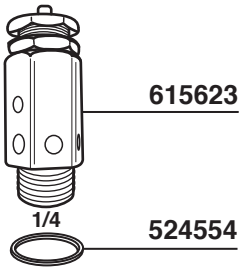
615623
1/4
524554

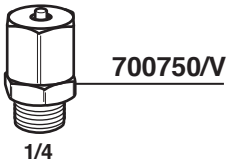
700750/V
1/4

524554

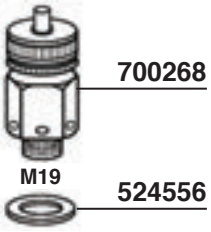
700268
M19
524556

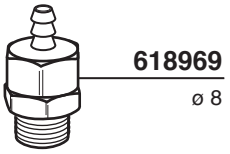
618969
ø 8
1/4

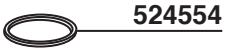
524554

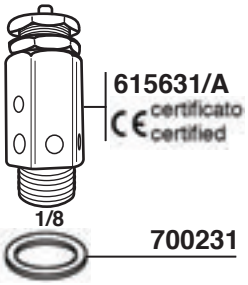
615631/A
CE certificato certified
1/8
700231

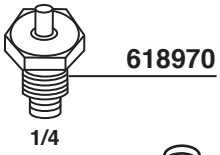
618970
1/4

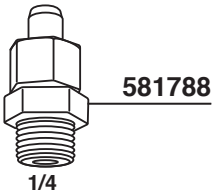
581788
1/4

700375
3/8
524555

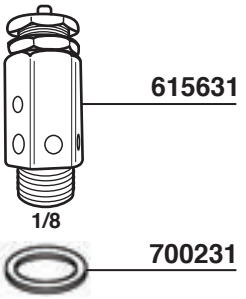
615631
1/8
700231

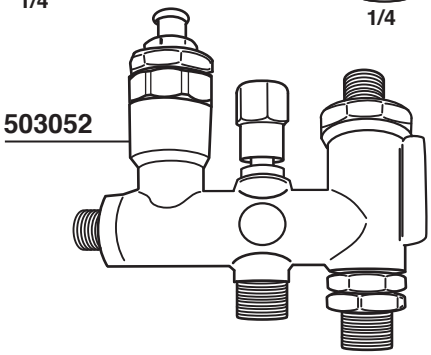
503052

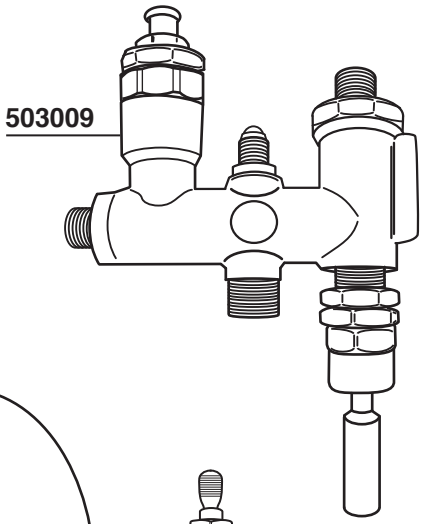
503009

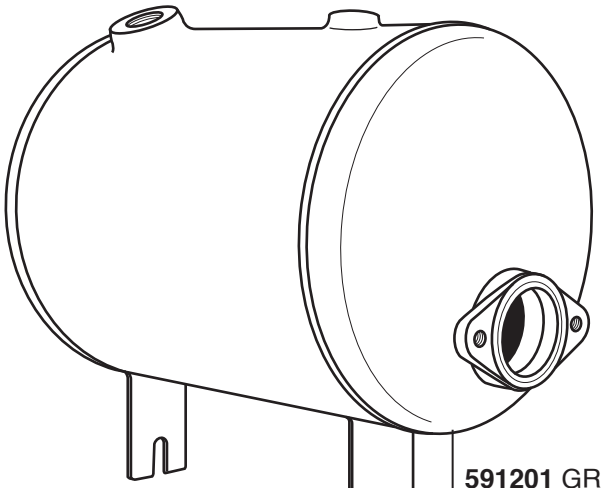
BOILER RAME E61
E61 COPPER BOILER

591201 GR1
591202 GR2
591203 GR3

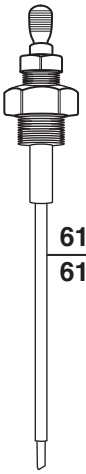
612601 120 mm
612601/L 140 mm

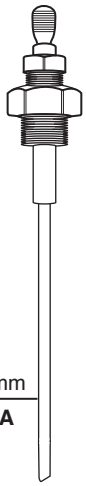
503005 165 mm
SENZA GUAINA

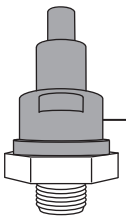
618967

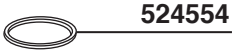
524554

Sipresso
615000 Ø58,3 mm
615003 Ø54 mm La San Marco
Pressino Automatico di precisione, Grigio.
Precision Automatic Coffee Tamper, Grey.
Dimensioni / *Dimension:*
W132 mm x D212 mm x H312 mm

Sipresso
615001 Ø58,3 mm
615004 Ø54 mm La San Marco
Pressino Automatico di precisione, Bianco Opaco.
Precision Automatic Coffee Tamper, White Matt.
Dimensioni / *Dimension:*
W132 mm x D212 mm x H312 mm

Sipresso
615002 Ø58,3 mm
615005 Ø54 mm La San Marco
Pressino Automatico di precisione, Nero Opaco.
Precision Automatic Coffee Tamper, Black Matt.
Dimensioni / *Dimension:*
W132 mm x D212 mm x H312 mm

SPROPARTS

3525 Stone Way N.
Ste B6
Seattle, WA 98103
United States
Phone 425-608-0640

www.sproparts.com • orders@sproparts.com

9 900000 146306